DIRECTPATH™ STEREO LINE DRIVER

FEATURES

- **Space Saving Package**
  - **20-Pin, 4 mm × 4 mm Thin QFN, Thermally Optimized PowerPAD™ Package**
- **Ground-Referenced Outputs Eliminate DC-Blocking Capacitor**
  - **Reduce Board Area**
  - **Reduce Component Cost**
  - **Improve THD+N Performance**
  - **No Degradation of Low-Frequency Response Due to Output Capacitors**
- **Wide Power Supply Range: 1.8 V to 4.5 V**
- **2 Vrms/Ch Output Voltage into 600 Ω at 3.3 V**
- **Independent Right and Left Channel Shutdown Control**
- **Short-Circuit and Thermal Protection**
- **Pop Reduction Circuitry**

APPLICATIONS

- **Set-top boxes**
- **CD / DVD Players**
- **DVD-Receivers**
- **HTIB**
- **PDP / LCD TV's**

DESCRIPTION

The DRV600 is a stereo line driver designed to allow the removal of the output dc-blocking capacitors for reduced component count and cost. The DRV600 is ideal for single supply electronics where size and cost are critical design parameters.

The DRV600 is capable of driving 2 Vrms into a 600-Ω load at 3.3 V. The DRV600 has a fixed gain of –1.5 V/V and line outputs that has ±8-kV IEC ESD protection. The DRV600 has independent shutdown control for the right and left audio channels.

The DRV600 is available in a 4 mm × 4 mm Thin QFN package.

Please be aware that an important notice concerning availability, standard warranty, and use in critical applications of Texas Instruments semiconductor products and disclaimers thereto appears at the end of this data sheet.

DIRECTPATH, PowerPAD, DirectPath are trademarks of Texas Instruments.

PRODUCTION DATA information is current as of publication date. Products conform to specifications per the terms of the Texas Instruments standard warranty. Production processing does not necessarily include testing of all parameters.

Copyright © 2007, Texas Instruments Incorporated

These devices have limited built-in ESD protection. The leads should be shorted together or the device placed in conductive foam during storage or handling to prevent electrostatic damage to the MOS gates.

RTJ (QFN) PACKAGE
(TOP VIEW)

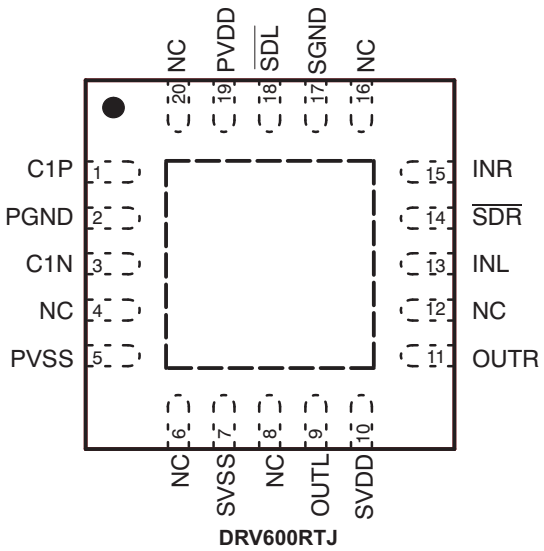

DRV600RTJ

NC – No internal connection

TERMINAL FUNCTIONS

TERMINAL		I/O	DESCRIPTION
NAME	QFN		
C1P	1	I/O	Charge pump flying capacitor positive terminal
PGND	2	I	Power ground, connect to ground.
C1N	3	I/O	Charge pump flying capacitor negative terminal
NC	4, 6, 8, 12, 16, 20		No connection
PVSS	5	O	Output from charge pump.
SVSS	7	I	Amplifier negative supply, connect to PVSS via star connection.
OUTL	9	O	Left audio channel output signal
SVDD	10	I	Amplifier positive supply, connect to PVDD via star connection.
OUTR	11	O	Right audio channel output signal
INL	13	I	Left audio channel input signal
$\overline{\text{SDR}}$	14	I	Right channel shutdown, active low logic.
INR	15	I	Right audio channel input signal
SGND	17	I	Signal ground, connect to ground.
$\overline{\text{SDL}}$	18	I	Left channel shutdown, active low logic.
PVDD	19	I	Supply voltage, connect to positive supply.
Exposed Pad			Exposed pad must be soldered to a floating plane. Do NOT connect to power or ground.

ABSOLUTE MAXIMUM RATINGS(1)

over operating free-air temperature range, T_A = 25°C (unless otherwise noted)

		VALUE / UNIT
	Supply voltage, AVDD, PVDD	–0.3 V to 5.5 V
V_I	Input voltage	V_{SS} - 0.3 V to V_{DD} + 0.3 V
$R_{(Load)}$	Minimum load impedance	≥ 100 Ω
T_A	Operating free-air temperature range	–40°C to 85°C
T_J	Operating junction temperature range	–40°C to 150°C
T_{stg}	Storage temperature range	–65°C to 85°C

(1) Stresses beyond those listed under *absolute maximum ratings* may cause permanent damage to the device. These are stress ratings only, and functional operation of the device at these or any other conditions beyond those indicated under *recommended operating conditions* is not implied. Exposure to absolute-maximum-rated conditions for extended periods may affect device reliability.

AVAILABLE OPTIONS

T_A	PACKAGED DEVICES(1)	PART NUMBER	SYMBOL
–40°C to 85°C	20-pin, 4 mm × 4 mm QFN	DRV600RTJ(2)	AKQ

(1) For the most current package and ordering information, see the Package Option Addendum at the end of this document, or see the TI website at www.ti.com.
(2) The RTJ package is only available taped and reeled. To order, add the suffix “R” to the end of the part number for a reel of 3000, or add the suffix “T” to the end of the part number for a reel of 250 (e.g., DRV600RTJR).

RECOMMENDED OPERATING CONDITIONS

			MIN	MAX	UNIT
V_{SS}	Supply voltage, AVDD, PVDD		1.8	4.5(1)	V
V_{IH}	High-level input voltage	$\overline{SDL}$, $\overline{SDR}$	1.5		V
V_{IL}	Low-level input voltage	$\overline{SDL}$, $\overline{SDR}$		0.5	V
T_A	Operating free-air temperature		–40	85	°C

(1) Device can shut down for V_{DD} > 4.5 V to prevent damage to the device.

ELECTRICAL CHARACTERISTICS

T_A = 25°C (unless otherwise noted)

PARAMETER		TEST CONDITIONS	MIN	TYP	MAX	UNIT
$\|V_{OS}\|$	Output offset voltage	V_{DD} = 1.8 V to 4.5 V, Inputs grounded			8	mV
PSRR	Power Supply Rejection Ratio	V_{DD} = 1.8 V to 4.5 V	–69	–80		dB
V_{OH}	High-level output voltage	V_{DD} = 3.3 V, R_L = 600 Ω	3.10			V
V_{OL}	Low-level output voltage	V_{DD} = 3.3 V, R_L = 600 Ω			–3.05	V
$\|I_{IH}\|$	High-level input current ($\overline{SDL}$, $\overline{SDR}$)	V_{DD} = 4.5 V, V_I = V_{DD}			1	µA
$\|I_{IL}\|$	Low-level input current ($\overline{SDL}$, $\overline{SDR}$)	V_{DD} = 4.5 V, V_I = 0 V			1	µA
I_{DD}	Supply Current	V_{DD} = 1.8 V, No load, $\overline{SDL}$= $\overline{SDR}$ = V_{DD}		5.3	6.5	mA
		V_{DD} = 3.3 V, No load, $\overline{SDL}$ = $\overline{SDR}$ = V_{DD}		6.7	8.2	
		V_{DD} = 4.5 V, No load, $\overline{SDL}$ = $\overline{SDR}$ = V_{DD}		8	10	
		Shutdown mode, V_{DD} = 1.8 V to 4.5 V			1	µA

OPERATING CHARACTERISTICS

V_{DD} = 3.3 V , T_A = 25°C, R_L = 600 Ω (unless otherwise noted)

PARAMETER		TEST CONDITIONS	MIN	TYP	MAX	UNIT
V_O	Output Voltage(Outputs In Phase)	THD = 1%, V_{DD} = 3.3 V, f = 1 kHz		2.1		V_{RMS}
		THD = 1%, V_{DD} = 4.5 V, f = 1 kHz		2.7		
		THD = 1%, V_{DD} = 4.5 V, f = 1 kHz, R_L = 100 kΩ		2.8		
THD+N	Total harmonic distortion plus noise	V_O = 2 Vrms, f = 1 kHz		0.04%		
		V_O = 2 Vrms, f = 20 kHz		0.07%		
	Crosstalk	V_O = 2 Vrms, f = 1 kHz		-80		dB
k_{SVR}	Supply ripple rejection ratio	200-mV_{pp} ripple, f = 217 Hz		–82.5		dB
		200-mV_{pp} ripple, f = 1 kHz		–70.4		
		200-mV_{pp} ripple, f = 20 kHz		–45.1		
A_v	Closed-loop voltage gain		-1.45	–1.5	–1.55	V/V
ΔA_v	Gain matching			1%		
	Slew rate			2.2		V/µs
	Maximum capacitive load			400		pF
V_n	Noise output voltage	22-kHz filter, A-weighted		7		µVrms
	Electrostatic discharge, IEC	OUTR, OUTL		±8		kV
f_{osc}	Charge pump switching frequency		280	320	420	kHz
	Start-up time from shutdown			450		µs
	Input impedance		12	15	18	kΩ
SNR	Signal-to-noise ratio	V_o = 2 Vrms (THD+N = 0.1%), 22-kHz BW, A-weighted		109		dB
	Thermal shutdown	Threshold	150		170	°C
		Hysteresis		15		°C

Functional Block Diagram

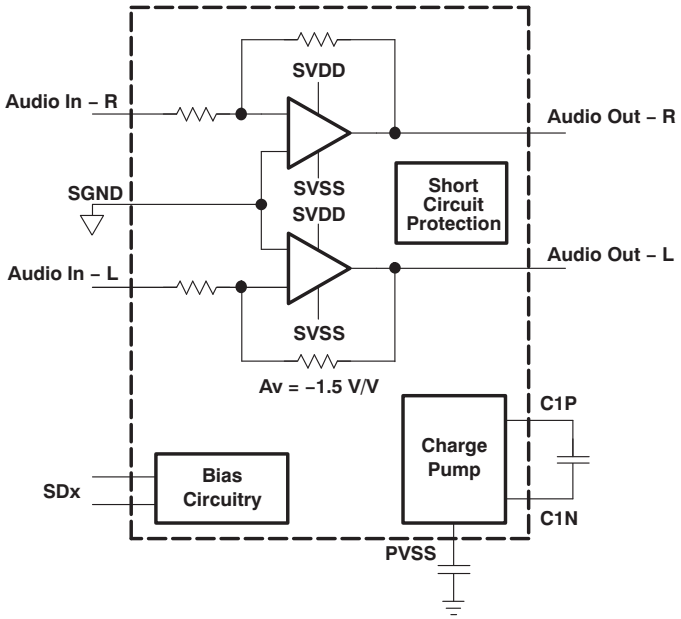

TYPICAL CHARACTERISTICS

$C_{(PUMP)} = C_{(PVSS)} = 2.2\ \mu F$, $C_{IN} = 1\ \mu F$ (unless otherwise noted)

Table of Graphs

		FIGURE
Total harmonic distortion + noise	vs Output Voltage	1-6
Total harmonic distortion + noise	vs Frequency	7-8
Quiescent supply current	vs Supply voltage	9
Output spectrum		10
Gain and phase	vs Frequency	11-12

TOTAL HARMONIC DISTORTION + NOISE vs OUTPUT VOLTAGE

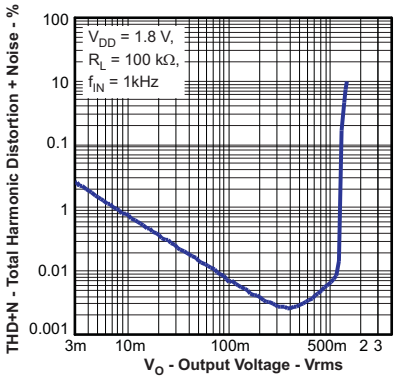

Figure 1.

TOTAL HARMONIC DISTORTION + NOISE vs OUTPUT VOLTAGE

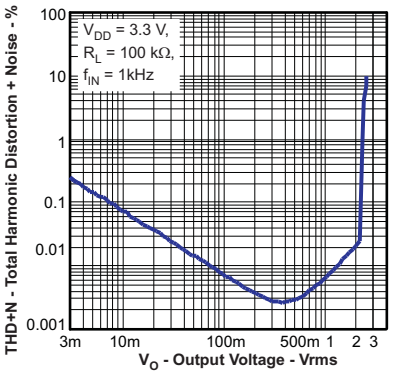

Figure 2.

TOTAL HARMONIC DISTORTION + NOISE vs OUTPUT VOLTAGE

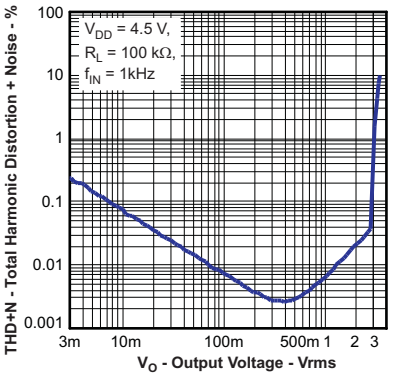

Figure 3.

TOTAL HARMONIC DISTORTION + NOISE vs OUTPUT VOLTAGE

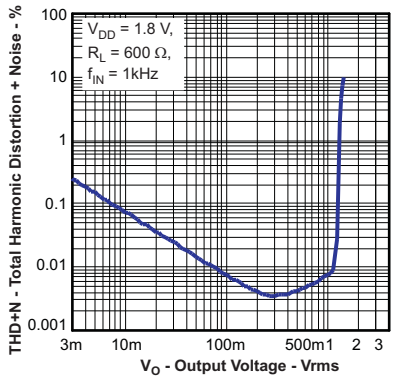

Figure 4.

TOTAL HARMONIC DISTORTION + NOISE vs OUTPUT VOLTAGE

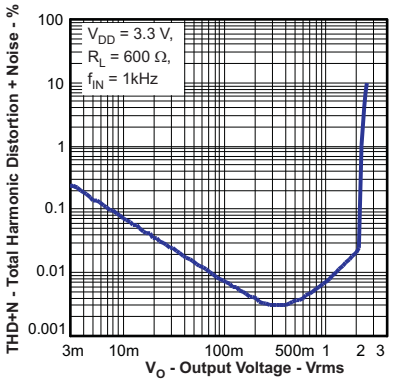

Figure 5.

TOTAL HARMONIC DISTORTION + NOISE vs OUTPUT VOLTAGE

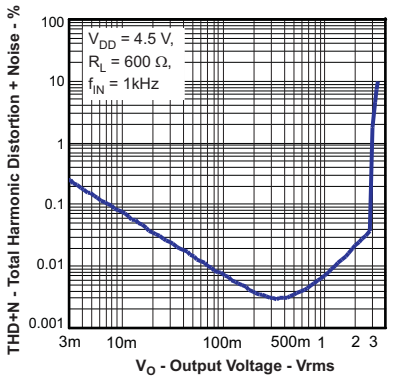

Figure 6.

TOTAL HARMONIC DISTORTION + NOISE vs FREQUENCY

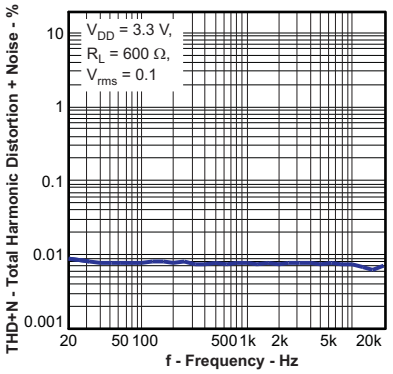

Figure 7.

TOTAL HARMONIC DISTORTION + NOISE vs FREQUENCY

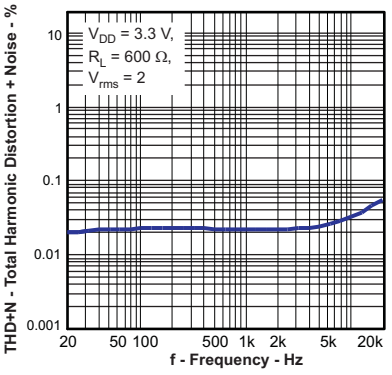

Figure 8.

QUIESCENT SUPPLY CURRENT vs SUPPLY VOLTAGE

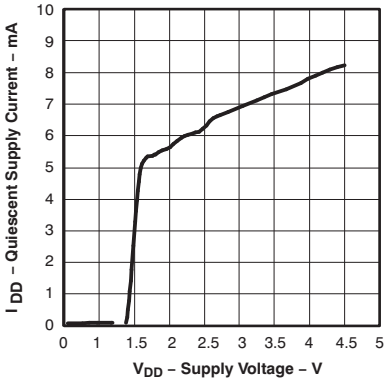

Figure 9.

FFT vs FREQUENCY

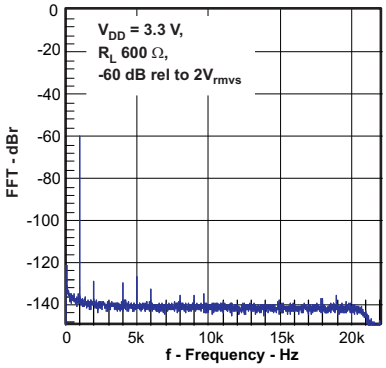

Figure 10.

GAIN vs FREQUENCY

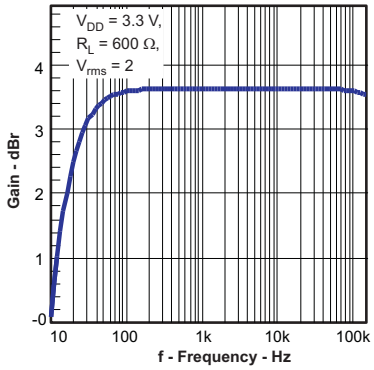

Figure 11.

PHASE vs FREQUENCY

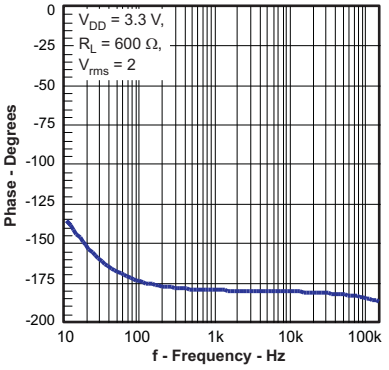

Figure 12.

APPLICATION INFORMATION

Line Driver Amplifiers

Single-supply Line Driver amplifiers typically require dc-blocking capacitors. The top drawing in Figure 13 illustrates the conventional Line Driver amplifier connection to the load and output signal.

DC blocking capacitors are often large in value. The line load (typical resistive values of 600 Ω to 10 kΩ) combine with the dc blocking capacitors to form a high-pass filter. Equation 1 shows the relationship between the load impedance (R_L), the capacitor (C_O), and the cutoff frequency (f_C).

$$f_c = \frac{1}{2\pi R_L C_O} \quad (1)$$

C_O can be determined using Equation 2, where the load impedance and the cutoff frequency are known.

$$C_O = \frac{1}{2\pi R_L f_c} \quad (2)$$

If f_C is low, the capacitor must then have a large value because the load resistance is small. Large capacitance values require large package sizes. Large package sizes consume PCB area, stand high above the PCB, increase cost of assembly, and can reduce the fidelity of the audio output signal.

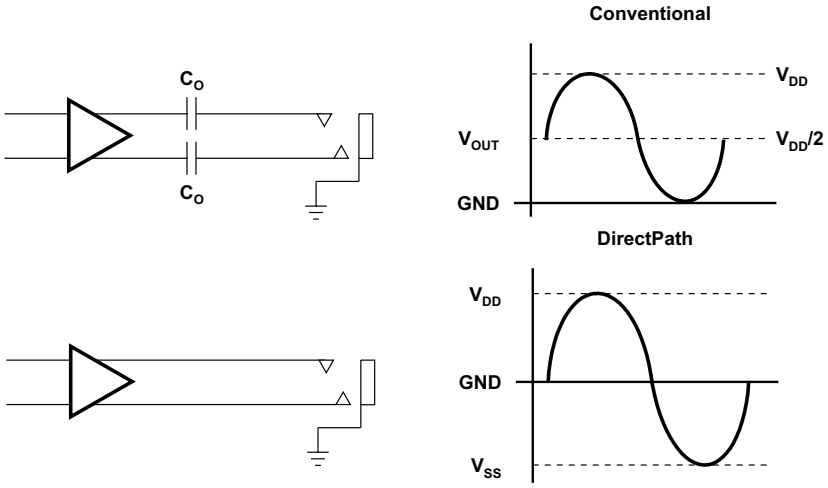

Figure 13. Amplifier Applications

The DirectPath™ amplifier architecture operates from a single supply but makes use of an internal charge pump to provide a negative voltage rail. Combining the user provided positive rail and the negative rail generated by the IC, the device operates in what is effectively a split supply mode. The output voltages are now centered at zero volts with the capability to swing to the positive rail or negative rail. The DirectPath™ amplifier requires no output dc blocking capacitors. The bottom block diagram and waveform of Figure 13 illustrate the ground-referenced Line Driver architecture. This is the architecture of the DRV600.

Input-Blocking Capacitors

DC input-blocking capacitors are required to be added in series with the audio signal into the input pins of the DRV600. These capacitors block the DC portion of the audio source and allow the DRV600 inputs to be properly biased to provide maximum performance.

These capacitors form a high-pass filter with the input impedance of the DRV600. The cutoff frequency is calculated using Equation 3. For this calculation, the capacitance used is the input-blocking capacitor and the resistance is the input impedance of the DRV600. Because the gain of the DRV600 is fixed, the input impedance remains a constant value. Using the input impedance value from the operating characteristics table, the frequency and/or capacitance can be determined when one of the two values are given.

$$fc_{IN} = \frac{1}{2\pi R_{IN} C_{IN}} \quad \text{or} \quad C_{IN} = \frac{1}{2\pi fc_{IN} R_{IN}} \quad (3)$$

APPLICATION INFORMATION (continued)

Charge Pump Flying Capacitor and PVSS Capacitor

The charge pump flying capacitor serves to transfer charge during the generation of the negative supply voltage. The PVSS capacitor must be at least equal to the charge pump capacitor in order to allow maximum charge transfer. Low ESR capacitors are an ideal selection, and a value of 2.2 µF is typical. Capacitor values that are smaller than 2.2 µF can be used, but the maximum output power is reduced and the device may not operate to specifications.

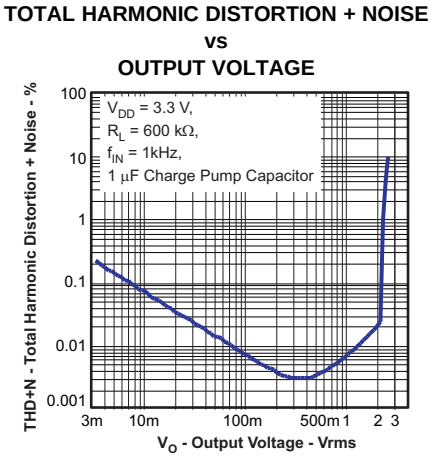

Figure 14.

Decoupling Capacitors

The DRV600 is a DirectPath™ Line Driver amplifier that require adequate power supply decoupling to ensure that the noise and total harmonic distortion (THD) are low. A good low equivalent-series-resistance (ESR) ceramic capacitor, typically 2.2 µF, placed as close as possible to the device V_{DD} lead works best. Placing this decoupling capacitor close to the DRV600 is important for the performance of the amplifier. For filtering lower frequency noise signals, a 10-µF or greater capacitor placed near the audio power amplifier would also help, but it is not required in most applications because of the high PSRR of this device.

Supply Voltage Limiting At 4.5 V

The DRV600 have a built-in charge pump which serves to generate a negative rail for the line driver. Because the line driver operates from a positive voltage and negative voltage supply, circuitry has been implemented to protect the devices in the amplifier from an overvoltage condition. Once the supply is above 4.5 V, the DRV600 can shut down in an overvoltage protection mode to prevent damage to the device. The DRV600 resume normal operation once the supply is reduced to 4.5 V or lower.

Layout Recommendations

Exposed Pad On DRV600RTJ Package

The exposed metal pad on the DRV600RTJ package must be soldered down to a pad on the PCB in order to maintain reliability. *The pad on the PCB should be allowed to float and not be connected to ground or power*. Connecting this pad to power or ground prevents the device from working properly because it is connected internally to PVSS.

SGND and PGND Connections

The SGND and PGND pins of the DRV600 must be routed separately back to the decoupling capacitor in order to provide proper device operation. If the SGND and PGND pins are connected directly to each other, the part functions without risk of failure, but the noise and THD performance do not meet the specifications.

APPLICATION INFORMATION (continued)

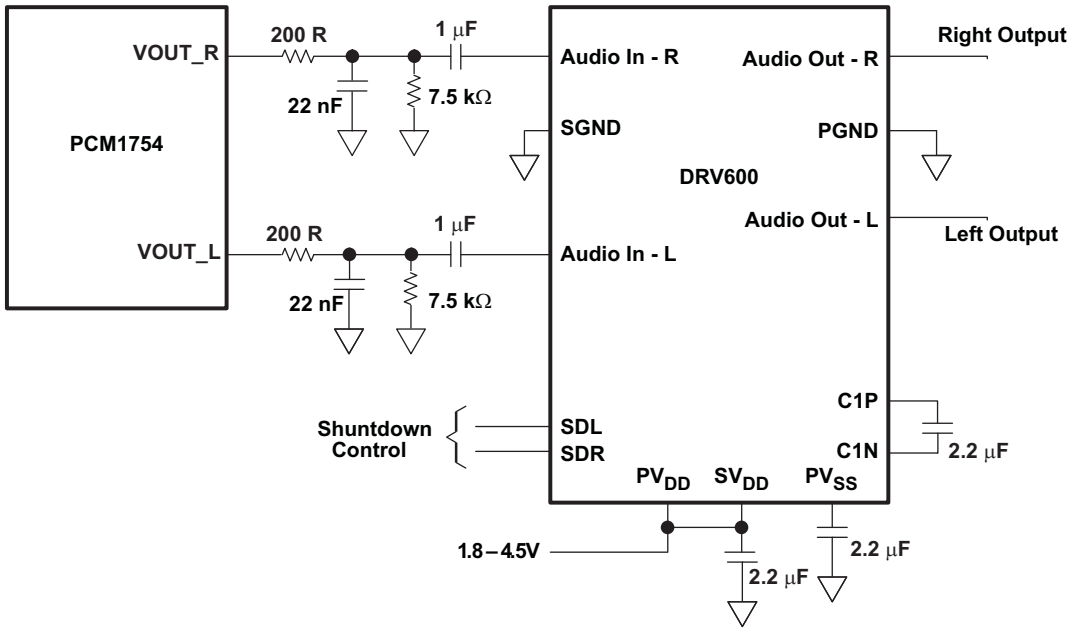

Figure 15. Application Circuit

PACKAGING INFORMATION

Orderable Device	Status (1)	Package Type	Package Drawing	Pins	Package Qty	Eco Plan (2)	Lead/Ball Finish (6)	MSL Peak Temp (3)	Op Temp (°C)	Device Marking (4/5)	Samples
DRV600RTJR	ACTIVE	QFN	RTJ	20	3000	Green (RoHS & no Sb/Br)	NIPDAU	Level-2-260C-1 YEAR	-40 to 85	AKQ	Samples

(1) The marketing status values are defined as follows:
ACTIVE: Product device recommended for new designs.
LIFEBUY: TI has announced that the device will be discontinued, and a lifetime-buy period is in effect.
NRND: Not recommended for new designs. Device is in production to support existing customers, but TI does not recommend using this part in a new design.
PREVIEW: Device has been announced but is not in production. Samples may or may not be available.
OBSOLETE: TI has discontinued the production of the device.

(2) **RoHS:** TI defines "RoHS" to mean semiconductor products that are compliant with the current EU RoHS requirements for all 10 RoHS substances, including the requirement that RoHS substance do not exceed 0.1% by weight in homogeneous materials. Where designed to be soldered at high temperatures, "RoHS" products are suitable for use in specified lead-free processes. TI may reference these types of products as "Pb-Free".
RoHS Exempt: TI defines "RoHS Exempt" to mean products that contain lead but are compliant with EU RoHS pursuant to a specific EU RoHS exemption.
Green: TI defines "Green" to mean the content of Chlorine (Cl) and Bromine (Br) based flame retardants meet JS709B low halogen requirements of <=1000ppm threshold. Antimony trioxide based flame retardants must also meet the <=1000ppm threshold requirement.

(3) MSL, Peak Temp. - The Moisture Sensitivity Level rating according to the JEDEC industry standard classifications, and peak solder temperature.

(4) There may be additional marking, which relates to the logo, the lot trace code information, or the environmental category on the device.

(5) Multiple Device Markings will be inside parentheses. Only one Device Marking contained in parentheses and separated by a "~" will appear on a device. If a line is indented then it is a continuation of the previous line and the two combined represent the entire Device Marking for that device.

(6) Lead/Ball Finish - Orderable Devices may have multiple material finish options. Finish options are separated by a vertical ruled line. Lead/Ball Finish values may wrap to two lines if the finish value exceeds the maximum column width.

Important Information and Disclaimer: The information provided on this page represents TI's knowledge and belief as of the date that it is provided. TI bases its knowledge and belief on information provided by third parties, and makes no representation or warranty as to the accuracy of such information. Efforts are underway to better integrate information from third parties. TI has taken and continues to take reasonable steps to provide representative and accurate information but may not have conducted destructive testing or chemical analysis on incoming materials and chemicals. TI and TI suppliers consider certain information to be proprietary, and thus CAS numbers and other limited information may not be available for release.

In no event shall TI's liability arising out of such information exceed the total purchase price of the TI part(s) at issue in this document sold by TI to Customer on an annual basis.

TAPE AND REEL INFORMATION

REEL DIMENSIONS

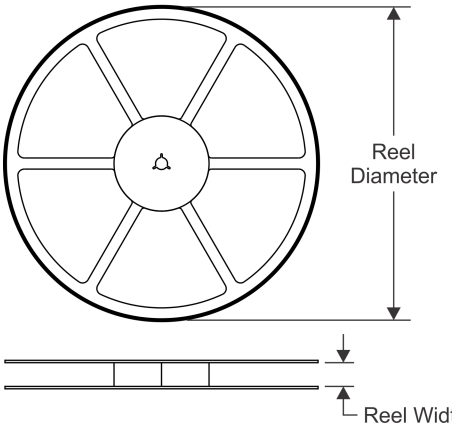

TAPE DIMENSIONS

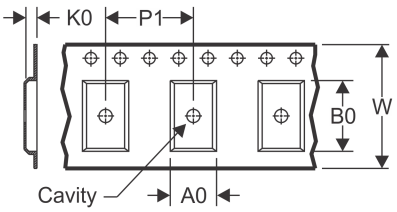

A0	Dimension designed to accommodate the component width
B0	Dimension designed to accommodate the component length
K0	Dimension designed to accommodate the component thickness
W	Overall width of the carrier tape
P1	Pitch between successive cavity centers

QUADRANT ASSIGNMENTS FOR PIN 1 ORIENTATION IN TAPE

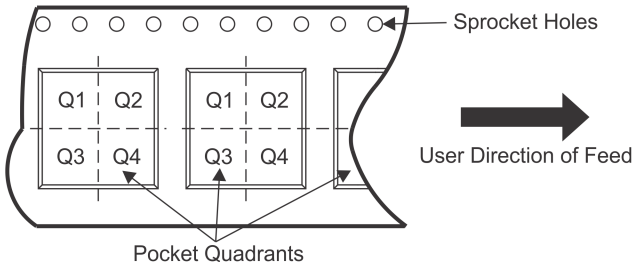

*All dimensions are nominal

Device	Package Type	Package Drawing	Pins	SPQ	Reel Diameter (mm)	Reel Width W1 (mm)	A0 (mm)	B0 (mm)	K0 (mm)	P1 (mm)	W (mm)	Pin1 Quadrant
DRV600RTJR	QFN	RTJ	20	3000	330.0	12.4	4.25	4.25	1.15	8.0	12.0	Q2

TAPE AND REEL BOX DIMENSIONS

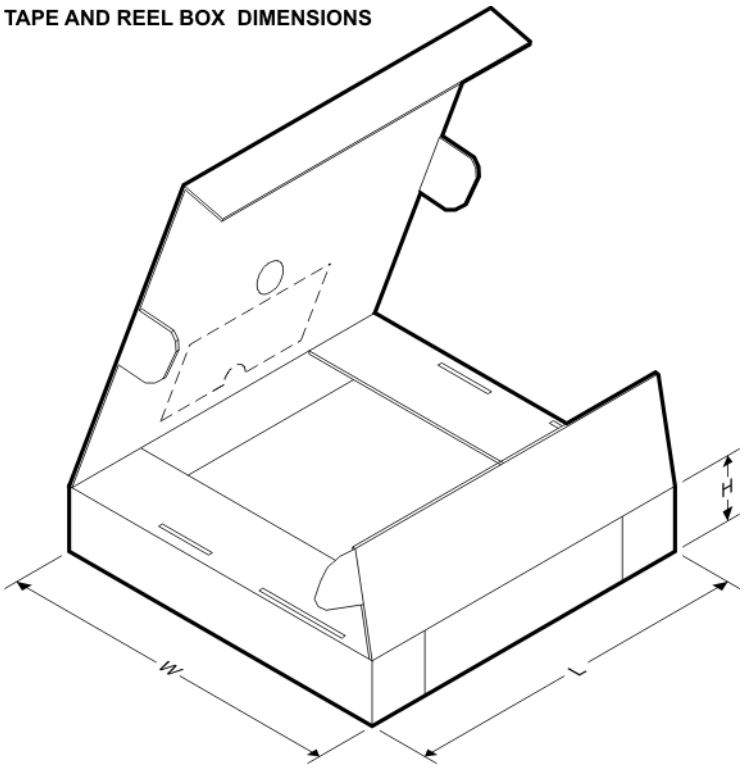

*All dimensions are nominal

Device	Package Type	Package Drawing	Pins	SPQ	Length (mm)	Width (mm)	Height (mm)
DRV600RTJR	QFN	RTJ	20	3000	367.0	367.0	35.0

RTJ (S–PWQFN–N20) PLASTIC QUAD FLATPACK NO–LEAD

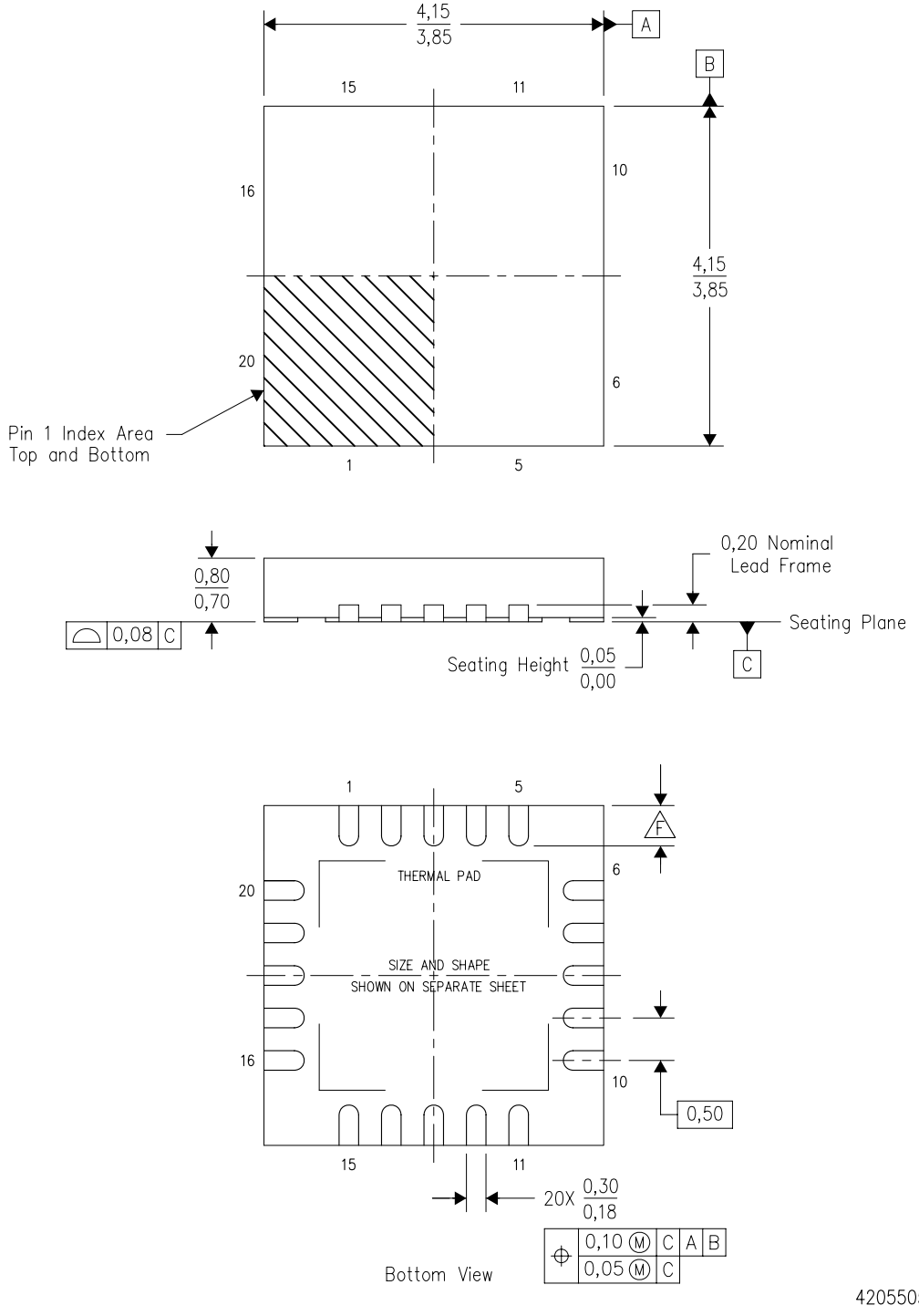

NOTES:
A. All linear dimensions are in millimeters. Dimensioning and tolerancing per ASME Y14.5–1994.
B. This drawing is subject to change without notice.
C. QFN (Quad Flatpack No–Lead) package configuration.
D. The package thermal pad must be soldered to the board for thermal and mechanical performance.
E. See the additional figure in the Product Data Sheet for details regarding the exposed thermal pad features and dimensions.
F. Check thermal pad mechanical drawing in the product datasheet for nominal lead length dimensions.

RTJ (S–PWQFN–N20) PLASTIC QUAD FLATPACK NO–LEAD

THERMAL INFORMATION

This package incorporates an exposed thermal pad that is designed to be attached directly to an external heatsink. The thermal pad must be soldered directly to the printed circuit board (PCB). After soldering, the PCB can be used as a heatsink. In addition, through the use of thermal vias, the thermal pad can be attached directly to the appropriate copper plane shown in the electrical schematic for the device, or alternatively, can be attached to a special heatsink structure designed into the PCB. This design optimizes the heat transfer from the integrated circuit (IC).

For information on the Quad Flatpack No–Lead (QFN) package and its advantages, refer to Application Report, QFN/SON PCB Attachment, Texas Instruments Literature No. SLUA271. This document is available at www.ti.com.

The exposed thermal pad dimensions for this package are shown in the following illustration.

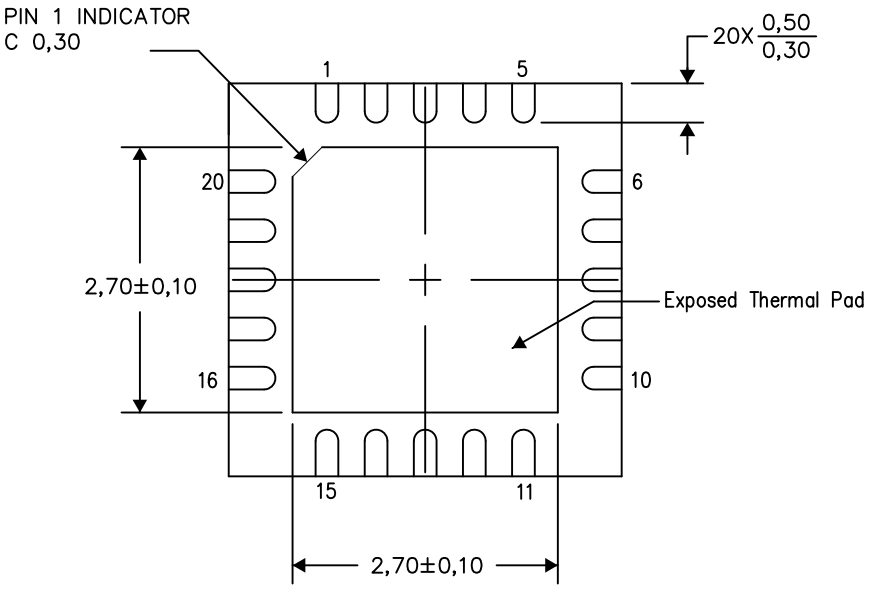

Bottom View

Exposed Thermal Pad Dimensions

4206256–2/V 05/15

NOTE: All linear dimensions are in millimeters

RTJ (S–PWQFN–N20) PLASTIC QUAD FLATPACK NO–LEAD

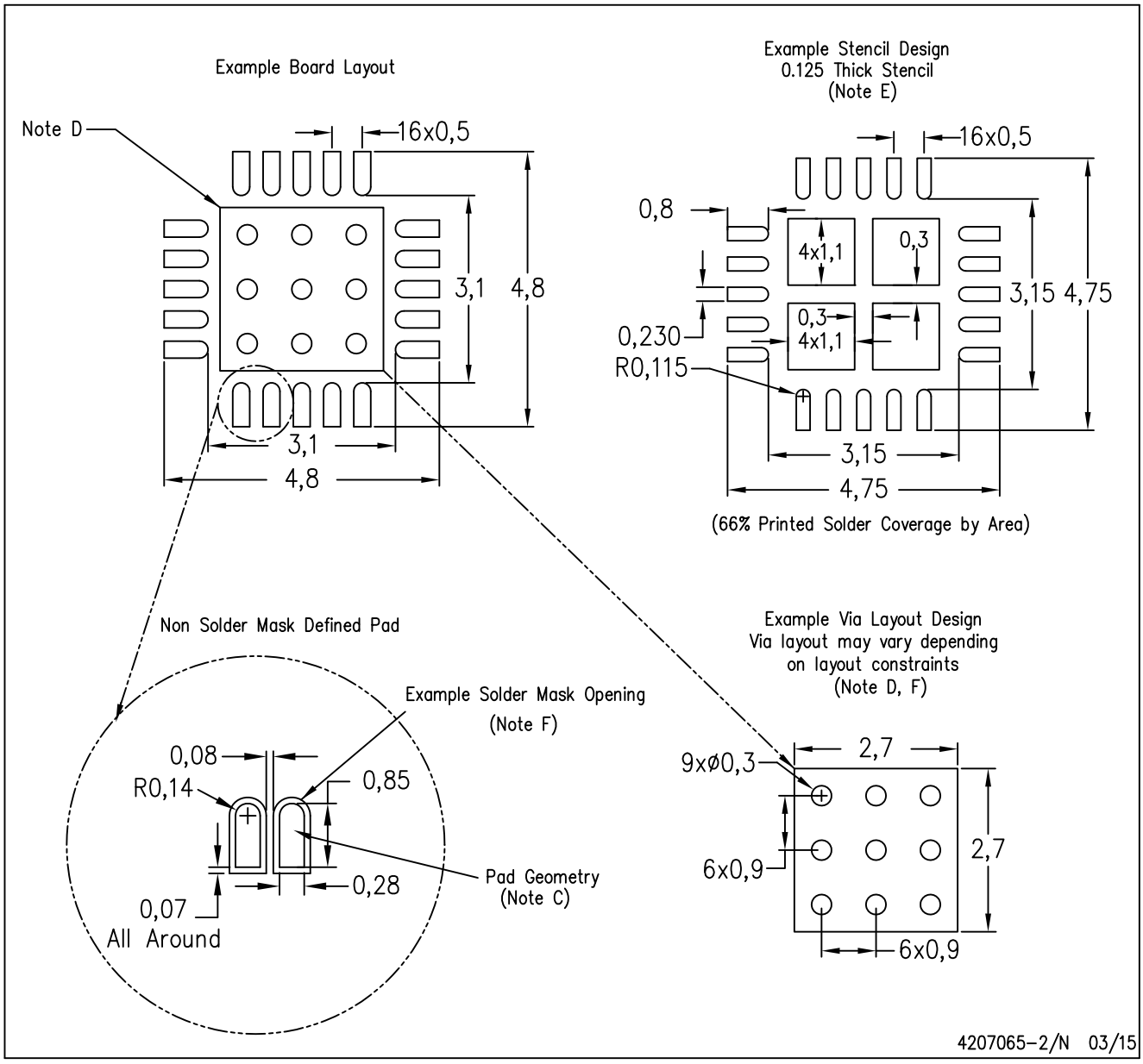

NOTES:
A. All linear dimensions are in millimeters.
B. This drawing is subject to change without notice.
C. Publication IPC–7351 is recommended for alternate designs.
D. This package is designed to be soldered to a thermal pad on the board. Refer to Application Note, Quad Flat–Pack Packages, Texas Instruments Literature No. SLUA271, and also the Product Data Sheets for specific thermal information, via requirements, and recommended board layout. These documents are available at www.ti.com <http://www.ti.com>.
E. Laser cutting apertures with trapezoidal walls and also rounding corners will offer better paste release. Customers should contact their board assembly site for stencil design recommendations. Refer to IPC 7525 for stencil design considerations.
F. Customers should contact their board fabrication site for recommended solder mask tolerances and via tenting recommendations for vias placed in the thermal pad.

IMPORTANT NOTICE AND DISCLAIMER

TI PROVIDES TECHNICAL AND RELIABILITY DATA (INCLUDING DATASHEETS), DESIGN RESOURCES (INCLUDING REFERENCE DESIGNS), APPLICATION OR OTHER DESIGN ADVICE, WEB TOOLS, SAFETY INFORMATION, AND OTHER RESOURCES “AS IS” AND WITH ALL FAULTS, AND DISCLAIMS ALL WARRANTIES, EXPRESS AND IMPLIED, INCLUDING WITHOUT LIMITATION ANY IMPLIED WARRANTIES OF MERCHANTABILITY, FITNESS FOR A PARTICULAR PURPOSE OR NON-INFRINGEMENT OF THIRD PARTY INTELLECTUAL PROPERTY RIGHTS.

These resources are intended for skilled developers designing with TI products. You are solely responsible for (1) selecting the appropriate TI products for your application, (2) designing, validating and testing your application, and (3) ensuring your application meets applicable standards, and any other safety, security, or other requirements. These resources are subject to change without notice. TI grants you permission to use these resources only for development of an application that uses the TI products described in the resource. Other reproduction and display of these resources is prohibited. No license is granted to any other TI intellectual property right or to any third party intellectual property right. TI disclaims responsibility for, and you will fully indemnify TI and its representatives against, any claims, damages, costs, losses, and liabilities arising out of your use of these resources.

TI’s products are provided subject to TI’s Terms of Sale (www.ti.com/legal/termsofsale.html) or other applicable terms available either on ti.com or provided in conjunction with such TI products. TI’s provision of these resources does not expand or otherwise alter TI’s applicable warranties or warranty disclaimers for TI products.

Mailing Address: Texas Instruments, Post Office Box 655303, Dallas, Texas 75265
Copyright © 2020, Texas Instruments Incorporated