DRV5015 Low-Voltage, High-Sensitivity, Digital-Latch Hall Effect Sensor

1 Features

- Digital-latch hall effect sensor
- High magnetic sensitivity:
  - DRV5015A1: ±0.7 mT (typical)
  - DRV5015A2: ±1.8 mT (typical)
  - DRV5015A3: ±1.8 mT (inverted, typical)
- Integrated hysteresis
- Fast 30-kHz sensing bandwidth
- 2.5-V to 5.5-V operating V_{CC} range
- Open-drain output capable of 20-mA output current
- Operating temperature range: –40°C to +125°C

2 Applications

- Brushless dc motor sensors
- Incremental rotary encoding:
  - Brushed dc motor feedback
  - Motor speed (tachometer)
  - Mechanical travel
  - Fluid measurement
  - Human interface knobs
  - Wheel speed
- E-bikes

3 Description

The DRV5015 is a low-voltage digital-latch Hall effect sensor designed for high-speed and high-temperature motor applications. Operating from a 2.5-V to 5.5-V power supply, the device senses magnetic flux density and presents a digital output based on predefined magnetic thresholds.

Alternating north and south magnetic poles are required to toggle the output and integrated hysteresis provides robust switching.

The device is offered in two magnetic threshold options and an inverted output option. The high magnetic sensitivity provides flexibility in low-cost magnet selection and component placement.

The device performs consistently across a wide ambient temperature range of –40°C to +125°C.

Device Information(1)

PART NUMBER	PACKAGE	BODY SIZE (NOM)
DRV5015	SOT-23 (3)	2.92 mm × 1.30 mm

(1) For all available packages, see the package option addendum at the end of the data sheet.

Typical Schematic

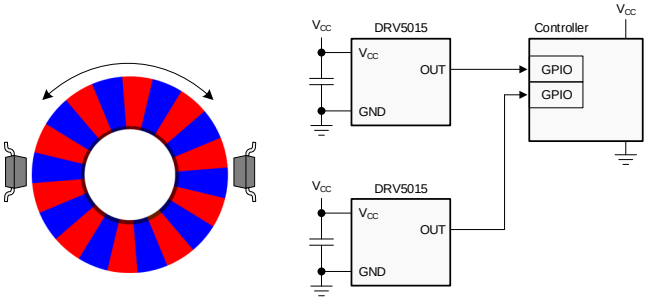

Magnetic Response

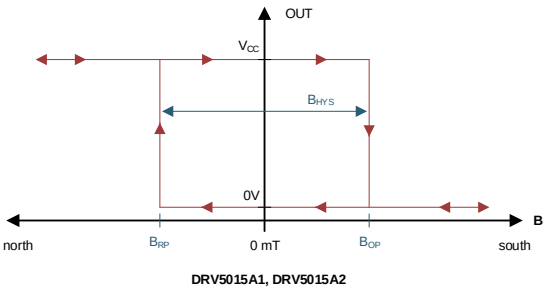

DRV5015A1, DRV5015A2

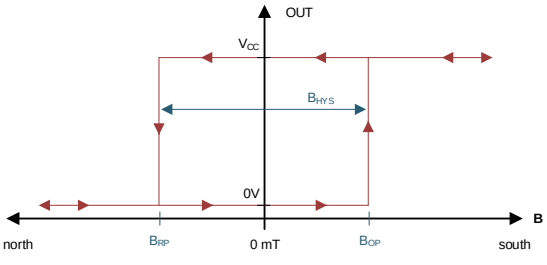

DRV5015A3

An IMPORTANT NOTICE at the end of this data sheet addresses availability, warranty, changes, use in safety-critical applications, intellectual property matters and other important disclaimers. PRODUCTION DATA.

Table of Contents

1 Features ... 1
2 Applications ... 1
3 Description ... 1
4 Revision History ... 2
5 Pin Configuration and Functions ... 3
6 Specifications ... 3
6.1 Absolute Maximum Ratings ... 3
6.2 ESD Ratings ... 3
6.3 Recommended Operating Conditions ... 4
6.4 Thermal Information ... 4
6.5 Electrical Characteristics ... 4
6.6 Magnetic Characteristics ... 4
6.7 Typical Characteristics ... 5
7 Detailed Description ... 7
7.1 Overview ... 7
7.2 Functional Block Diagram ... 7
7.3 Feature Description ... 7
7.4 Device Functional Modes ... 12
8 Application and Implementation ... 13
8.1 Application Information ... 13
8.2 Typical Applications ... 13
8.3 What to Do and What Not to Do ... 16
9 Power Supply Recommendations ... 17
10 Layout ... 17
10.1 Layout Guidelines ... 17
10.2 Layout Example ... 17
11 Device and Documentation Support ... 18
11.1 Documentation Support ... 18
11.2 Receiving Notification of Documentation Updates 18
11.3 Community Resources ... 18
11.4 Trademarks ... 18
11.5 Electrostatic Discharge Caution ... 18
11.6 Glossary ... 18
12 Mechanical, Packaging, and Orderable Information ... 18

4 Revision History

Changes from Original (June 2018) to Revision A **Page**

- Changed output voltage max value from V_{CC} + 0.3 V to 6.0 V in the *Absolute Maximum Ratings* table ... 3

Copyright © 2018–2019, Texas Instruments Incorporated

5 Pin Configuration and Functions

DBZ Package
3-Pin SOT-23
Top View

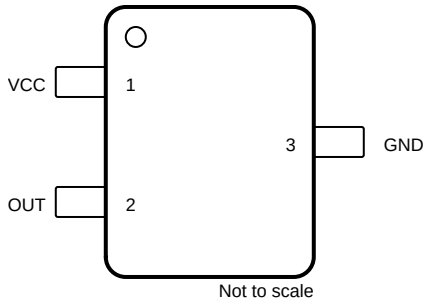

Pin Functions

PIN		TYPE	DESCRIPTION
NAME	NO.		
GND	3	Ground	Ground reference.
OUT	2	Output	Open-drain output.
VCC	1	Power supply	2.5-V to 5.5-V power supply. Connect a ceramic capacitor with a value of at least 0.01 µF between VCC and ground.

6 Specifications

6.1 Absolute Maximum Ratings

over operating free-air temperature range (unless otherwise noted)(1)

		MIN	MAX	UNIT
V_{CC}	Power supply voltage	–0.3	6.0	V
V_{OUT}	Output voltage	–0.3	6.0	V
I_{OUT}	Output current		30	mA
B_{MAX}	Magnetic flux density		Unlimited	T
T_J	Operating junction temperature	–40	150	°C
T_{stg}	Storage temperature	–65	150	°C

(1) Stresses beyond those listed under Absolute Maximum Ratings may cause permanent damage to the device. These are stress ratings only, which do not imply functional operation of the device at these or any other conditions beyond those indicated under Recommended Operating Conditions. Exposure to absolute-maximum-rated conditions for extended periods may affect device reliability.

6.2 ESD Ratings

over operating free-air temperature range (unless otherwise noted)

			VALUE	UNIT
$V_{(ESD)}$	Electrostatic discharge	Human body model (HBM), per ANSI/ESDA/JEDEC JS-001(1)	±5000	V
		Charged device model (CDM), per JEDEC specification JESD22-C101(2)	±1500	V

(1) JEDEC document JEP155 states that 500-V HBM allows safe manufacturing with a standard ESD control process
(2) JEDEC document JEP157 states that 250-V CDM allows safe manufacturing with a standard ESD control process.

Copyright © 2018–2019, Texas Instruments Incorporated

6.3 Recommended Operating Conditions

over operating free-air temperature range (unless otherwise noted)

		MIN	MAX	UNIT
V_{CC}	Power supply voltage	2.5	5.5	V
V_{OUT}	Output pin voltage	0	5.5	V
I_{OUT}	Output sinking current	0	20	mA
T_A	Operating ambient temperature	–40	125	°C

6.4 Thermal Information

THERMAL METRIC(1)		DRV5015 SOT-23 (DBZ) 3 PINS	UNIT
$R_{\theta JA}$	Junction-to-ambient thermal resistance	356	°C/W
$R_{\theta JC(top)}$	Junction-to-case (top) thermal resistance	128	°C/W
$R_{\theta JB}$	Junction-to-board thermal resistance	94	°C/W
Y_{JT}	Junction-to-top characterization parameter	11.4	°C/W
Y_{JB}	Junction-to-board characterization parameter	92	°C/W

(1) For information about traditional and new thermal metrics, see the *Semiconductor and IC Package Thermal Metrics* application report.

6.5 Electrical Characteristics

at V_{CC} = 2.5 V to 5.5 V, over operating free-air temperature range (unless otherwise noted)

PARAMETER		TEST CONDITION	MIN	TYP	MAX	UNIT
I_{CC}	Operating supply current			2.3	2.8	mA
t_{ON}	Power-on time			40	70	µs
t_d	Propagation delay time(1)	B = B_{RP} – 10 mT to B_{OP} + 10 mT in 1 µs		13	25	µs
I_{OZ}	High-impedance output leakage current	5.5 V applied to OUT, while OUT is high-impedance			100	nA
V_{OL}	Low-level output voltage	I_{OUT} = 20 mA		0.15	0.4	V

(1) See the *Propagation Delay* section for more information.

6.6 Magnetic Characteristics

at V_{CC} = 2.5 V to 5.5 V, over operating free-air temperature range (unless otherwise noted)

PARAMETER		TEST CONDITION	MIN	TYP	MAX	UNIT
DRV5015A1, DRV5015A2, DRV5015A3						
f_{BW}	Sensing bandwidth		20	30		kHz
DRV5015A1						
B_{OP}	Magnetic threshold operate point		–0.2	0.7	2.0	mT
B_{RP}	Magnetic threshold release point		–2.0	–0.7	0.2	mT
B_{HYS}	Magnetic hysteresis: $\lvert B_{OP} - B_{RP} \rvert$		0.35	1.4		mT
DRV5015A2DRV5015A3						
B_{OP}	Magnetic threshold operate point		0.5	1.8	3.7	mT
B_{RP}	Magnetic threshold release point		–3.7	–1.8	-0.5	mT
B_{HYS}	Magnetic hysteresis: $\lvert B_{OP} - B_{RP} \rvert$		2.3	3.6		mT

Copyright © 2018–2019, Texas Instruments Incorporated

6.7 Typical Characteristics

at T_A = 25°C typical (unless otherwise noted)

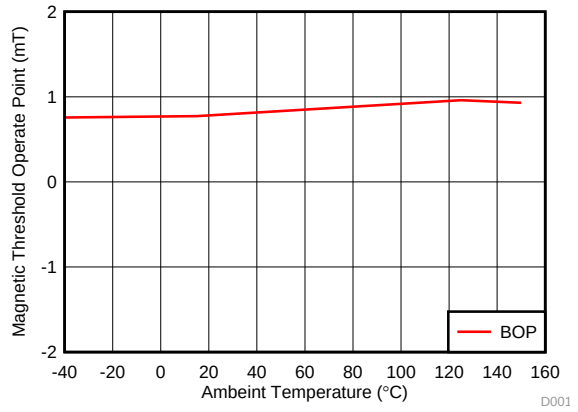

Figure 1. B_{OP} Threshold vs Temperature (DRV5015A1)

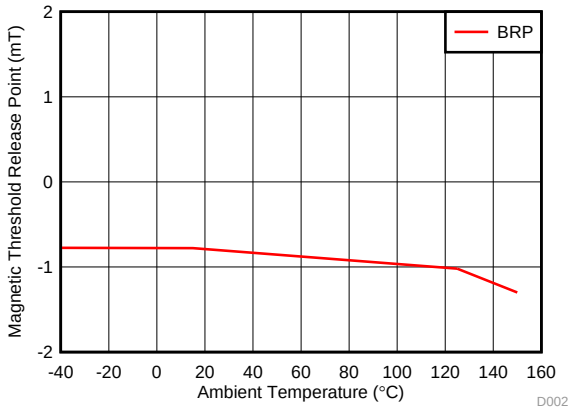

Figure 2. B_{RP} Threshold vs Temperature (DRV5015A1)

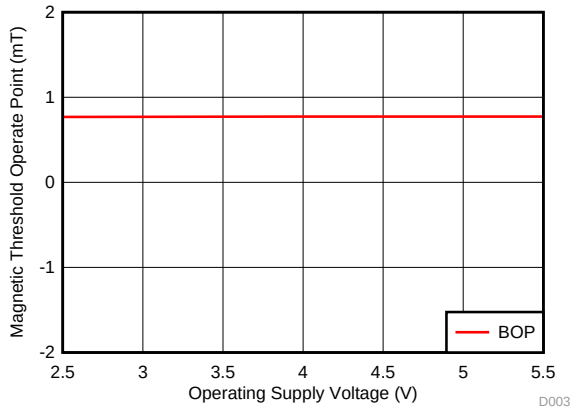

Figure 3. B_{OP} Threshold vs Supply Voltage (DRV5015A1)

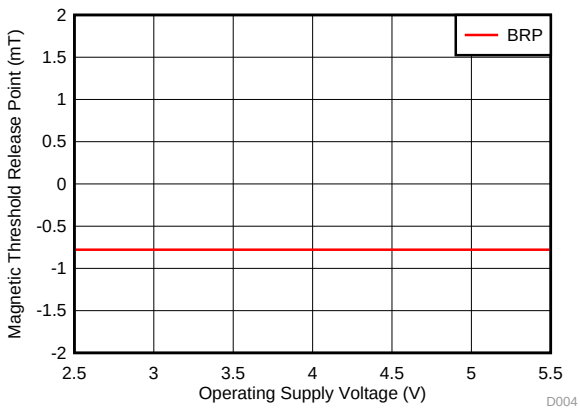

Figure 4. B_{RP} Threshold vs Supply Voltage (DRV5015A1)

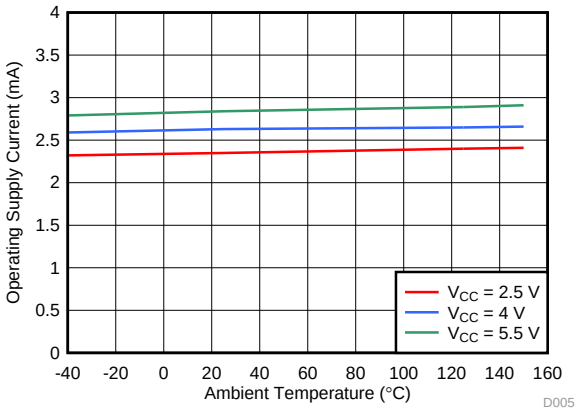

Figure 5. I_{CC} vs Temperature (DRV5015A1)

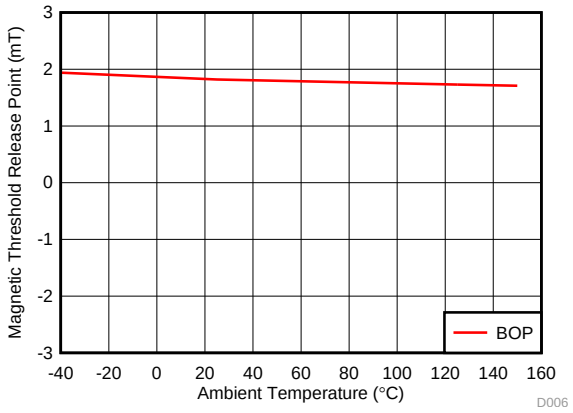

Figure 6. B_{OP} Threshold vs Temperature (DRV5015A2, DRV5015A3)

Copyright © 2018–2019, Texas Instruments Incorporated

Typical Characteristics (continued)

at T_A = 25°C typical (unless otherwise noted)

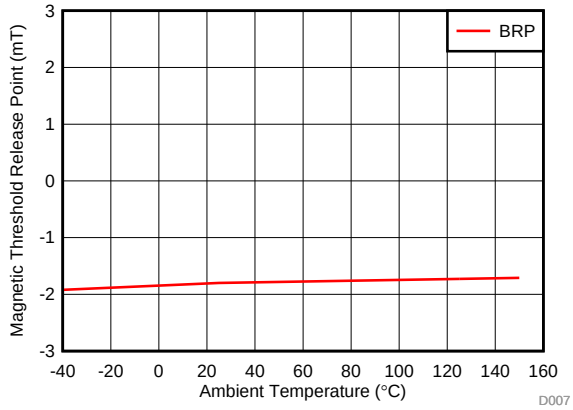

Figure 7. B_{RP} Threshold vs Temperature (DRV5015A2, DRV5015A3)

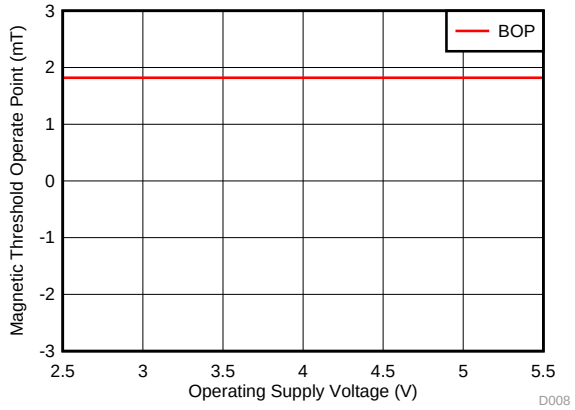

Figure 8. B_{OP} Threshold vs Supply Voltage (DRV5015A2, DRV5015A3)

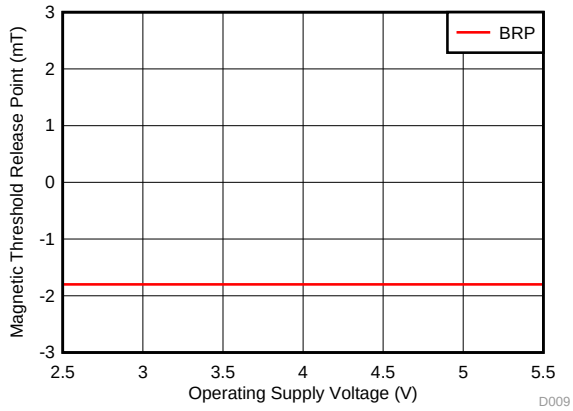

Figure 9. B_{RP} Threshold vs Supply Voltage (DRV5015A2, DRV5015A3)

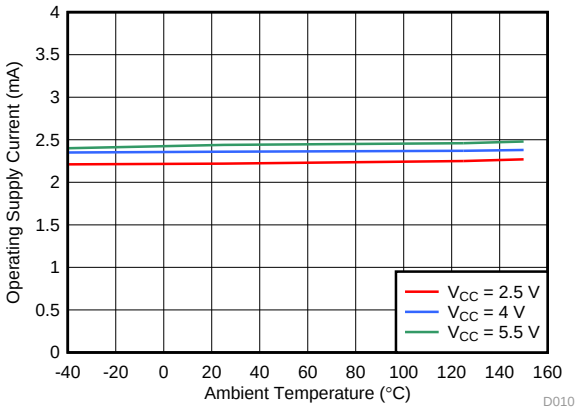

Figure 10. I_{CC} vs Temperature (DRV5015A2, DRV5015A3)

Copyright © 2018–2019, Texas Instruments Incorporated

7 Detailed Description

7.1 Overview

The DRV5015 is a magnetic sensor with a digital output that latches the most recent pole measured. During power-up, in the absence of an external magnetic field, the DRV5015A1 and DRV5015A2 default to a low output state and the DRV5015A3 defaults to a high output state. Applying a south magnetic pole near the top of the package causes the DRV5015A1 and DRV5015A2 output to drive low, whereas a north magnetic pole causes this output to drive high. Applying a south magnetic pole near the top of the package causes the DRV5015A3 output to drive high, whereas a north magnetic pole causes this output to drive low. The absence of a magnetic field causes the output to continue to drive the current state, whether low or high.

The device integrates a Hall effect element, analog signal conditioning, offset cancellation circuits, amplifiers, and comparators. These features provide stable performance across a wide temperature range and resistance to mechanical stress.

7.2 Functional Block Diagram

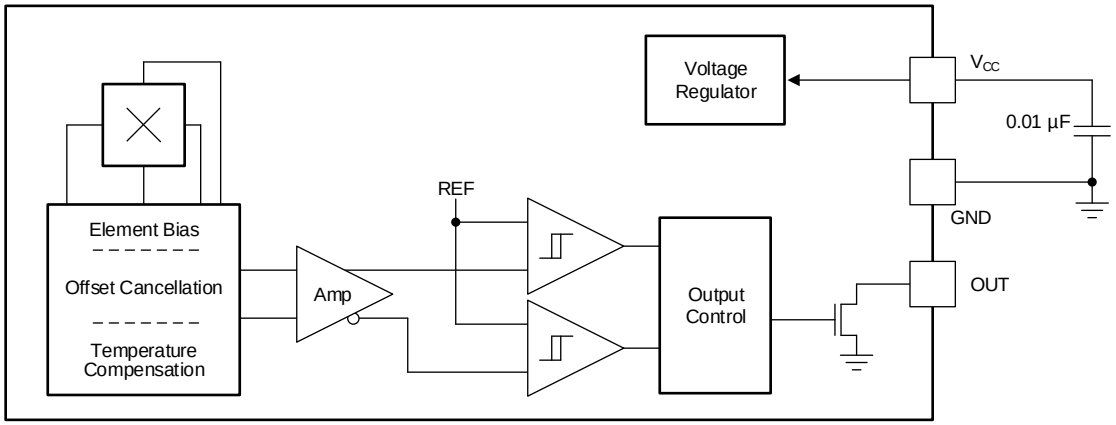

7.3 Feature Description

7.3.1 Magnetic Flux Direction

As shown in Figure 11, the DRV5015 is sensitive to the magnetic field component that is perpendicular to the top of the package.

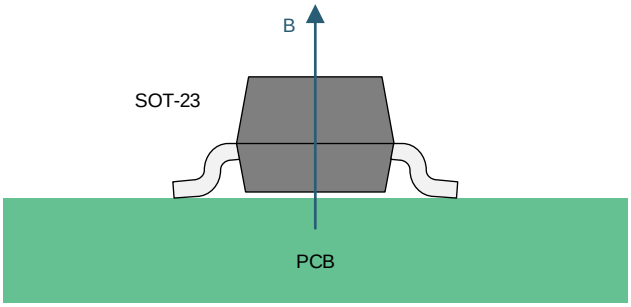

Figure 11. Direction of Sensitivity

Feature Description (continued)

Magnetic flux that travels from the bottom to the top of the package is considered positive in this document. This condition exists when a south magnetic pole is near the top of the package. Magnetic flux that travels from the top to the bottom of the package is considered negative. Figure 12 shows the flux direction polarity.

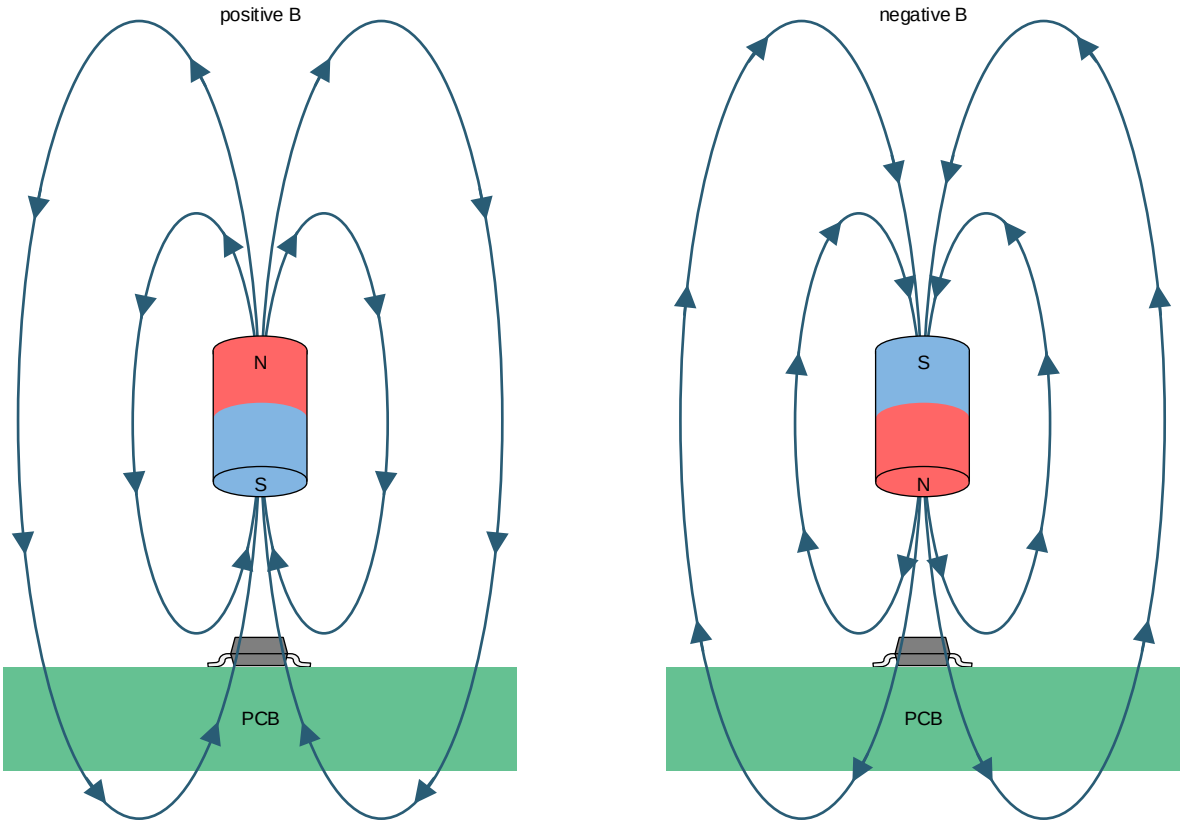

Figure 12. Flux Direction Polarity

Copyright © 2018–2019, Texas Instruments Incorporated

Feature Description (continued)

7.3.2 Magnetic Response

Figure 13 shows the device output response to stimulus and hysteresis.

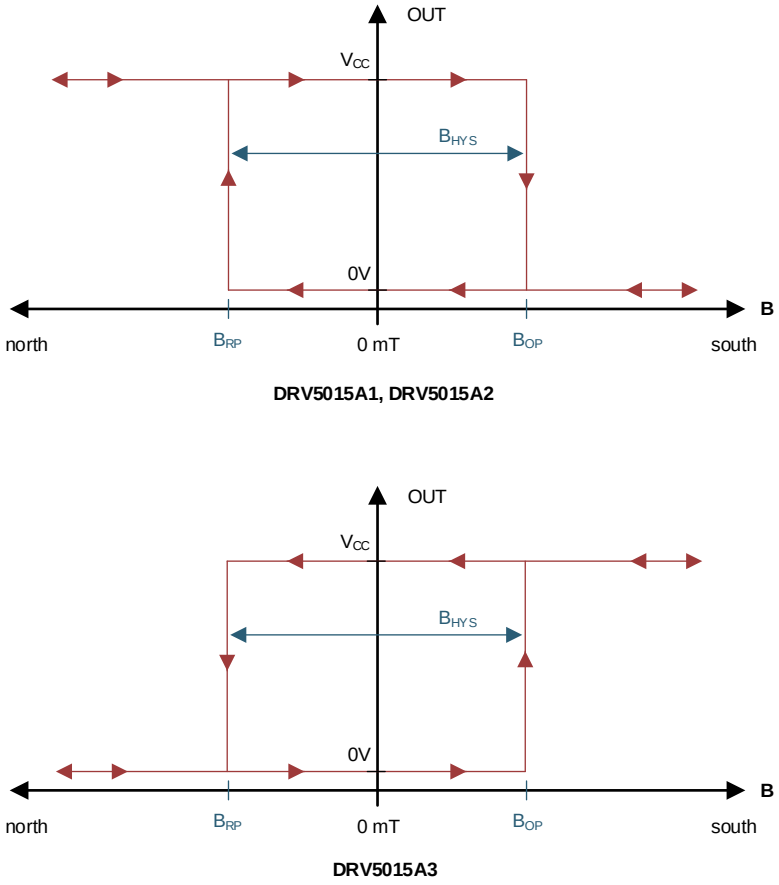

Figure 13. Device Output Response to Stimulus

Feature Description (continued)

7.3.3 Output Driver

Figure 14 shows the DRV5015 open-drain output structure. An open-drain output offers flexibility by enabling system designers to interface to wide-range GPIO termination voltages. C1 represents the input capacitance of the GPIO. R1 represents the pullup resistor connected to the termination voltage, $V_{PULL-UP}$. The maximum allowable value of V_{PULL_UP} is 5.5 V. The value of R1 must be selected after proper considerations among the system speed and the power dissipation through the pullup resistor.

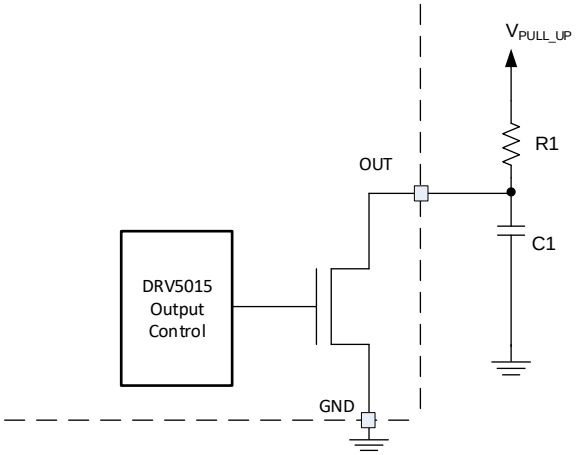

Figure 14. Open-Drain Output (Simplified)

7.3.4 Power-On Time

Figure 15 shows that after the V_{CC} voltage is applied, the DRV5015 measures the magnetic field and sets the output within the t_{ON} time.

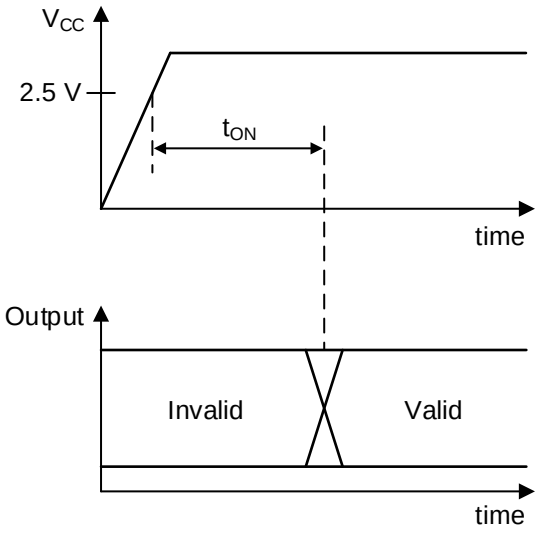

Figure 15. t_{ON} Definition

Copyright © 2018–2019, Texas Instruments Incorporated

Feature Description (continued)

7.3.5 Hall Element Location

The sensing element inside the device is in the center of both packages when viewed from the top. Figure 16 shows the tolerances and side-view dimensions.

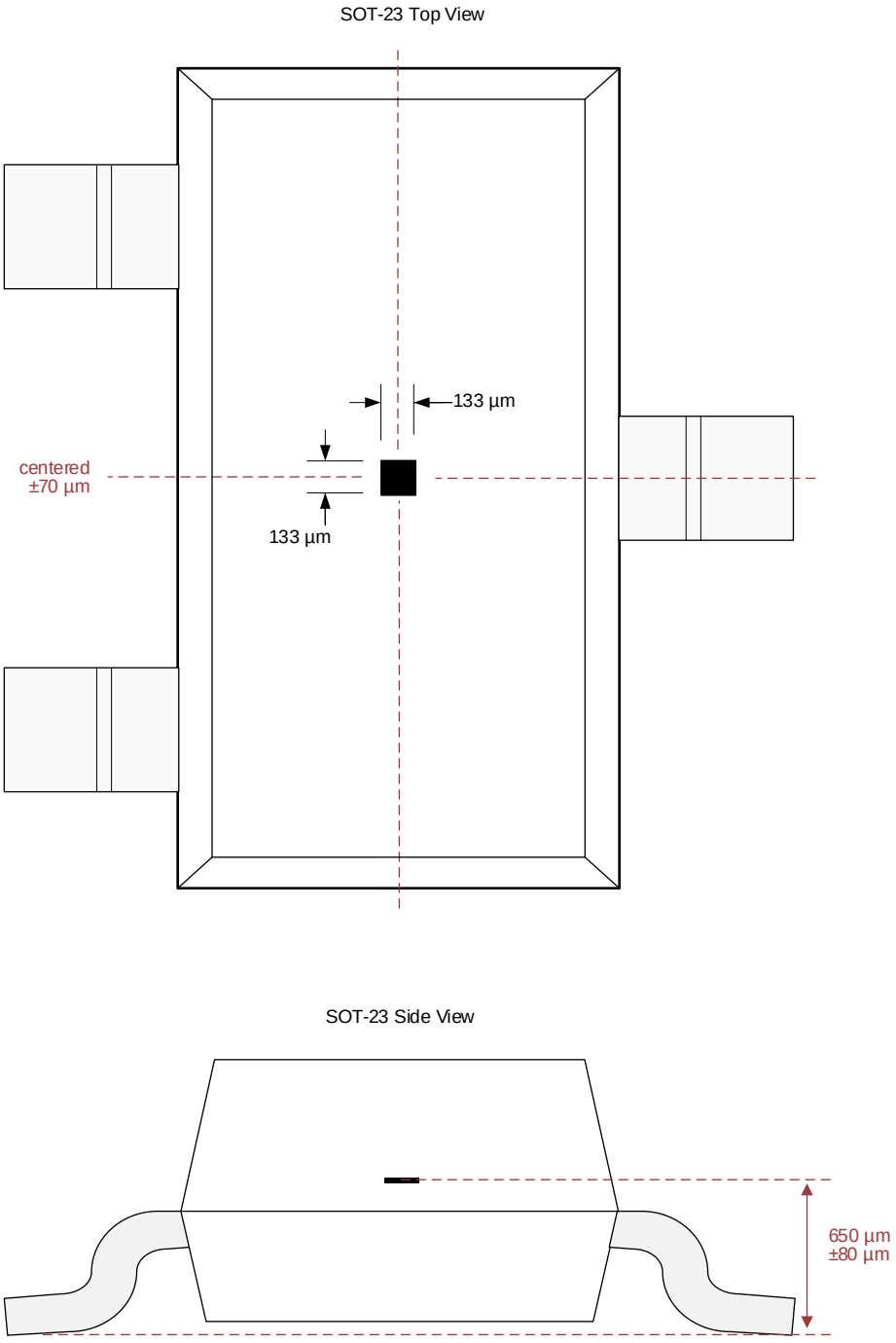

Figure 16. Hall Element Location

Feature Description (continued)

7.3.6 Propagation Delay

The DRV5015 samples the Hall element at a nominal sampling interval of every 16.67 µs to detect the presence of a magnetic north or south pole. At each sampling point, the device takes the average of the current sampled value and immediately preceding sampled value of the magnetic field. If this average value crosses the B_{OP} or B_{RP} threshold, the device output changes to the corresponding state as defined by the *Overview* section.

Figure 17 shows the DRV5015A1 propagation delay analysis in the proximity of a magnetic south pole. The Hall element of the DRV5015 experiences an increasing magnetic field as a magnetic south pole approaches near the device. At time t_2, the average magnetic field is $(B_2 + B_1) / 2$, which is below the B_{OP} threshold of the device. At time t_3, the actual magnetic field has crossed the B_{OP} threshold. However, the average $(B_3 + B_2) / 2$ is still less than the B_{OP} threshold. As such, the device waits for next sample time, t_4, to start the output transition through the analog signal chain. The propagation delay, t_d, is measured as the delay from the time the magnetic field crosses the B_{OP} threshold to the time output transitions.

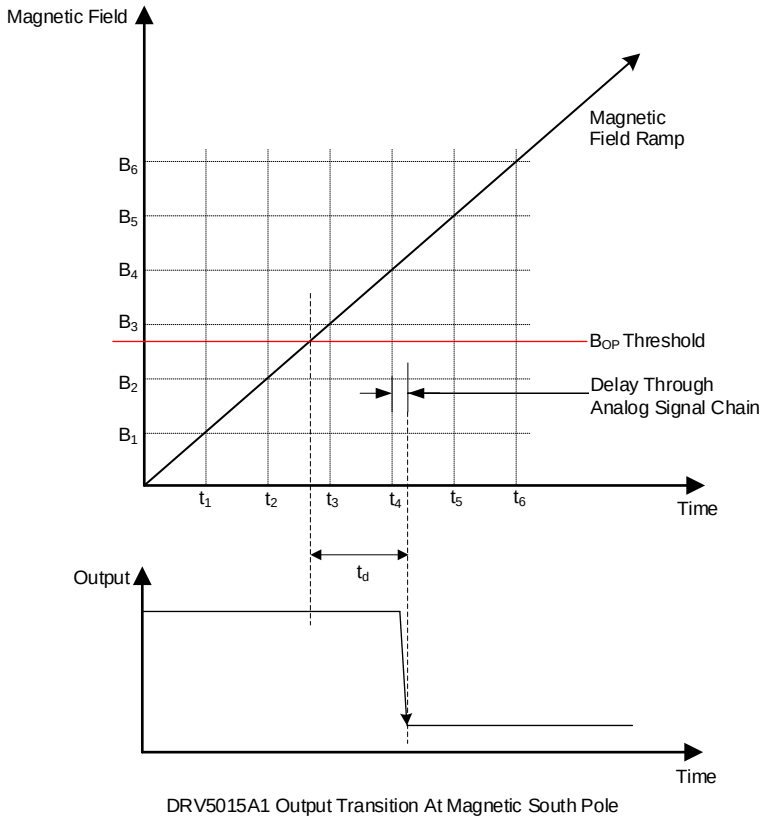

Figure 17. Propagation Delay

7.4 Device Functional Modes

The DRV5015 has one mode of operation that applies when the are met.

Copyright © 2018–2019, Texas Instruments Incorporated

8 Application and Implementation

NOTE

Information in the following applications sections is not part of the TI component specification, and TI does not warrant its accuracy or completeness. TI's customers are responsible for determining suitability of components for their purposes. Customers should validate and test their design implementation to confirm system functionality.

8.1 Application Information

The DRV5015 is ideal for use in rotary applications for brushless DC (BLDC) motor sensors or incremental rotary encoding.

For reliable functionality, the magnet must apply a flux density at the sensor greater than the corresponding maximum B_{OP} or B_{RP} numbers specified in the table. Add additional margin to account for mechanical tolerance, temperature effects, and magnet variation. Magnets generally produce weaker fields as temperature increases.

8.2 Typical Applications

8.2.1 BLDC Motor Sensors Application

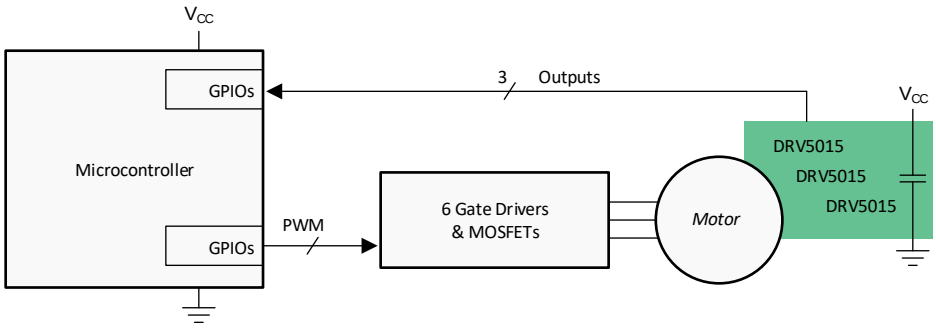

Figure 18. BLDC Motor System

8.2.1.1 Design Requirements

Use the parameters listed in Table 1 for this design.

Table 1. Design Parameters

DESIGN PARAMETER	EXAMPLE VALUE
Number of motor phases	3
Motor RPM	15 kRPM
Number of magnet poles on the rotor	12
Magnetic material	Bonded neodymium
Maximum temperature inside the motor	125°C
Magnetic flux density peaks at the Hall sensors at maximum temperature	±11 mT
Hall sensor V_{CC}	5 V ± 10%

8.2.1.2 Detailed Design Procedure

Three-phase brushless DC motors often use three Hall effect latch devices to measure the electrical angle of the rotor and tell the controller how to drive the three wires. These wires connect to electromagnet windings, which generate magnetic fields that apply forces to the permanent magnets on the rotor.

Space the three Hall sensors across the printed-circuit board (PCB) so that these sensors are 120 electrical degrees apart. This configuration creates six 3-bit states with equal time duration for each electrical cycle, which consists of one north and one south magnetic pole. From the center of the motor axis, the number of degrees to space each sensor equals *2 / [number of poles] × 120°*. In this design example, the first sensor is placed at 0°, the second sensor is placed 20° rotated, and the third sensor is placed 40° rotated. Alternatively, a 3× degree offset can be added or subtracted to any sensor, meaning that the third sensor can alternatively be placed at 40° – (3 × 20°) = –20°.

8.2.1.3 Application Curve

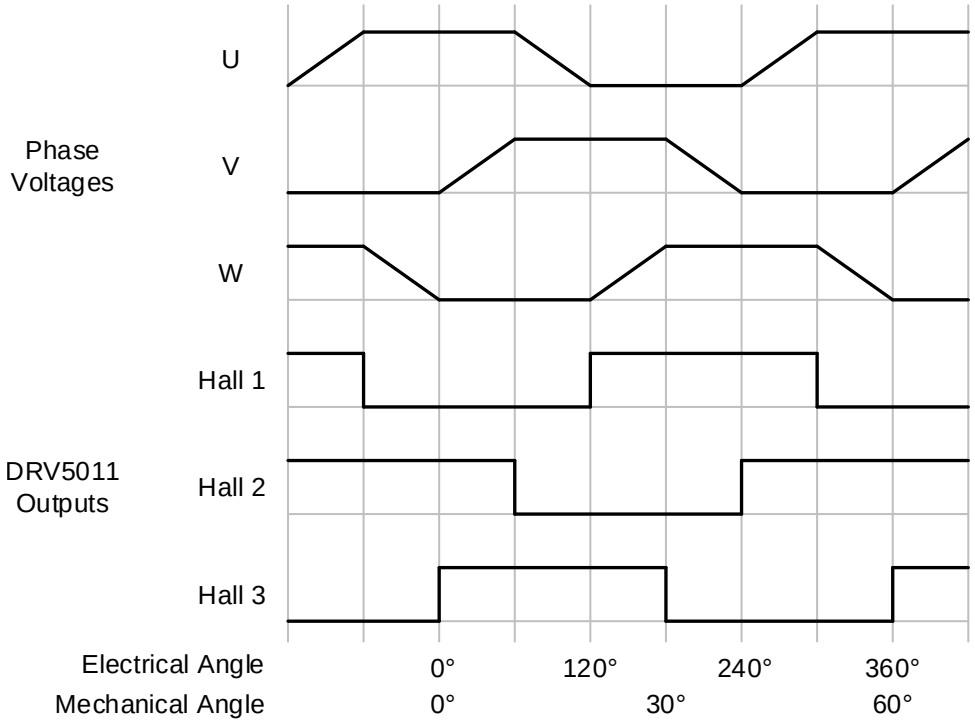

Figure 19. Phase Voltages and Hall Signals for a 3-Phase BLDC Motor

Copyright © 2018–2019, Texas Instruments Incorporated

8.2.2 Incremental Rotary Encoding Application

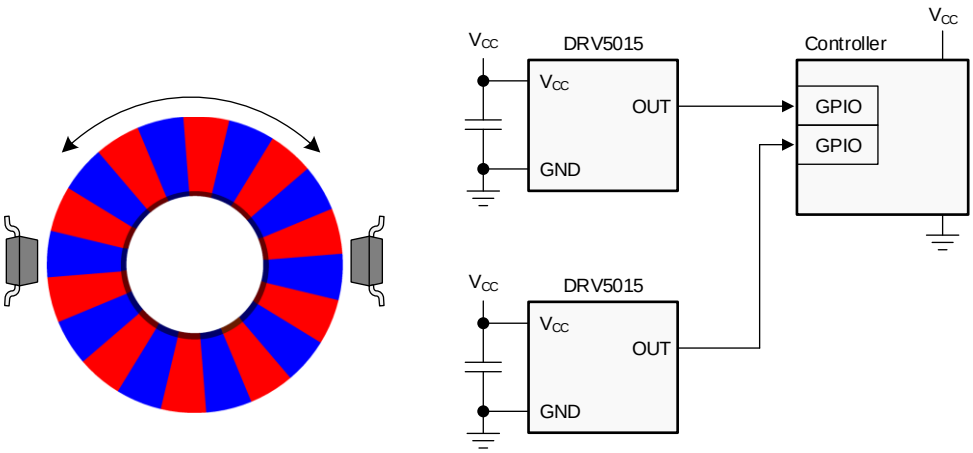

Figure 20. Incremental Rotary Encoding System

8.2.2.1 Design Requirements

Use the parameters listed in Table 2 for this design.

Table 2. Design Parameters

DESIGN PARAMETER	EXAMPLE VALUE
RPM range	45 kRPM
Number of magnet poles	8
Magnetic material	Ferrite
Air gap above the Hall sensors	2.5 mm
Magnetic flux density peaks at the Hall sensors at maximum temperature	±7 mT

8.2.2.2 Detailed Design Procedure

Incremental encoders are used on knobs, wheels, motors, and flow meters to measure relative rotary movement. By attaching a ring magnet to the rotating component and placing a DRV5015 nearby, the sensor generates voltage pulses as the magnet turns. If directional information is also needed (clockwise versus counterclockwise), a second DRV5015 can be added with a phase offset, and then the order of transitions between the two signals describes the direction.

Creating this phase offset requires spacing the two sensors apart on the PCB, and an ideal 90° quadrature offset is attained when the sensors are separated by half the length of each magnet pole, plus any integer number of pole lengths. Figure 20 shows this configuration because the sensors are 1.5 pole lengths apart. One of the sensors changes its output every *360° / 8 poles / 2 sensors* = 22.5° of rotation. For reference, the *TIDA-00480 TI Design Considerations Automotive Hall Sensor Rotary Encoder* uses a 66-pole magnet with changes every 2.7°.

The maximum rotational speed that can be measured is limited by the sensor bandwidth. Generally, the bandwidth must be faster than two times the number of poles per second. In this design example, the maximum speed is 45000 RPM, which involves 6000 poles per second. The DRV5015 sensing bandwidth is typically 30 kHz, which is five times the pole frequency. In systems where the sensor sampling rate is close to two times the number of poles per second, most of the samples measure a magnetic field that is significantly lower than the peak value, because the peaks only occur when the sensor and pole are perfectly aligned. In this case, add margin by applying a stronger magnetic field that has peaks significantly higher than the maximum B_{OP}.

Copyright © 2018–2019, Texas Instruments Incorporated

8.2.2.3 Application Curve

Two signals in quadrature provide movement and direction information. Figure 21 shows how each 2-bit state has unique adjacent 2-bit states for clockwise and counterclockwise.

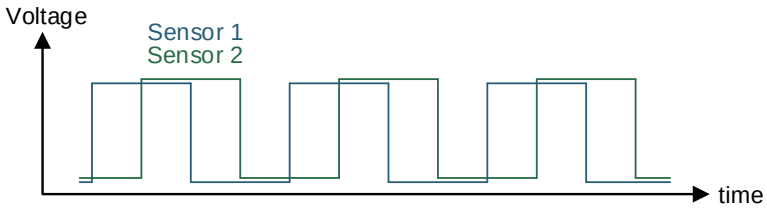

Figure 21. Quadrature Output (2-Bit)

8.3 What to Do and What Not to Do

The Hall element is sensitive to magnetic fields that are perpendicular to the top of the package; therefore, the correct magnet orientation must be used for the sensor to detect the field. Figure 22 shows correct and incorrect orientations when using a ring magnet.

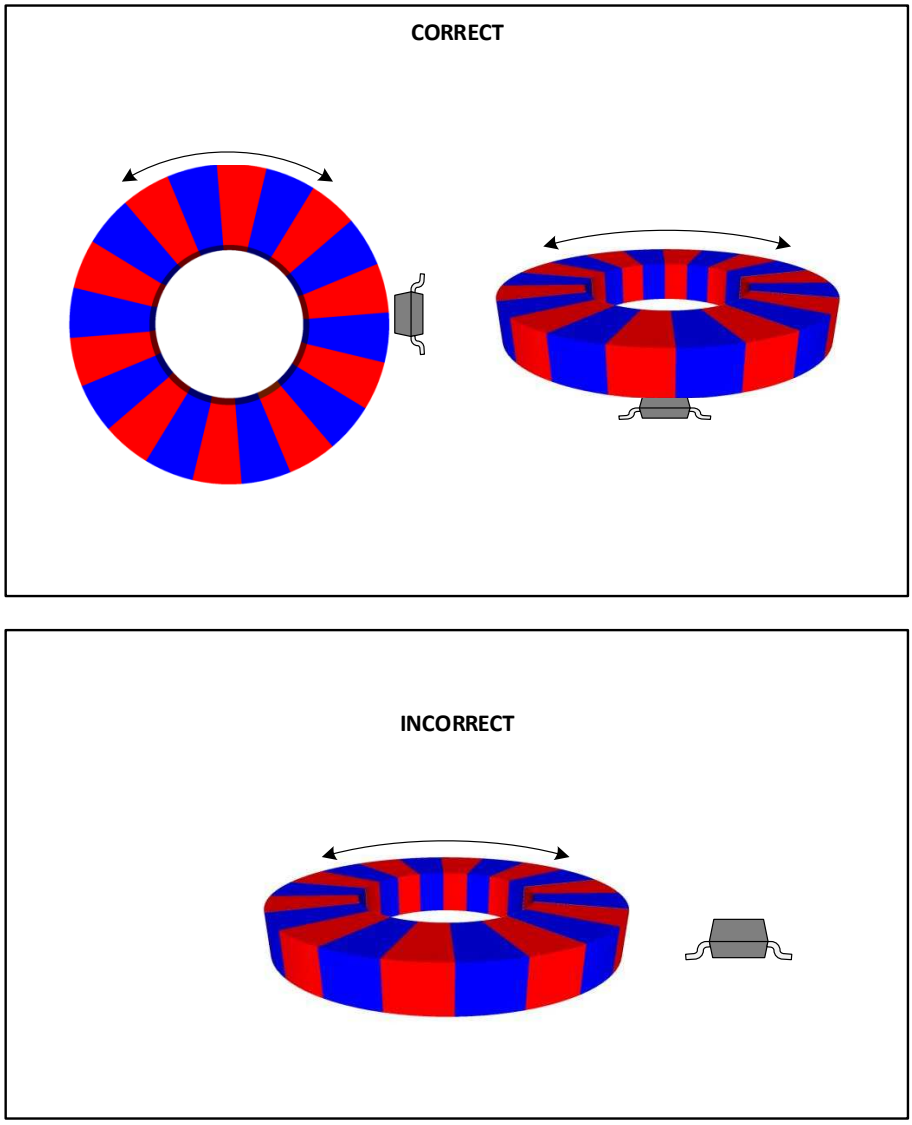

Figure 22. Correct and Incorrect Magnet Orientations

Copyright © 2018–2019, Texas Instruments Incorporated

9 Power Supply Recommendations

The DRV5015 is powered from 2.5-V to 5.5-V DC power supplies. A decoupling capacitor close to the device must be used to provide local energy with minimal inductance. TI recommends using a ceramic capacitor with a value of at least 0.01 µF.

10 Layout

10.1 Layout Guidelines

Magnetic fields pass through most nonferromagnetic materials with no significant disturbance. Embedding Hall effect sensors within plastic or aluminum enclosures and sensing magnets on the outside is common practice. Magnetic fields also easily pass through most PCBs, which makes placing the magnet on the opposite side of the PCB possible.

10.2 Layout Example

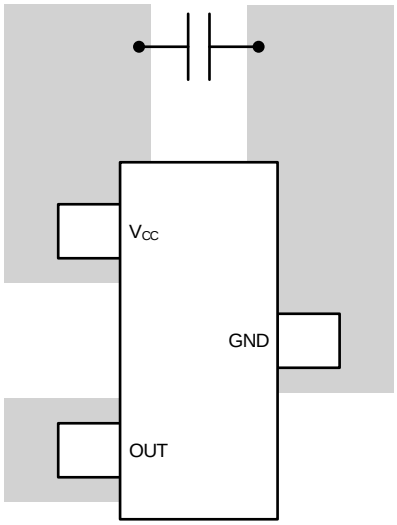

Figure 23. Example Layout

Copyright © 2018–2019, Texas Instruments Incorporated

11 Device and Documentation Support

11.1 Documentation Support

11.1.1 Related Documentation

For related documentation see the following:

- *TIDA-00480 TI Design Considerations Automotive Hall Sensor Rotary Encoder*
- *HALL-ADAPTER-EVM* user's guide

11.2 Receiving Notification of Documentation Updates

To receive notification of documentation updates, navigate to the device product folder on ti.com. In the upper right corner, click on *Alert me* to register and receive a weekly digest of any product information that has changed. For change details, review the revision history included in any revised document.

11.3 Community Resources

The following links connect to TI community resources. Linked contents are provided "AS IS" by the respective contributors. They do not constitute TI specifications and do not necessarily reflect TI's views; see TI's Terms of Use.

TI E2E™ Online Community ***TI's Engineer-to-Engineer (E2E) Community.*** Created to foster collaboration among engineers. At e2e.ti.com, you can ask questions, share knowledge, explore ideas and help solve problems with fellow engineers.

Design Support ***TI's Design Support*** Quickly find helpful E2E forums along with design support tools and contact information for technical support.

11.4 Trademarks

E2E is a trademark of Texas Instruments.
All other trademarks are the property of their respective owners.

11.5 Electrostatic Discharge Caution



This integrated circuit can be damaged by ESD. Texas Instruments recommends that all integrated circuits be handled with appropriate precautions. Failure to observe proper handling and installation procedures can cause damage.

ESD damage can range from subtle performance degradation to complete device failure. Precision integrated circuits may be more susceptible to damage because very small parametric changes could cause the device not to meet its published specifications.

11.6 Glossary

SLYZ022 — *TI Glossary*.

This glossary lists and explains terms, acronyms, and definitions.

12 Mechanical, Packaging, and Orderable Information

The following pages include mechanical, packaging, and orderable information. This information is the most current data available for the designated devices. This data is subject to change without notice and revision of this document. For browser-based versions of this data sheet, refer to the left-hand navigation.

Copyright © 2018–2019, Texas Instruments Incorporated

PACKAGING INFORMATION

Orderable Device	Status (1)	Package Type	Package Drawing	Pins	Package Qty	Eco Plan (2)	Lead/Ball Finish (6)	MSL Peak Temp (3)	Op Temp (°C)	Device Marking (4/5)	Samples
DRV5015A1QDBZR	ACTIVE	SOT-23	DBZ	3	3000	Green (RoHS & no Sb/Br)	SN	Level-1-260C-UNLIM	-40 to 125	15A1	Samples
DRV5015A1QDBZT	ACTIVE	SOT-23	DBZ	3	250	Green (RoHS & no Sb/Br)	SN	Level-1-260C-UNLIM	-40 to 125	15A1	Samples
DRV5015A2QDBZR	ACTIVE	SOT-23	DBZ	3	3000	Green (RoHS & no Sb/Br)	SN	Level-1-260C-UNLIM	-40 to 125	15A2	Samples
DRV5015A2QDBZT	ACTIVE	SOT-23	DBZ	3	250	Green (RoHS & no Sb/Br)	SN	Level-1-260C-UNLIM	-40 to 125	15A2	Samples
DRV5015A3QDBZR	ACTIVE	SOT-23	DBZ	3	3000	Green (RoHS & no Sb/Br)	SN	Level-1-260C-UNLIM	-40 to 125	15A3	Samples
DRV5015A3QDBZT	ACTIVE	SOT-23	DBZ	3	250	Green (RoHS & no Sb/Br)	SN	Level-1-260C-UNLIM	-40 to 125	15A3	Samples

(1) The marketing status values are defined as follows:
ACTIVE: Product device recommended for new designs.
LIFEBUY: TI has announced that the device will be discontinued, and a lifetime-buy period is in effect.
NRND: Not recommended for new designs. Device is in production to support existing customers, but TI does not recommend using this part in a new design.
PREVIEW: Device has been announced but is not in production. Samples may or may not be available.
OBSOLETE: TI has discontinued the production of the device.

(2) **RoHS:** TI defines "RoHS" to mean semiconductor products that are compliant with the current EU RoHS requirements for all 10 RoHS substances, including the requirement that RoHS substance do not exceed 0.1% by weight in homogeneous materials. Where designed to be soldered at high temperatures, "RoHS" products are suitable for use in specified lead-free processes. TI may reference these types of products as "Pb-Free".
RoHS Exempt: TI defines "RoHS Exempt" to mean products that contain lead but are compliant with EU RoHS pursuant to a specific EU RoHS exemption.
Green: TI defines "Green" to mean the content of Chlorine (Cl) and Bromine (Br) based flame retardants meet JS709B low halogen requirements of <=1000ppm threshold. Antimony trioxide based flame retardants must also meet the <=1000ppm threshold requirement.

(3) MSL, Peak Temp. - The Moisture Sensitivity Level rating according to the JEDEC industry standard classifications, and peak solder temperature.

(4) There may be additional marking, which relates to the logo, the lot trace code information, or the environmental category on the device.

(5) Multiple Device Markings will be inside parentheses. Only one Device Marking contained in parentheses and separated by a "~" will appear on a device. If a line is indented then it is a continuation of the previous line and the two combined represent the entire Device Marking for that device.

(6) Lead/Ball Finish - Orderable Devices may have multiple material finish options. Finish options are separated by a vertical ruled line. Lead/Ball Finish values may wrap to two lines if the finish value exceeds the maximum column width.

Important Information and Disclaimer: The information provided on this page represents TI's knowledge and belief as of the date that it is provided. TI bases its knowledge and belief on information provided by third parties, and makes no representation or warranty as to the accuracy of such information. Efforts are underway to better integrate information from third parties. TI has taken and continues to take reasonable steps to provide representative and accurate information but may not have conducted destructive testing or chemical analysis on incoming materials and chemicals. TI and TI suppliers consider certain information to be proprietary, and thus CAS numbers and other limited information may not be available for release.

In no event shall TI's liability arising out of such information exceed the total purchase price of the TI part(s) at issue in this document sold by TI to Customer on an annual basis.

OTHER QUALIFIED VERSIONS OF DRV5015 :

- Automotive: DRV5015-Q1

NOTE: Qualified Version Definitions:

- Automotive - Q100 devices qualified for high-reliability automotive applications targeting zero defects

TAPE AND REEL INFORMATION

REEL DIMENSIONS

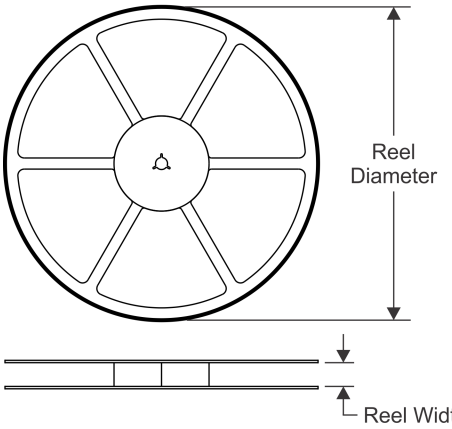

TAPE DIMENSIONS

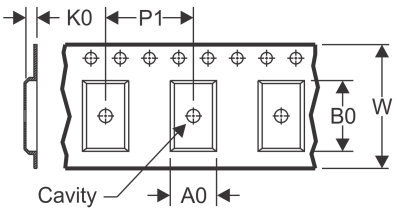

A0	Dimension designed to accommodate the component width
B0	Dimension designed to accommodate the component length
K0	Dimension designed to accommodate the component thickness
W	Overall width of the carrier tape
P1	Pitch between successive cavity centers

QUADRANT ASSIGNMENTS FOR PIN 1 ORIENTATION IN TAPE

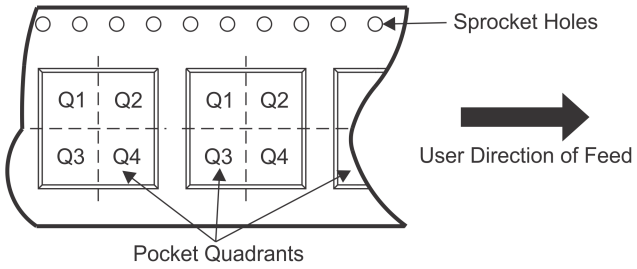

*All dimensions are nominal

Device	Package Type	Package Drawing	Pins	SPQ	Reel Diameter (mm)	Reel Width W1 (mm)	A0 (mm)	B0 (mm)	K0 (mm)	P1 (mm)	W (mm)	Pin1 Quadrant
DRV5015A1QDBZR	SOT-23	DBZ	3	3000	178.0	9.0	3.15	2.77	1.22	4.0	8.0	Q3
DRV5015A1QDBZT	SOT-23	DBZ	3	250	178.0	9.0	3.15	2.77	1.22	4.0	8.0	Q3
DRV5015A2QDBZR	SOT-23	DBZ	3	3000	178.0	9.0	3.15	2.77	1.22	4.0	8.0	Q3
DRV5015A2QDBZT	SOT-23	DBZ	3	250	178.0	9.0	3.15	2.77	1.22	4.0	8.0	Q3
DRV5015A3QDBZR	SOT-23	DBZ	3	3000	178.0	9.0	3.15	2.77	1.22	4.0	8.0	Q3
DRV5015A3QDBZT	SOT-23	DBZ	3	250	178.0	9.0	3.15	2.77	1.22	4.0	8.0	Q3

TAPE AND REEL BOX DIMENSIONS

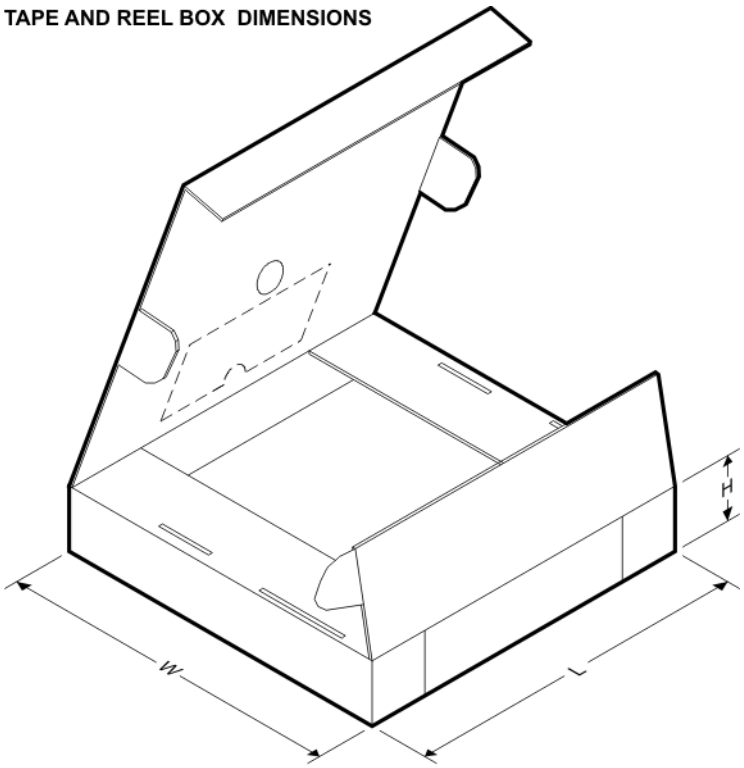

*All dimensions are nominal

Device	Package Type	Package Drawing	Pins	SPQ	Length (mm)	Width (mm)	Height (mm)
DRV5015A1QDBZR	SOT-23	DBZ	3	3000	180.0	180.0	18.0
DRV5015A1QDBZT	SOT-23	DBZ	3	250	180.0	180.0	18.0
DRV5015A2QDBZR	SOT-23	DBZ	3	3000	180.0	180.0	18.0
DRV5015A2QDBZT	SOT-23	DBZ	3	250	180.0	180.0	18.0
DRV5015A3QDBZR	SOT-23	DBZ	3	3000	180.0	180.0	18.0
DRV5015A3QDBZT	SOT-23	DBZ	3	250	180.0	180.0	18.0

GENERIC PACKAGE VIEW

DBZ 3 SOT-23 - 1.12 mm max height

SMALL OUTLINE TRANSISTOR

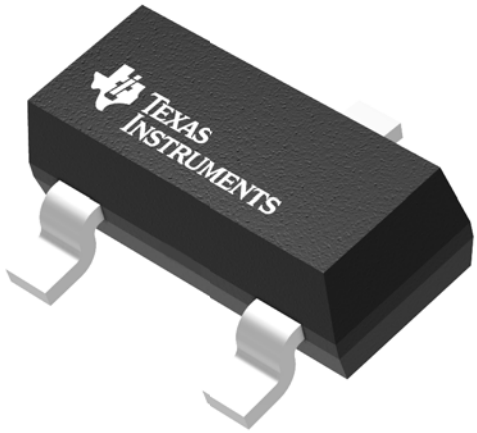

Images above are just a representation of the package family, actual package may vary.
Refer to the product data sheet for package details.

PACKAGE OUTLINE

DBZ0003A

SOT-23 - 1.12 mm max height

SMALL OUTLINE TRANSISTOR

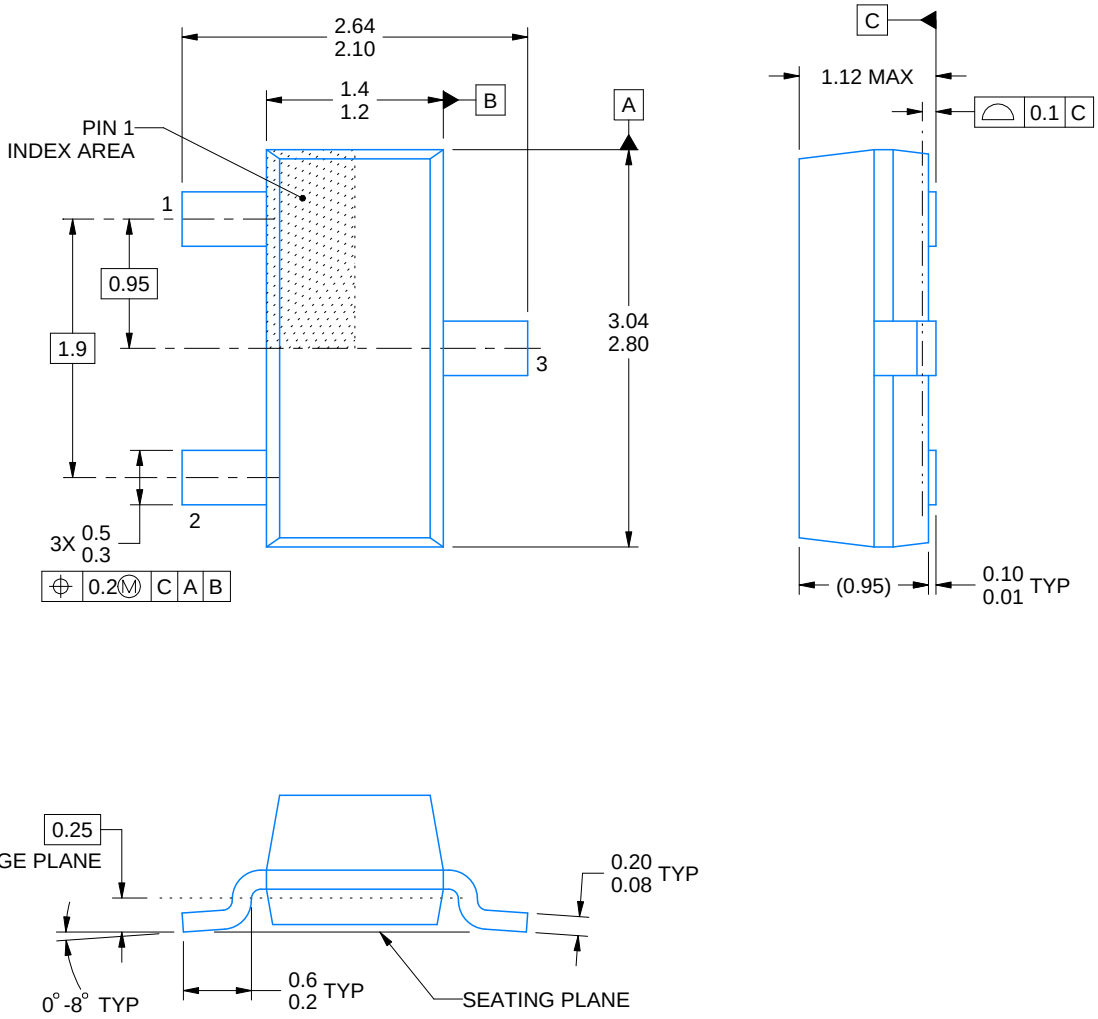

4214838/C 04/2017

NOTES:

1. All linear dimensions are in millimeters. Any dimensions in parenthesis are for reference only. Dimensioning and tolerancing per ASME Y14.5M.
2. This drawing is subject to change without notice.
3. Reference JEDEC registration TO-236, except minimum foot length.

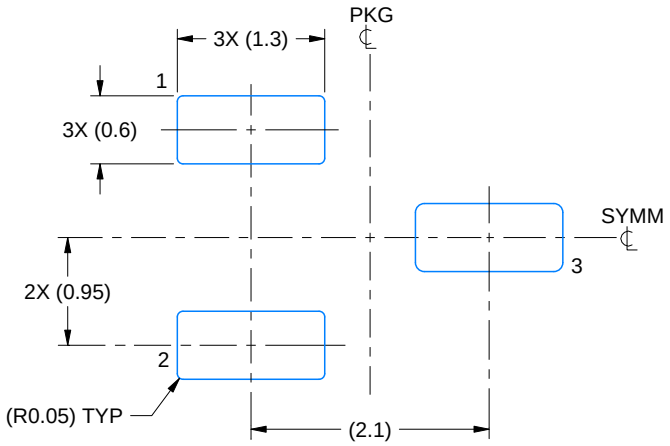

LAND PATTERN EXAMPLE
SCALE:15X

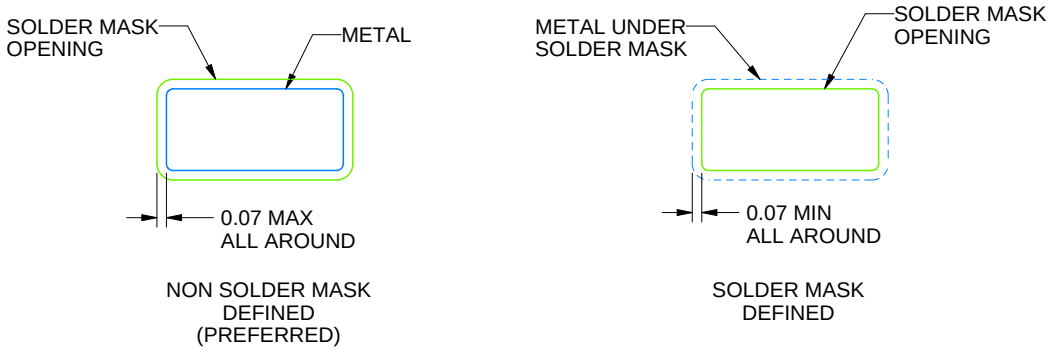

SOLDER MASK DETAILS

4214838/C 04/2017

NOTES: (continued)

4. Publication IPC-7351 may have alternate designs.
5. Solder mask tolerances between and around signal pads can vary based on board fabrication site.

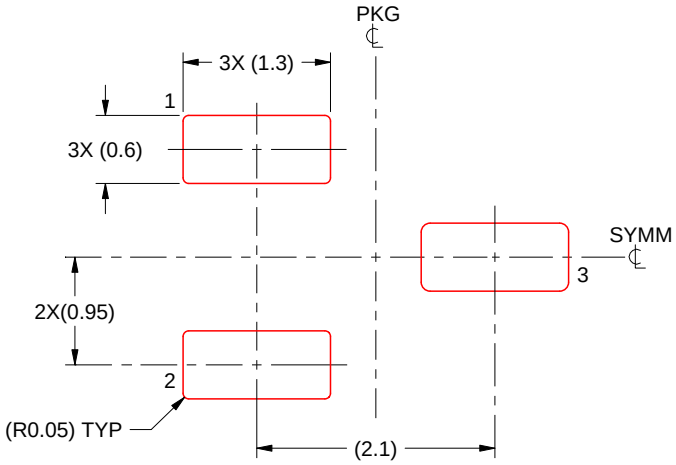

SOLDER PASTE EXAMPLE
BASED ON 0.125 THICK STENCIL
SCALE:15X

4214838/C 04/2017

NOTES: (continued)

6. Laser cutting apertures with trapezoidal walls and rounded corners may offer better paste release. IPC-7525 may have alternate design recommendations.
7. Board assembly site may have different recommendations for stencil design.

IMPORTANT NOTICE AND DISCLAIMER

TI PROVIDES TECHNICAL AND RELIABILITY DATA (INCLUDING DATASHEETS), DESIGN RESOURCES (INCLUDING REFERENCE DESIGNS), APPLICATION OR OTHER DESIGN ADVICE, WEB TOOLS, SAFETY INFORMATION, AND OTHER RESOURCES “AS IS” AND WITH ALL FAULTS, AND DISCLAIMS ALL WARRANTIES, EXPRESS AND IMPLIED, INCLUDING WITHOUT LIMITATION ANY IMPLIED WARRANTIES OF MERCHANTABILITY, FITNESS FOR A PARTICULAR PURPOSE OR NON-INFRINGEMENT OF THIRD PARTY INTELLECTUAL PROPERTY RIGHTS.

These resources are intended for skilled developers designing with TI products. You are solely responsible for (1) selecting the appropriate TI products for your application, (2) designing, validating and testing your application, and (3) ensuring your application meets applicable standards, and any other safety, security, or other requirements. These resources are subject to change without notice. TI grants you permission to use these resources only for development of an application that uses the TI products described in the resource. Other reproduction and display of these resources is prohibited. No license is granted to any other TI intellectual property right or to any third party intellectual property right. TI disclaims responsibility for, and you will fully indemnify TI and its representatives against, any claims, damages, costs, losses, and liabilities arising out of your use of these resources.

TI’s products are provided subject to TI’s Terms of Sale (www.ti.com/legal/termsofsale.html) or other applicable terms available either on ti.com or provided in conjunction with such TI products. TI’s provision of these resources does not expand or otherwise alter TI’s applicable warranties or warranty disclaimers for TI products.

Mailing Address: Texas Instruments, Post Office Box 655303, Dallas, Texas 75265
Copyright © 2020, Texas Instruments Incorporated