DRV10964 5-V, Three-Phase Sinusoidal Sensorless BLDC Motor Driver

1 Features

- Proprietary Sensorless Windowless 180° Sinusoidal Control Scheme
- Input Voltage Range 2.1 to 5.5 V
- 500-mA Output Current
- Low Quiescent Current 15 µA (Typical) at Sleep Mode
- Total Driver H+L Rdson Less than 1.5 Ω
- Current Limit and Short-Circuit Current Protection
- Lock Detection
- Anti Voltage Surge (AVS)
- UVLO
- Thermal Shutdown

2 Applications

- Notebook CPU Fans
- Game Station CPU Fans
- ASIC Cooling Fans

3 Description

The DRV10964 is a three-phase sensorless motor driver with integrated power MOSFETs. It is specifically designed for high-efficiency, low-noise and low-external component count motor drive applications. The proprietary sensorless windowless 180° sinusoidal control scheme offers ultra-quiet motor drive performance. The DRV10964 contains an intelligent lock detect function, combined with other internal protection circuits to ensure safe operation. The DRV10964 is available in a thermally efficient 10-pin USON package with an exposed thermal pad.

Device Information (1)

PART NUMBER	PACKAGE	BODY SIZE (NOM)
DRV10964	USON (10)	3.00 mm × 3.00 mm

(1) For all available packages, see the orderable addendum at the end of the data sheet.

Simplified Schematic

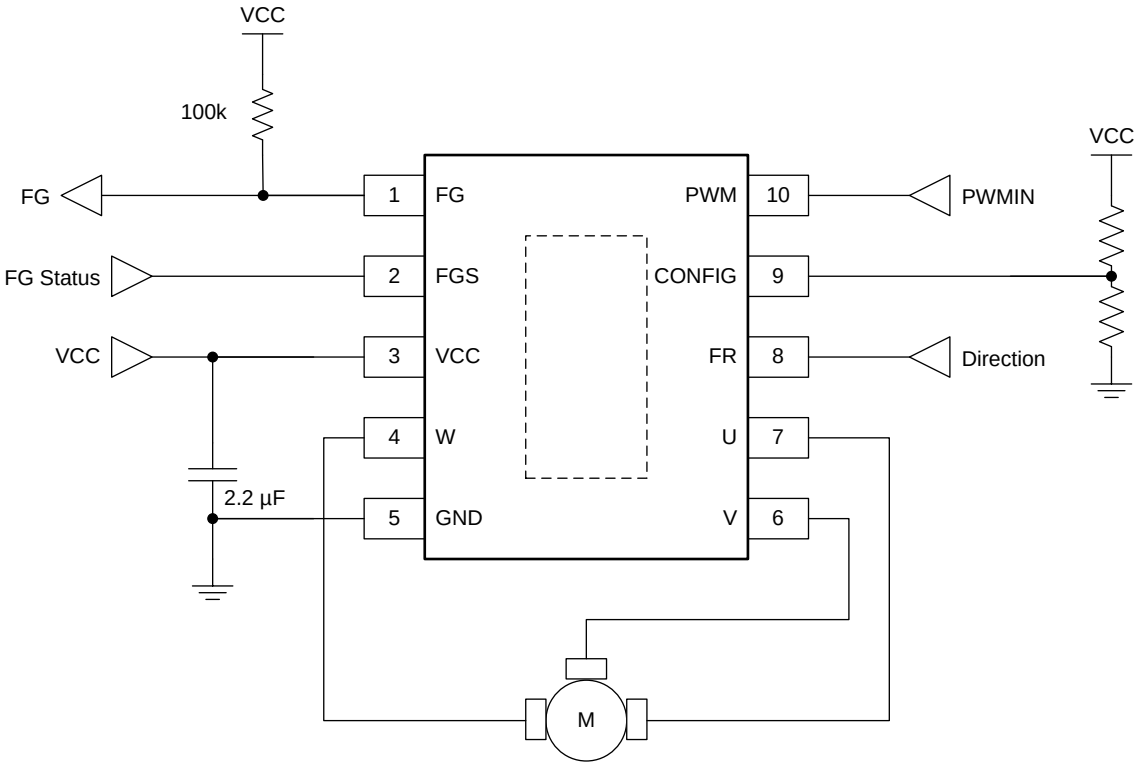

An IMPORTANT NOTICE at the end of this data sheet addresses availability, warranty, changes, use in safety-critical applications, intellectual property matters and other important disclaimers. PRODUCTION DATA.

Table of Contents

1 Features ... 1
2 Applications ... 1
3 Description ... 1
4 Revision History ... 2
5 Pin Configuration and Functions ... 3
6 Specifications ... 4
6.1 Absolute Maximum Ratings ... 4
6.2 ESD Ratings ... 4
6.3 Recommended Operating Conditions ... 4
6.4 Thermal Information ... 4
6.5 Electrical Characteristics ... 5
6.6 Typical Characteristics ... 6
7 Detailed Description ... 7
7.1 Overview ... 7
7.2 Functional Block Diagram ... 7
7.3 Feature Description ... 7
7.4 Device Functional Modes ... 14
8 Application and Implementation ... 17
8.1 Application Information ... 17
8.2 Typical Application ... 17
9 Power Supply Recommendations ... 20
10 Layout ... 20
10.1 Layout Guidelines ... 20
10.2 Layout Example ... 20
11 Device and Documentation Support ... 21
11.1 Community Resources ... 21
11.2 Trademarks ... 21
11.3 Electrostatic Discharge Caution ... 21
11.4 Glossary ... 21
12 Mechanical, Packaging, and Orderable Information ... 21

4 Revision History

DATE	REVISION	NOTES
February 2016	*	Initial release.

Copyright © 2016, Texas Instruments Incorporated

5 Pin Configuration and Functions

DSN Package
10-Pin USON
Top View

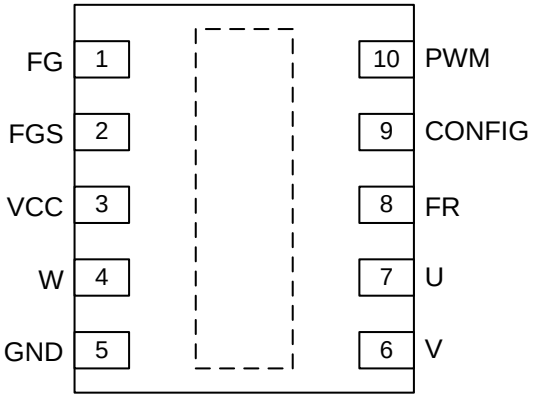

Pin Functions

PIN		I/O	DESCRIPTION
NO.	NAME		
1	FG	Output	Motor speed indicator output (open drain).
2	FGS	Input	Motor speed indicator selector. The state of this pin is latched on power up and can not be changed dynamically.
3	VCC	Power	Input voltage for motor and chip supply.
4	W	IO	Motor Phase W
5	GND	Ground	Ground
6	V	IO	Motor Phase V
7	U	IO	Motor Phase U
8	FR	Input	Motor direction selector. This pin can be dynamically changed after power up.
9	CONFIG	Input	Resistor setting for configuring the handoff threshold. The state of this pin is latched on power up and can not be changed dynamically.
10	PWM	Input	Motor speed control input.
—	Thermal Pad	—	Connect to Ground for maximum thermal efficiency. Thermal pad is on the bottom of the package.

Copyright © 2016, Texas Instruments Incorporated

6 Specifications

6.1 Absolute Maximum Ratings

over operating free-air temperature range (unless otherwise noted) (1) (2)

		MIN	MAX	UNIT
	VCC pin supply voltage	–0.3	6	V
	Motor phase pins (U, V, W)	–1	7.7	V
	Direction, speed indicator input, and speed input (FR, FGS, PWM, CONFIG)	–0.3	6	V
	Speed output (FG)	–0.3	7.7	V
T_J	Junction temperature	–40	150	°C
T_{SDR}	Maximum lead soldering temperature, 10 seconds		260	°C
T_{stg}	Storage temperature	–55	150	°C

(1) Stresses beyond those listed under *Absolute Maximum Ratings* may cause permanent damage to the device. These are stress ratings only, which do not imply functional operation of the device at these or any other conditions beyond those indicated under *Recommended Operating Conditions*. Exposure to absolute-maximum-rated conditions for extended periods may affect device reliability.
(2) All voltages are with respect to ground.

6.2 ESD Ratings

			VALUE	UNIT
$V_{(ESD)}$	Electrostatic discharge	Human-body model (HBM), per ANSI/ESDA/JEDEC JS-001 (1)	±2500	V
		Charged-device model (CDM), per JEDEC specification JESD22-C101 (2)	±1000	

(1) JEDEC document JEP155 states that 500-V HBM allows safe manufacturing with a standard ESD control process.
(2) JEDEC document JEP157 states that 250-V CDM allows safe manufacturing with a standard ESD control process.

6.3 Recommended Operating Conditions

over operating free-air temperature range (unless otherwise noted)

		MIN	MAX	UNIT
VCC	VCC pin supply voltage	2.1	5.5	V
U, V, W	Motor phase pins	–0.7	7	V
FR, FGS, PWM, CONFIG	Direction, speed indicator input, and speed input	–0.1	5.5	V
FG	Speed output	–0.1	7.5	V
T_J	Junction temperature	–40	125	°C

6.4 Thermal Information

THERMAL METRIC (1)		DRV10964 DSN (USON) 10 PINS	UNIT
$R_{\theta\ JA}$	Junction-to-ambient thermal resistance	40.9	°C/W
$R_{\theta\ JC(top)}$	Junction-to-case (top) thermal resistance	46.6	°C/W
$R_{\theta\ JB}$	Junction-to-board thermal resistance	15.8	°C/W
ψ_{JT}	Junction-to-top characterization parameter	0.5	°C/W
ψ_{JB}	Junction-to-board characterization parameter	16	°C/W
$R_{\theta\ JC(bot)}$	Junction-to-case (bottom) thermal resistance	2.9	°C/W

(1) For more information about traditional and new thermal metrics, see the *Semiconductor and IC Package Thermal Metrics* application report, SPRA953.

Copyright © 2016, Texas Instruments Incorporated

6.5 Electrical Characteristics

(VCC = 5 V, T_A = 25°C unless otherwise noted)

PARAMETER		TEST CONDITIONS	MIN	TYP	MAX	UNIT
SUPPLY CURRENT						
I_{VCC}	Operating current	PWM = V_{CC}, no motor connected		6.5		mA
I_{VCC_SLEEP}	Sleep current	PWM = 0 V		15	20	µA
UVLO						
V_{UVLO_H}	Undervoltage threshold high			2	2.1	V
V_{UVLO_L}	Undervoltage threshold low		1.7	1.8		V
V_{UVLO_HYS}	Undervoltage threshold hysteresis		100	200	300	mV
INTEGRATED MOSFET						
R_{DSON}	Series resistance (H+L)	V_{CC} = 5 V; I_{OUT} = 0.5 A		1	1.5	Ω
PWM						
V_{IH_PWM}	Input high threshold		0.45 × VCC			V
V_{IL_PWM}	Input low threshold				0.15 × VCC	V
F_{PWM}	PWM input frequency	Duty cycle >0% and <100%	15		100	kHz
$R_{PU_PWM_VCC}$	PWM pin pullup resistor	Active mode		40		kΩ
		Standby mode		1.5		MΩ
t_{SLEEP}	Sleep entry time	PWM = 0 V and the motor speed less than 10 Hz		1		ms
FG						
I_{OL_FG}	FG sink current	V_{FG} = 0.3 V	5			mA
I_{SC_FG}	FG short circuit current	V_{FG} = 5 V		13	25	mA
FGS and FR						
V_{IH_FGS}	Input high threshold		0.45 × VCC			V
V_{IL_FGS}	Input low threshold				0.15 × VCC	V
V_{IH_FR}	Input high threshold		0.45 × VCC			V
V_{IL_FR}	Input low threshold				0.15 × VCC	V
$R_{PU_FGS_VCC}$	FGS pin pullup resistor	Active Mode		40		kΩ
		Standby Mode		1.5		MΩ
$R_{PU_FR_VCC}$	FR pin pullup resistor			425		kΩ
BEMF COMPARATOR						
V_{offset}	Input offset		-10		10	mV
V_{HYS}	Input hysteresis		14	21	28	mV
T_{delay_r}	Output delay rising	25-mV step			1.5	µs
T_{delay_f}	Output delay falling	25-mV step			1.5	µs
V_{com}	Common mode voltage		0.3		VCC – 0.7	V
RATE LIMITING						
t_{ARamp}	Ramp time for align (from 0 to 50% duty cycle)			300		ms

Copyright © 2016, Texas Instruments Incorporated

Electrical Characteristics (continued)

(VCC = 5 V, T_A = 25°C unless otherwise noted)

PARAMETER		TEST CONDITIONS	MIN	TYP	MAX	UNIT
CONFIG						
$CONFIG_{trip}$	CONFIG pin trip points	Handoff speed threshold 87.5 Hz	0	3.1	5.4	% VCC
		Handoff speed threshold 12.5 Hz	7.3	9.4	11.7	% VCC
		Handoff speed threshold 25 Hz	13.5	15.6	17.9	% VCC
		Handoff speed threshold 37.5 Hz	19.8	21.8	24.1	% VCC
		Handoff speed threshold 50 Hz	26.0	28.1	30.4	% VCC
		Handoff speed threshold 62.5 Hz	32.2	34.4	36.6	% VCC
		Handoff speed threshold 75 Hz	38.5	40.6	42.9	% VCC
		Handoff speed threshold 87.5 Hz	44.7	46.8	48.9	% VCC
		Handoff speed threshold 100 Hz	50.7	53.1	55.1	% VCC
		Handoff speed threshold 112.5 Hz	57.0	59.3	61.3	% VCC
		Handoff speed threshold 125 Hz	63.2	65.6	67.6	% VCC
		Handoff speed threshold 137.5 Hz	69.5	71.9	73.8	% VCC
		Handoff speed threshold 150 Hz	75.6	78.1	80.1	% VCC
		Handoff speed threshold 162.5 Hz	81.9	84.4	86.3	% VCC
		Handoff speed threshold 175 Hz	88.2	90.6	92.6	% VCC
		Handoff speed threshold 187.5 Hz	94.5	96.9	100	% VCC
r_i	CONFIG pin input impedance			10		MΩ
LOCK PROTECTION						
t_{ON_LOCK}	Lock detect time	Abnormal Kt lock		0.3	0.33	s
t_{OFF_LOCK}	Lock release time			5	5.9	s
SHORT CIRCUIT CURRENT PROTECTION						
I_{SHT}	Short circuit current protection			1.8		A
THERMAL SHUTDOWN						
T_{SD}	Thermal shutdown temperature			160		°C
T_{SD_HYS}	Thermal shutdown hysteresis			10		°C

6.6 Typical Characteristics

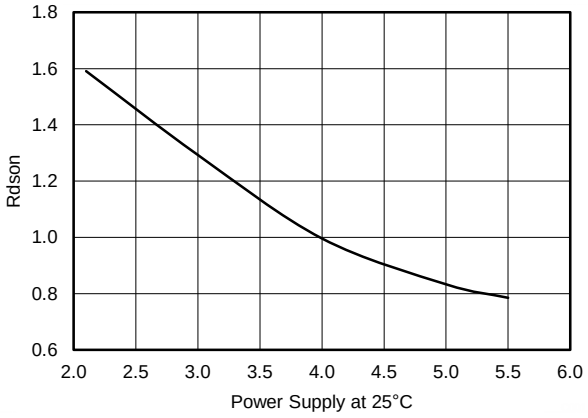

Figure 1. $R_{DS(ON)}$ vs Power Supply at 25°C

Copyright © 2016, Texas Instruments Incorporated

7 Detailed Description

7.1 Overview

The DRV10964 device is a three phase sensorless motor driver with integrated power MOSFETs. It is specifically designed for high efficiency, low noise and low external component count motor drive applications. The proprietary sensorless windowless 180° sinusoidal control scheme provides ultra-quiet motor operation by keeping electrically induced torque ripple small.

Upon start-up, the DRV10964 device will spin the motor in the direction indicated by the FR input pin. The DRV10964 device will operate a three phase BLDC motor using a sinusoidal control scheme. The magnitude of the applied sinusoidal phase voltages is determined by the duty cycle of the PWM pin. As the motor spins, the DRV10964 device provides the speed information at the FG pin.

The DRV10964 device contains an intelligent lock detect function. In the case where the motor is stalled by an external force, the system will detect the lock condition and will take steps to protect itself as well as the motor. The operation of the lock detect circuit is described in detail in *Lock Detection* .

The DRV10964 device also contains several internal protection circuits such as overcurrent protection, overvoltage protection, undervoltage protection, and overtemperature protection.

7.2 Functional Block Diagram

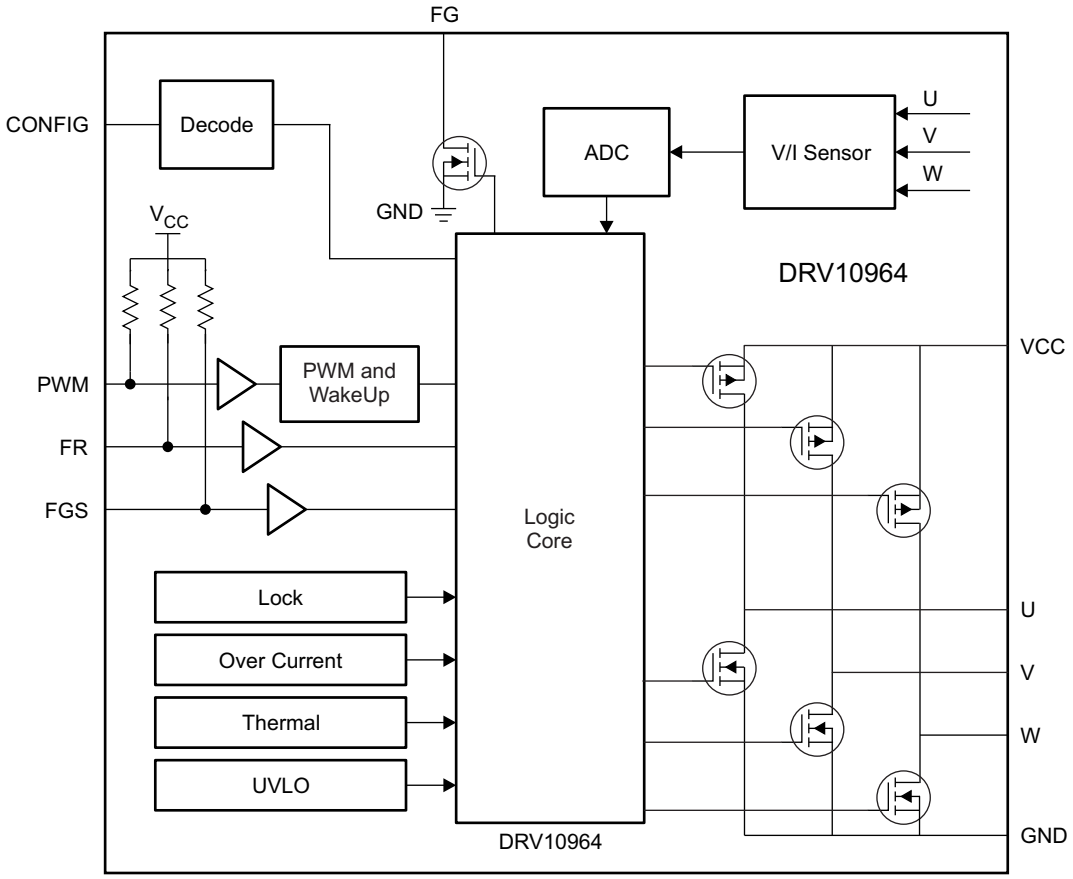

7.3 Feature Description

7.3.1 Sleep Mode

When the PWM commanded duty cycle input is lower than 0.38%, but not 0%, the phase outputs will be put into a high impedance state. The device will stop driving the motor. The device logic is still active during standby mode and the DRV10964 device will consume current as specified by I_{VCC}.

Copyright © 2016, Texas Instruments Incorporated

Feature Description (continued)

When the PWM commanded duty cycle input is driven to 0% (less than VIL_PWM for at least t_{SLEEP} time), the DRV10964 device will enter a low power sleep mode. In sleep mode, most of the circuitry in the device will be disabled to minimize the system current. The current consumption in this state is specified by I_{VCC_SLEEP}.

The device will remain in sleep mode until either the PWM commanded duty cycle input is driven to a logic high (higher than V_{IH_PWM}) or the PWM input pin is allowed to float. If the input is allowed to float an internal pullup resistor will raise the voltage to a logic high level.

Recovering from sleep mode is treated the same as power on condition as illustrated in Figure 14.

As part of the device initialization the motor resistance value and the motor Kt value are measured during the initial motor spin up as shown in Figure 14.

7.3.2 Speed Input and Control

The DRV10964 provides three-phase 25-kHz PWM outputs which have an average value of sinusoidal waveforms from phase to phase. When any phase is measured with reference to ground, the waveform observed will be a PWM encoded sinusoid coupled with third order harmonics as shown in Figure 2. This encoding scheme simplifies the driver requirements because there will always be one phase output that is equal to zero.

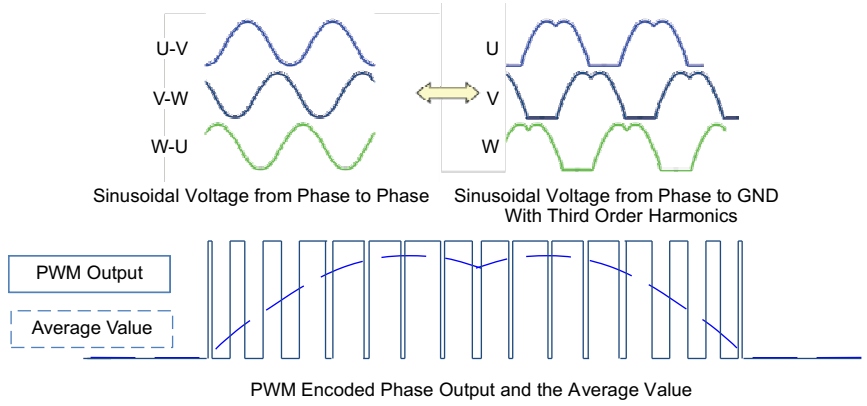

Figure 2. Sinusoidal Phase Encoding Used in DRV10964

The output amplitude is determined by the supply voltage (VCC) and the commanded PWM duty cycle (PWM) as described in Equation 1 and illustrated in Figure 3. The maximum amplitude is applied when the commanded PWM duty cycle is 100%.

$$Vph_{pk} = PWMdc \times VCC \quad (1)$$

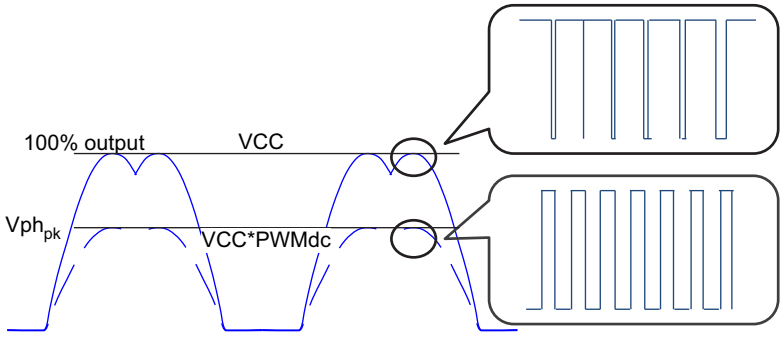

Figure 3. Output Voltage Amplitude Adjustment

The motor speed is controlled indirectly by using the PWM command to control the amplitude of the phase voltages which are applied to the motor.

Copyright © 2016, Texas Instruments Incorporated

Feature Description (continued)

The duty cycle of PWM input is converted into a 9-bit digital number (from 0 to 511). The control resolution is 1/512 ≈ 0.2%. The duty cycle analyzer implements a first order transfer function between the input duty cycle and the 9-bit digital number. This is illustrated in Figure 4 and Figure 5.

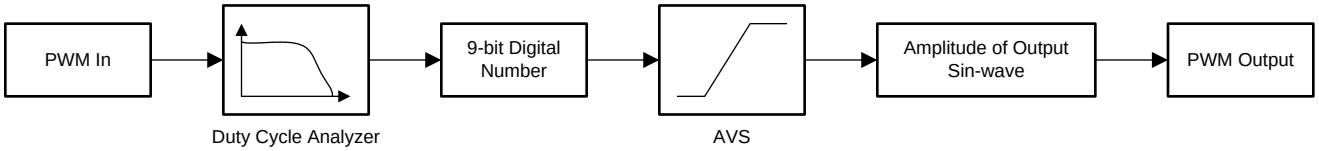

Figure 4. PWM Command Input Controls the Output Peak Amplitude

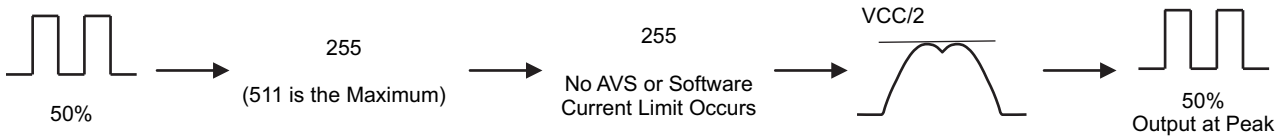

Figure 5. Example of PWM Command Input Controlling the Output

The transfer function between the PWM commanded duty cycle and the output peak amplitude is adjustable in the DRV10964 device. The output peak amplitude is described by Equation 1 when PWM_{dc} > minimum operation duty cycle. The minimum operation duty cycle is 10%. When the PWM commanded duty cycle is lower than minimum operation duty cycle and higher than 0.38%, the output will be controlled at the minimum operation duty cycle. When the input duty cycle is lower than 0.38%, the DRV10964 device will not drive the output, and enters the standby mode. This is illustrated in Figure 6.

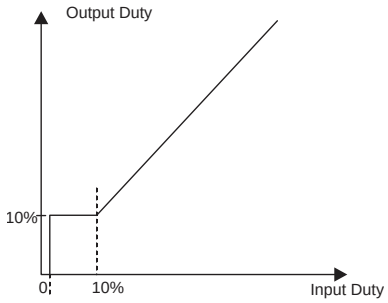

Figure 6. Speed Control Transfer Function

7.3.3 Motor Direction Change

The DRV10964 can be easily configured to drive the motor in either direction by setting the input on the FR (Forward Reverse) pin to a logic 1 or logic 0 state. The direction of commutation as described by the commutation sequence is illustrated in Table 1.

Table 1. Motor Direction Phase Sequencing

	FR = 0	FR = 1
Motor direction	U->V->W	U->W->V

Copyright © 2016, Texas Instruments Incorporated

7.3.4 Motor Frequency Feedback (FG)

During operation of the DRV10964 device, the FG pin provides an indication of the speed of the motor. The output provided on this pin is configured by applying a logic signal to the FGS pin.

The formula to determine the speed of the motor is:

IF FGS = 0, RPM = (FREQFG × 60)/number of pole pairs (2)

IF FGS = 1, RPM = (FREQFG × 60 × 3)/number of pole pairs (3)

During Open Loop Acceleration the FG pin will provide an indication of the frequency of the signal which is driving the motor. The lock condition of the motor is not known during Open Loop Acceleration so it is possible that the FG could be toggling during this time even though the motor is not moving.

The FG pin has built in short circuit protection, which limits the current in the event that the pin is shorted to VCC. The current will be limited to I_{SC_FG}.

7.3.4.1 Tach Feedback During Spin Down

The DRV10964 will provide feedback on the FG pin during spin down of the motor. Figure 7 illustrates the behavior of the FG output. When DRV10964 PWM input is at 0% DRV10964 will provide the output of the U phase comparator on the FG pin until the motor speed drops below 10 Hz. When the motor speed is below 10 Hz the device will enter into the Sleep state and the FG output will be held at a constant value based on the last BEMF zero cross detection.

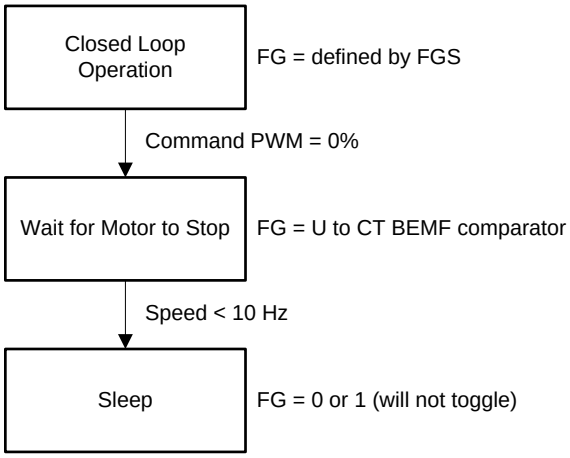

Figure 7. TACH Feedback on Spin Down

7.3.5 Lock Detection

When the motor is locked by some external condition the DRV10964 will detect the lock condition and will take action to protect the motor and the device. The lock condition must be properly detected whether it occurs as a result of a slowly increasing load or a sudden shock.

The DRV10964 reacts to lock conditions by stopping the motor drive. To stop driving the motor the phase outputs are placed into a high impedance state. To prevent the current which is flowing in the motor from being returned to the power supply (VCC) the DRV10964 uses an Ant-Voltage Surge feature. For more information on this feature, see *Anti-Voltage Surge (AVS)*. After successfully transitioning into a high impedance state as the result of a lock condition the DRV10964 will attempt to restart the motor after t_{OFF_LOCK} seconds.

The DRV10964 has a comprehensive lock detect function which includes 5 different lock detect schemes. Each of these schemes detects a particular condition of lock as illustrated in Figure 8.

Copyright © 2016, Texas Instruments Incorporated

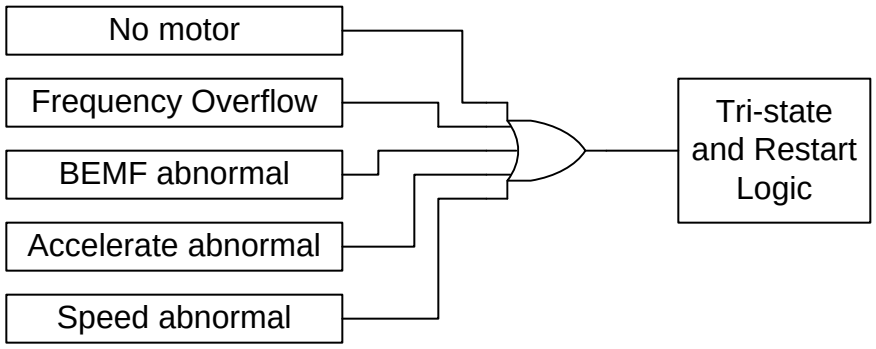

Figure 8. Lock Detect

The behavior of each lock detect scheme is described in the following sections.

7.3.5.1 Lock0: No Motor

The Phase U current is checked after transitioning from open loop to closed loop. If Phase U current is not greater than 50mA then the motor is not connected. This is reported as a locked condition.

7.3.5.2 Lock1: Frequency Overflow

For most applications the maximum electrical frequency of the motor will be less than 3 kHz. If the motor is stopped then the BEMF voltage will be zero. Under this condition, when the DRV10964 device is in the closed loop mode, the sensor less control algorithm will continue to accelerate the electrical commutation rate even though the motor is not spinning. A lock condition is triggered if the electrical frequency exceeds 3 kHz.

7.3.5.3 Lock2: BEMF Abnormal

For any specific motor, the integrated value of BEMF during half of an electrical cycle will be a constant as illustrated by the shaded green area in Figure 9. This is true regardless of whether the motor runs fast or slow. The DRV10964 monitors this value and uses it as a criterion to determine if the motor is in a lock condition.

The DRV10964 uses the integrated BEMF to determine the Kt value of the motor during the initial motor start. Based on this measurement a range of acceptable Kt values is established. This range is between 1/2 x Kt and 4 x Kt During closed loop motor operation the Ktc value is continuously updated. If the calculated Ktc goes beyond the acceptable range a lock condition is triggered. This is illustrated in Figure 10.

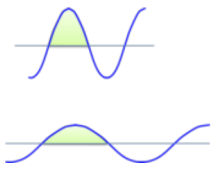

Figure 9. BEMF Integration

Copyright © 2016, Texas Instruments Incorporated

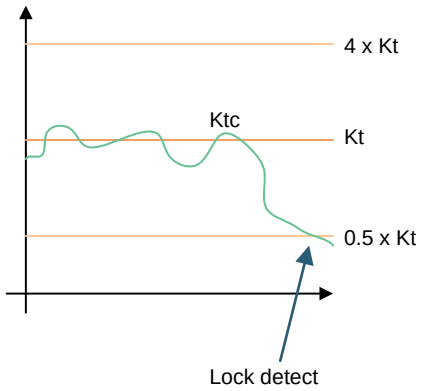

Figure 10. Abnormal Kt Lock Detect

7.3.5.3.1 Lock 3: Accelerate Abnormal

This lock condition is active when the DRV10964 device is operating in the closed loop mode. When the closed loop commutation rate becomes lower than 1/2 of the previous commutation period then this is an indication that the motor is not moving. Under this condition the accelerate abnormal condition will be triggered.

7.3.5.4 Lock4: Speed Abnormal

If the motor is in normal operation the motor BEMF will always be less than the voltage applied to the phase. The DRV10964 sensorless control algorithm is continuously updating the value of the motor BEMF based on the speed of the motor and the motor Kt as shown in Figure 11. If the calculated value for motor BEMF is higher than the applied voltage (U) for a certain period of time (t_{ON_LOCK}) then there is an error in the system. The calculated value for motor BEMF is wrong or the motor is out of phase with the commutation logic. When this condition is detected a lock detect is triggered.

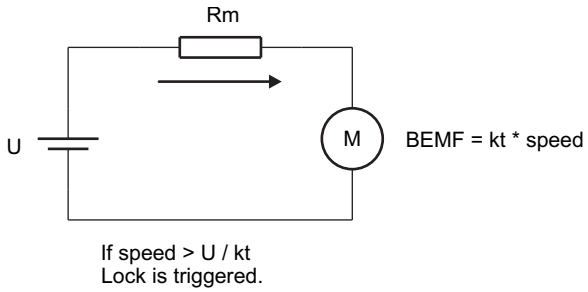

Figure 11. BEMF Monitoring

7.3.6 Short Circuit Current Protection

The short circuit current protection function shuts off drive to the motor by placing the motor phases into a high impedance state if the current in any motor phase exceeds the short circuit protection limit I_{SHT}. The DRV10964 device will go through the initialization sequence and will attempt to restart the motor after the short circuit condition is removed. This function is intended to protect the device and the motor from catastrophic failure when subjected to a short circuit condition.

7.3.7 Anti-Voltage Surge (AVS)

Under normal operation the DRV10964 acts to transfer energy from the power supply to the motor to generate torque, which results in angular rotation of the motor. Under certain conditions, however, energy which is stored in the motor in the form of inductive energy or angular momentum (mechanical energy) can be returned to the power supply. This can happen whenever the output voltage is quickly interrupted or whenever the voltage applied to the motor becomes less than the BEMF voltage generated by the motor. The energy which is returned to the supply can cause the supply voltage to increase. This condition is referred to as voltage surge.

Copyright © 2016, Texas Instruments Incorporated

The DRV10964 includes an anti-voltage-surge (AVS) feature which prevents energy from being transferred from the motor to the power supply. This feature helps to protect the DRV10964 as well as any other components that are connected to the power supply (VCC).

7.3.7.1 Protecting Against the Return of Mechanical Energy

Mechanical energy is typically returned to the power supply when the speed command is abruptly decreased. If the voltage applied to the phase becomes less than the BEMF voltage then the motor will work as a generator and current will flow from the motor back to VCC. This is illustrated in Figure 12. To prevent this from happening, the DRV10964 buffers the speed command value and limits the rate at which it is able to change. The AVS function acts to ensure that the effective output amplitude (U) is maintained to be larger than the BEMF voltage. This prevents current from becoming less than zero. The value of BEMF used to perform this function is calculated by the motor Kt and the motor speed.

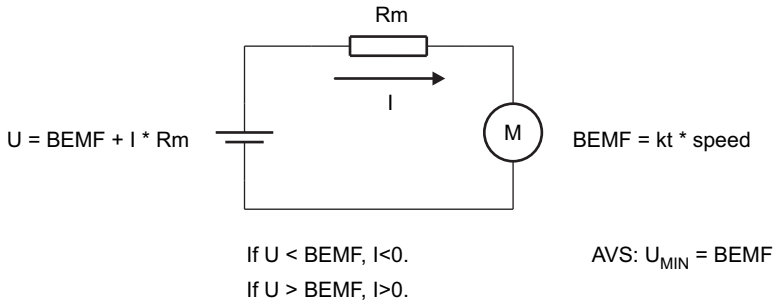

Figure 12. Mechanical AVS

7.3.7.2 Protecting Against the Return of Inductive Energy

When the DRV10964 suddenly stops driving the motor, the current which is flowing in the motor's inductance will continue to flow. It flows through the intrinsic body diodes in the mosfets and charges VCC. An example of this behavior is illustrated by the two pictures in the top half of Figure 13. When the driver is active, the current flows from S1 to the motor and then to S6 and is returned to ground. When the driver is placed into a high impedance (tri-state) mode, the current goes flows from ground through the body diode of S2 to the motor and then through the body diode of S5 to VCC. The current will continue to flow through the motor's inductance in this direction until the inductive energy is dissipated.

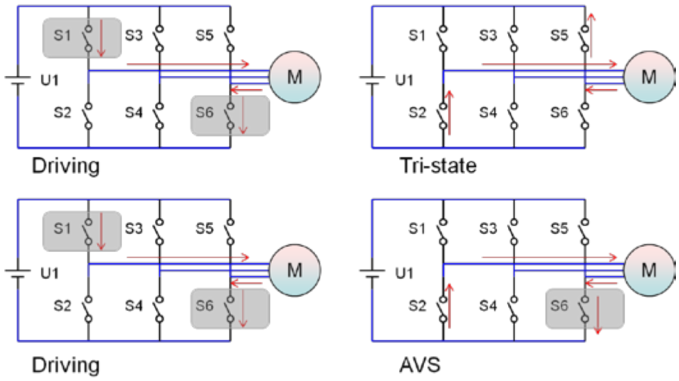

Figure 13. Inductive AVS

The lower two pictures in Figure 13 illustrate how the AVS circuit in the DRV10964 device prevents this energy from being returned to the supply. When the AVS condition is detected the DRV10964 device will act to turn on the low side device designated as S6. This allows the current flowing in the motor inductance to be returned to ground instead of being directed to the VCC supply voltage.

Copyright © 2016, Texas Instruments Incorporated

7.3.8 Overtemperature Protection

The DRV10964 contains a thermal shut down function which disables motor operation when the device junction temperature has exceeded T_{SD}. Motor operation will resume when the junction temperature becomes lower than T_{SD} - T_{SD_HYS}.

7.3.9 Undervoltage Protection

The DRV10964 contains an undervoltage lockout feature, which prevents motor operation whenever the supply voltage (VCC) becomes too low. Upon power up, the DRV10964 will operate once VCC rises above V_{UVLO_H}. The DRV10964 will continue to operate until VCC falls below V_{UVLO_L}.

7.3.10 CONFIG Configuration

The CONFIG pin provides an option for selecting the open loop to closed loop threshold. This is accomplished with the selection of a resistor divider between VCC and GND which is connected to the CONFIG pin. See *Electrical Characteristics*.

7.4 Device Functional Modes

7.4.1 Spin up Settings

7.4.1.1 Motor Kt and Rm

DRV10964 utilizes information about the motor's torque constant and resistance to control motor timing. These parameters are measured during the initial motor spin up as shown in Figure 14.

7.4.1.2 Motor Start

DRV10964 will start the motor using a procedure which is illustrated in Figure 14.

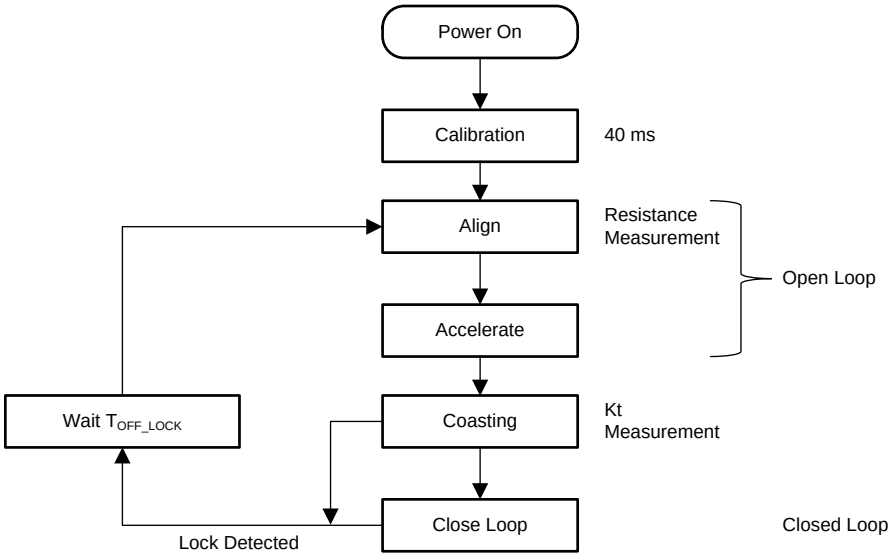

Figure 14. DRV10964 Initialization and Motor Start-up Sequence

7.4.1.3 Initial Speed Detect (ISD)

The ISD function is used to identify the initial condition of the motor.

Phase-to-phase comparators are used to detect the zero crossings of the motor's BEMF voltage while it is coasting (motor phase outputs are in high-impedance state). Figure 15 shows the configuration of the comparators.

Copyright © 2016, Texas Instruments Incorporated

Device Functional Modes (continued)

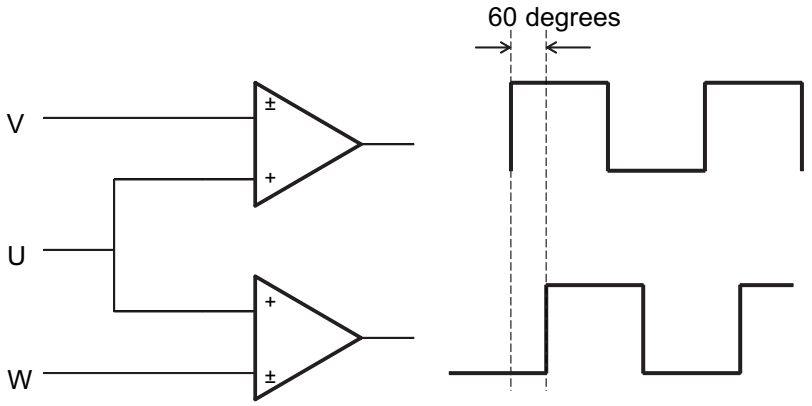

Figure 15. Initial Speed Detect Function

The motor speed is determined by measuring the time between two rising edges of either of the comparators.

If neither of the comparator outputs toggle for a given amount of time (80 ms), the condition is defined as stationary and the Align state will begin. If the comparators are toggling at a speed that is greater than this threshold then the DRV10964 will wait for the motor to slow down until the toggling is less than the threshold and it can be treated as stationary.

7.4.1.4 Align

To align the rotor to the commutation logic the DRV10964 applies a 50% duty cycle on phases V and W while holding phase U at GND. This condition is maintained for 0.64 seconds. In order to avoid a sudden change in current that could result in undesirable acoustics the 50% duty cycle is applied gradually to the motor over 0.3 seconds.

7.4.1.5 Handoff and Closed Loop

When the motor accelerates to the velocity defined by the voltage applied to the CONFIG pin, commutation control transitions from open loop mode to closed loop mode. The commutation drive sequence and timing is determined by the internal control algorithm and the applied voltage is determined by the PWM commanded duty cycle input.

The selection of handoff threshold can be determined by experimental testing. The goal is to choose a handoff threshold that is as low as possible and allows the motor to smoothly and reliably transition between the open loop acceleration and the closed loop acceleration. Normally higher speed motors (maximum speed) require a higher handoff threshold because higher speed motors have lower Kt and as a result lower BEMF. Table 2 shows the configurable settings for the handoff threshold. Maximum speed in electrical hertz are shown as a guide to assist in identifying the appropriate handoff speed for a particular application.

Table 2. Motor Handoff Speed Threshold Options

MAXIMUM SPEED (Hz)	Hand Off Frequency (Hz)	CONFIG[3:0]
350 to approximately 400	87.5	0x0
<100	12.5	0x1
100 to approximately 150	25	0x2
150 to approximately 200	37.5	0x3
200 to approximately 250	50	0x4
250 to approximately 300	62.5	0x5
300 to approximately 350	75	0x6
350 to approximately 400	87.5	0x7
400 to approximately 450	100	0x8
450 to approximately 500	112.5	0x9

Copyright © 2016, Texas Instruments Incorporated

Device Functional Modes (continued)

Table 2. Motor Handoff Speed Threshold Options (continued)

MAXIMUM SPEED (Hz)	Hand Off Frequency (Hz)	CONFIG[3:0]
500 to approximately 560	125	0xA
560 to approximately 620	137.5	0xB
620 to approximately 700	150	0xC
700 to approximately 800	162.5	0xD
800 to approximately 900	175	0xE
>900	187.5	0xF

Copyright © 2016, Texas Instruments Incorporated

8 Application and Implementation

NOTE

Information in the following applications sections is not part of the TI component specification, and TI does not warrant its accuracy or completeness. TI's customers are responsible for determining suitability of components for their purposes. Customers should validate and test their design implementation to confirm system functionality.

8.1 Application Information

DRV10964 is used in sensorless three-phase BLDC motor control. The driver provides a high performance, high reliability, flexible and simple solution for compute fan applications. The following design shows a common application of the DRV10964.

8.2 Typical Application

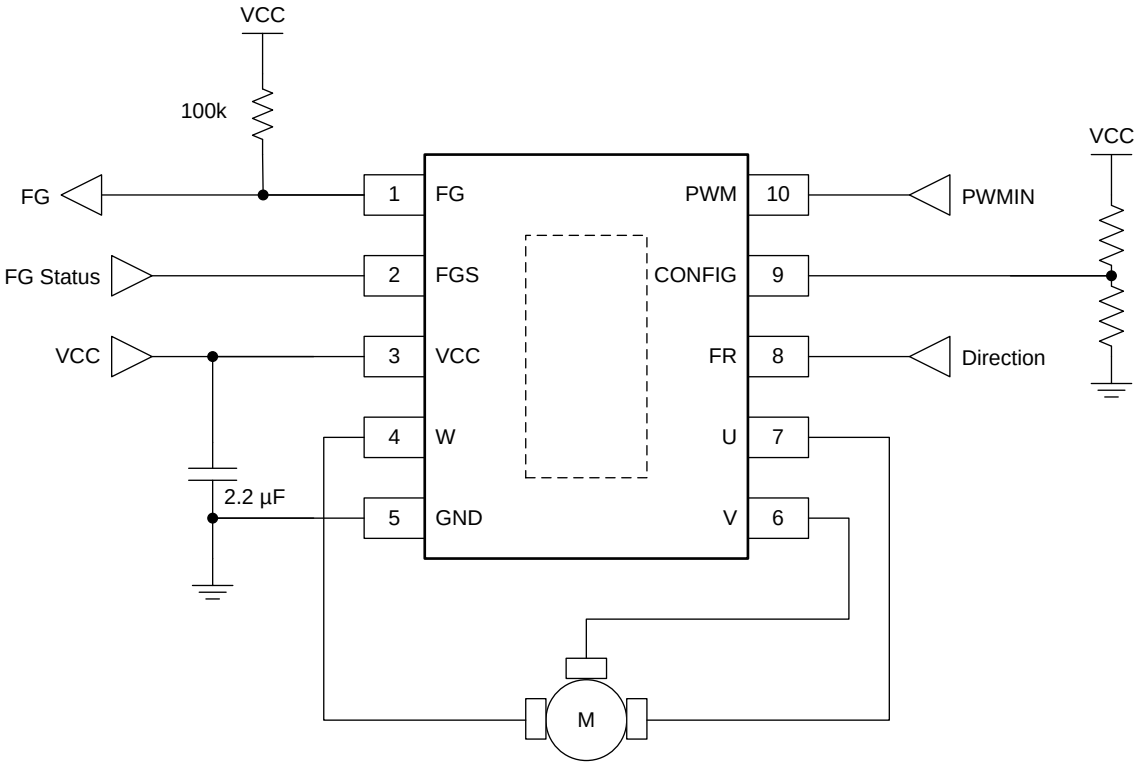

Figure 16. Typical Application Schematic

8.2.1 Design Requirements

Table 3 lists several key motor characteristics and recommended ranges which the DRV10964 is capable of driving. However, that does not necessarily mean motors outside these boundaries cannot be driven by DRV10964.

Recommended ranges listed in Table 3 can serve as a general guideline to quickly decide whether DRV10964 is a good fit for an application. Motor performance is not ensured for all uses.

Table 3. Key Motor Characteristics and Recommended Ranges

	Rm (Ω)	Lm (µH)	Kt (mV/Hz)	f_{FG_max} (Hz)
Recommended Value	2.5 ~ 10	50 ~ 1000	1 ~ 100	1300

Copyright © 2016, Texas Instruments Incorporated

Rm - Motor phase resistance between phase to phase;

Lm - Motor phase to phase inductance between phase to phase;

Kt - Motor BEMF constant from phase to center tape;

f_{FG_max} - Maximum electrical frequency. Maximum motor speed can be calculated from:

- If FGS = 1, RPM = (f_{FG_max} × 3 x 60)/ number of pole pairs
- If FGS = 0, RPM = (f_{FG_max} × 120)/ number of pole pairs

8.2.2 Detailed Design Procedure

1. Refer to *Design Requirements* and make sure your system meets the recommended application range.

2. Refer to the DRV10964 Tuning Guide and measure the motor parameters.

3. Refer to the DRV10964 Tuning Guide. Configure the parameters using DRV10964 GUI, and optimize the motor operation. The Tuning Guide takes the user through all the configurations step by step, including: start-up operation, closed-loop operation, current control, initial positioning, lock detection, and anti-voltage surge.

4. Build your hardware based on Layout Guidelines.

5. Connect the device into system and validate your system solution

8.2.3 Application Curves

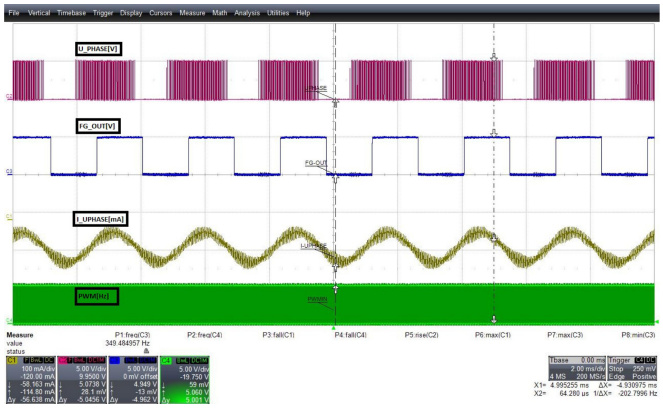

Figure 17. Reference PCB Sinusoidal Current Profile

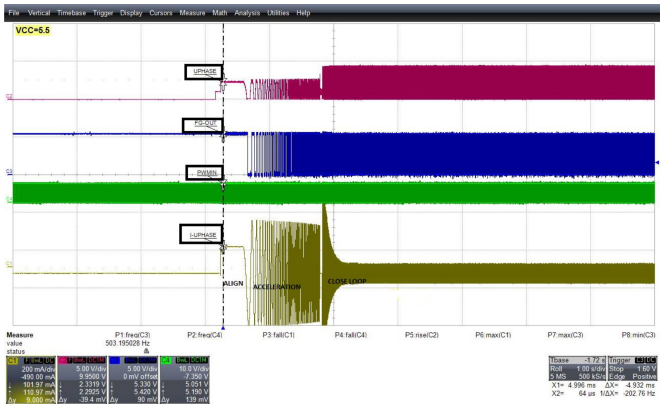

NOTE: FG_OUT Signal Being Held HIGH During Locked Rotor Condition (Stall)

Figure 18. Reference PCB Start-Up (Align-Acceleration) Profile

Copyright © 2016, Texas Instruments Incorporated

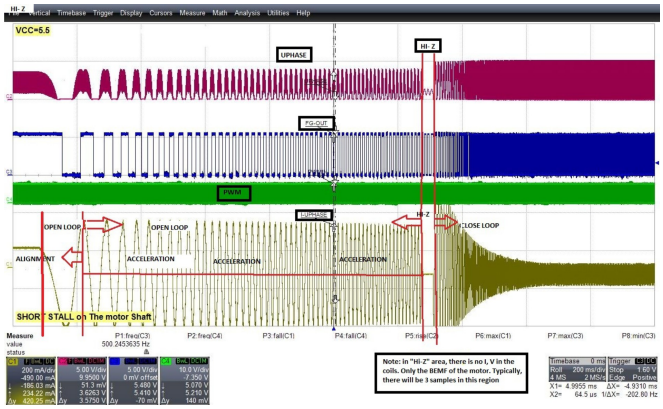

Figure 19. Reference PCB Open Loop and Close Loop

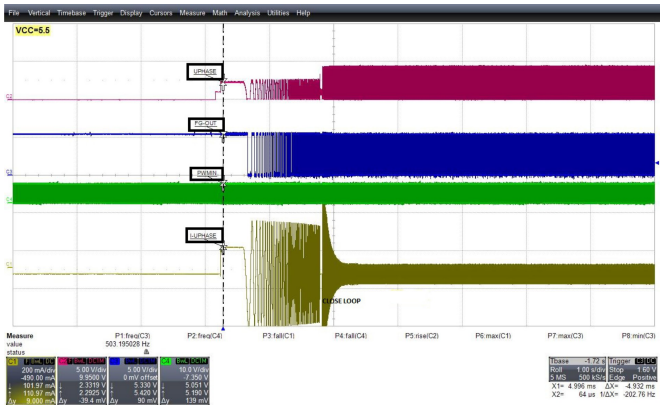

Figure 20. Reference PCB Closed Loop

9 Power Supply Recommendations

The DRV10964 is designed to operate from an input voltage supply, V(VCC), range from 2.1 and 5.5 V. The user must place a 2.2-µF ceramic capacitor rated for VCC as close as possible to the VCC and GND pin.

10 Layout

10.1 Layout Guidelines

The package uses an exposed pad to remove heat from the device. For proper operation, this pad must be thermally connected to copper on the PCB to dissipate heat. On a multi-layer PCB with a ground plane, this can be accomplished by adding a number of vias to connect the thermal pad to the ground plane. On PCBs without internal planes, copper area can be added on either side of the PCB to dissipate heat. If the copper area is on the opposite side of the PCB from the device, thermal vias are used to transfer the heat between top and bottom layers.

For details about how to design the PCB, refer to TI application report, *PowerPAD™ Thermally Enhanced Package* (SLMA002), and TI application brief, *PowerPAD™ Made Easy* (SLMA004), available at www.ti.com. In general, the more copper area that can be provided, the more power can be dissipated.

10.2 Layout Example

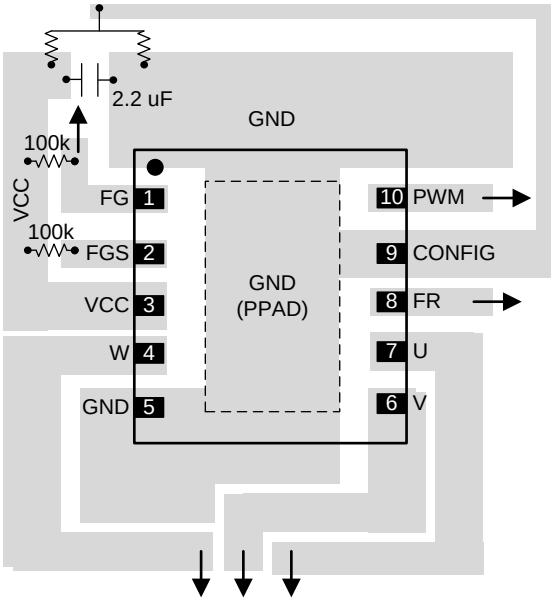

Figure 21. DRV10964 Layout Example

Copyright © 2016, Texas Instruments Incorporated

11 Device and Documentation Support

11.1 Community Resources

The following links connect to TI community resources. Linked contents are provided "AS IS" by the respective contributors. They do not constitute TI specifications and do not necessarily reflect TI's views; see TI's Terms of Use.

TI E2E™ Online Community ***TI's Engineer-to-Engineer (E2E) Community.*** Created to foster collaboration among engineers. At e2e.ti.com, you can ask questions, share knowledge, explore ideas and help solve problems with fellow engineers.

Design Support ***TI's Design Support*** Quickly find helpful E2E forums along with design support tools and contact information for technical support.

11.2 Trademarks

E2E is a trademark of Texas Instruments.
All other trademarks are the property of their respective owners.

11.3 Electrostatic Discharge Caution



These devices have limited built-in ESD protection. The leads should be shorted together or the device placed in conductive foam during storage or handling to prevent electrostatic damage to the MOS gates.

11.4 Glossary

SLYZ022 — *TI Glossary*.

This glossary lists and explains terms, acronyms, and definitions.

12 Mechanical, Packaging, and Orderable Information

The following pages include mechanical, packaging, and orderable information. This information is the most current data available for the designated devices. This data is subject to change without notice and revision of this document. For browser-based versions of this data sheet, refer to the left-hand navigation.

Copyright © 2016, Texas Instruments Incorporated

PACKAGING INFORMATION

Orderable Device	Status (1)	Package Type	Package Drawing	Pins	Package Qty	Eco Plan (2)	Lead/Ball Finish (6)	MSL Peak Temp (3)	Op Temp (°C)	Device Marking (4/5)	Samples
DRV10964FFDSNR	ACTIVE	SON	DSN	10	3000	Green (RoHS & no Sb/Br)	NIPDAU	Level-2-260C-1 YEAR	-40 to 125	964FF1	Samples
DRV10964FFDSNT	ACTIVE	SON	DSN	10	250	Green (RoHS & no Sb/Br)	NIPDAU	Level-2-260C-1 YEAR	-40 to 125	964FF1	Samples

(1) The marketing status values are defined as follows:
ACTIVE: Product device recommended for new designs.
LIFEBUY: TI has announced that the device will be discontinued, and a lifetime-buy period is in effect.
NRND: Not recommended for new designs. Device is in production to support existing customers, but TI does not recommend using this part in a new design.
PREVIEW: Device has been announced but is not in production. Samples may or may not be available.
OBSOLETE: TI has discontinued the production of the device.

(2) **RoHS:** TI defines "RoHS" to mean semiconductor products that are compliant with the current EU RoHS requirements for all 10 RoHS substances, including the requirement that RoHS substance do not exceed 0.1% by weight in homogeneous materials. Where designed to be soldered at high temperatures, "RoHS" products are suitable for use in specified lead-free processes. TI may reference these types of products as "Pb-Free".
RoHS Exempt: TI defines "RoHS Exempt" to mean products that contain lead but are compliant with EU RoHS pursuant to a specific EU RoHS exemption.
Green: TI defines "Green" to mean the content of Chlorine (Cl) and Bromine (Br) based flame retardants meet JS709B low halogen requirements of <=1000ppm threshold. Antimony trioxide based flame retardants must also meet the <=1000ppm threshold requirement.

(3) MSL, Peak Temp. - The Moisture Sensitivity Level rating according to the JEDEC industry standard classifications, and peak solder temperature.

(4) There may be additional marking, which relates to the logo, the lot trace code information, or the environmental category on the device.

(5) Multiple Device Markings will be inside parentheses. Only one Device Marking contained in parentheses and separated by a "~" will appear on a device. If a line is indented then it is a continuation of the previous line and the two combined represent the entire Device Marking for that device.

(6) Lead/Ball Finish - Orderable Devices may have multiple material finish options. Finish options are separated by a vertical ruled line. Lead/Ball Finish values may wrap to two lines if the finish value exceeds the maximum column width.

Important Information and Disclaimer: The information provided on this page represents TI's knowledge and belief as of the date that it is provided. TI bases its knowledge and belief on information provided by third parties, and makes no representation or warranty as to the accuracy of such information. Efforts are underway to better integrate information from third parties. TI has taken and continues to take reasonable steps to provide representative and accurate information but may not have conducted destructive testing or chemical analysis on incoming materials and chemicals. TI and TI suppliers consider certain information to be proprietary, and thus CAS numbers and other limited information may not be available for release.

In no event shall TI's liability arising out of such information exceed the total purchase price of the TI part(s) at issue in this document sold by TI to Customer on an annual basis.

DSN (S–PUSON–N10) PLASTIC QUAD FLATPACK NO–LEAD

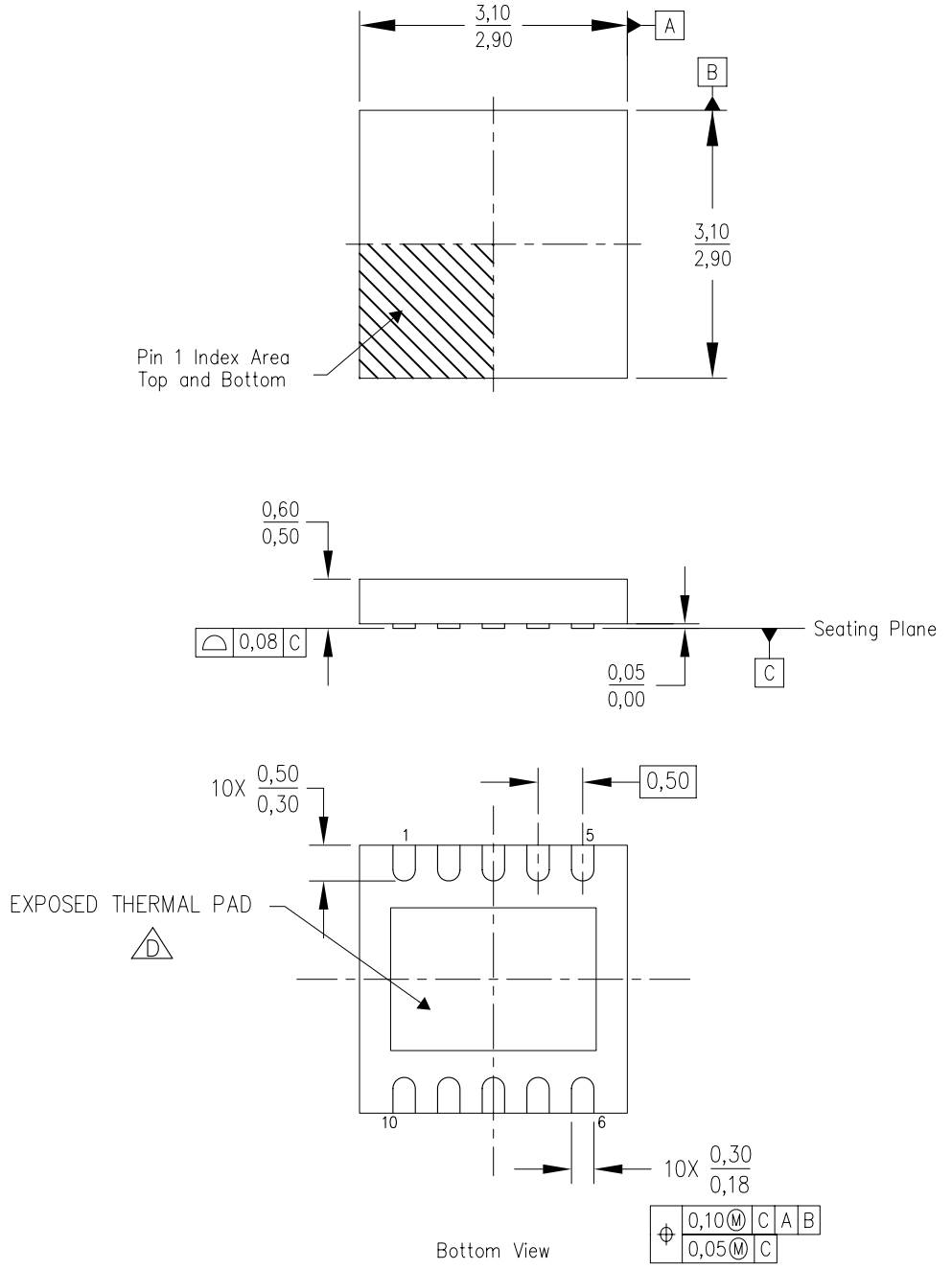

4209052/B 11/10

NOTES:
A. All linear dimensions are in millimeters. Dimensioning and tolerancing per ASME Y14.5–1994.
B. This drawing is subject to change without notice.
C. QFN (Quad Flatpack No–Lead) package configuration.
D. The package thermal pad must be soldered to the board for thermal and mechanical performance. See the Product Data Sheet for details regarding the exposed thermal pad dimensions.

IMPORTANT NOTICE AND DISCLAIMER

TI PROVIDES TECHNICAL AND RELIABILITY DATA (INCLUDING DATASHEETS), DESIGN RESOURCES (INCLUDING REFERENCE DESIGNS), APPLICATION OR OTHER DESIGN ADVICE, WEB TOOLS, SAFETY INFORMATION, AND OTHER RESOURCES “AS IS” AND WITH ALL FAULTS, AND DISCLAIMS ALL WARRANTIES, EXPRESS AND IMPLIED, INCLUDING WITHOUT LIMITATION ANY IMPLIED WARRANTIES OF MERCHANTABILITY, FITNESS FOR A PARTICULAR PURPOSE OR NON-INFRINGEMENT OF THIRD PARTY INTELLECTUAL PROPERTY RIGHTS.

These resources are intended for skilled developers designing with TI products. You are solely responsible for (1) selecting the appropriate TI products for your application, (2) designing, validating and testing your application, and (3) ensuring your application meets applicable standards, and any other safety, security, or other requirements. These resources are subject to change without notice. TI grants you permission to use these resources only for development of an application that uses the TI products described in the resource. Other reproduction and display of these resources is prohibited. No license is granted to any other TI intellectual property right or to any third party intellectual property right. TI disclaims responsibility for, and you will fully indemnify TI and its representatives against, any claims, damages, costs, losses, and liabilities arising out of your use of these resources.

TI’s products are provided subject to TI’s Terms of Sale (www.ti.com/legal/termsofsale.html) or other applicable terms available either on ti.com or provided in conjunction with such TI products. TI’s provision of these resources does not expand or otherwise alter TI’s applicable warranties or warranty disclaimers for TI products.

Mailing Address: Texas Instruments, Post Office Box 655303, Dallas, Texas 75265
Copyright © 2020, Texas Instruments Incorporated