Linear Driver for PIN Diode Attenuators

V 4.00

DR65-0002

Features

- Linearizes PIN Diode Attenuators Over a Wide Attenuation Range
- Output Currents up to 12 mA
- Operates with a Single Supply Voltage of +3V to +12V
- Low Quiescent Currents
- Single Control Voltage
- SOW-16, Wide Body Plastic Package
- Test Boards are Available
- Tape and Reel Packaging Available

Description

M/A-COM's DR65-0002 is a break point free driver that produces a logarithmic output current suitable for linearizing PIN diode based shunt attenuators. This driver, in conjunction with customer defined external components, produces a linear transfer function (dB/V) between the input control voltage of the driver and the attenuation output of the PIN attenuator. The DR65-0002 has been optimized for linearizing M/A-COM's AT10-0009 or AT10-0017 attenuators, but will function well with most types of cathode grounded, PIN attenuators. The driver is packaged in a SOW-16 package for commercial SMT applications. A typical schematic for a 30 dB, 7.5 dB/V linear attenuator is shown in Figure 1.

Circuit Description:

(Reference Figures 1 and 2)

The input divider, R1 and the sum of R2 and R3, sets the overall transfer function of the circuit. To increase the transfer function, decrease the Control Voltage and the value of R1. Varying the value of R4 will optimize the linearity of the circuit. One can achieve a very linear transfer function (<± 1 dB/V) by driving the attenuator over a smaller portion of its dynamic range. In the case of the AT10-0009 and AT10-0017 attenuators, this would be limited to a dynamic range of 28 and 25 dB, respectively. Temperature compensation is a function temperature coefficient of the thermistor, R3, and the ratio of R2 to R3, and can only be optimized once the transfer function and linearity component values have been established.

SOW-16

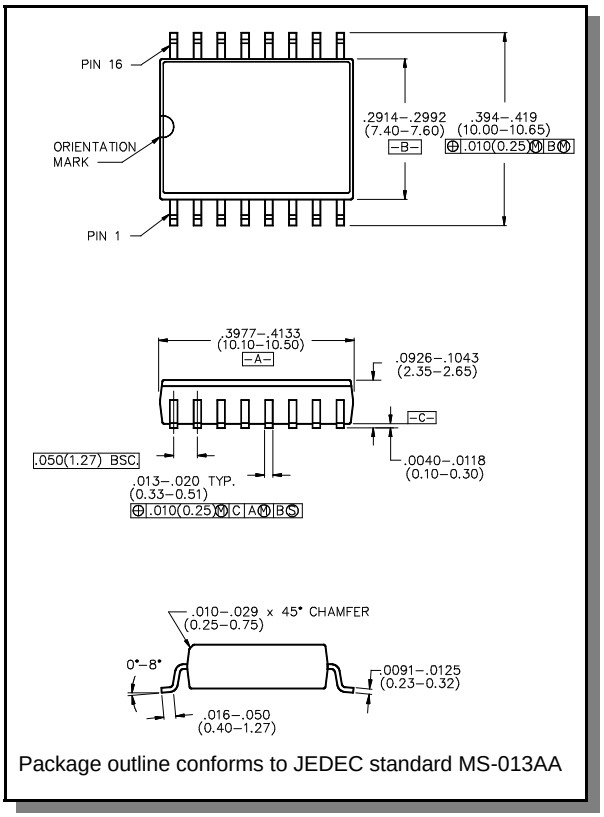

Package outline conforms to JEDEC standard MS-013AA

Figure 1

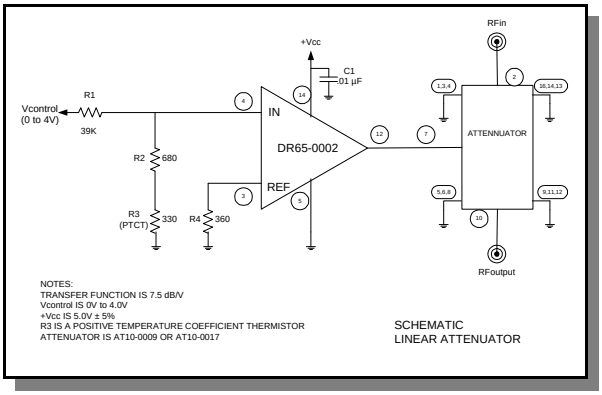

SCHEMATIC
LINEAR ATTENUATOR

Electrical Specifications, T_A = +25°C, Reference Figure 1

Parameter	Test Conditions	Units	Min	Typical	Max
Output Drive Current	Load Dependent	mA	10	—	—
$+V_{CC}$ Supply Range	—	V	3.0	5.0	12
$+V_{CC}$ Supply Tolerance	—	%	—	5	—
$+V_{CC}$ Quiescent Current	No Load	mA	—	1.0	2.0
Linearity	Application Dependent	dB	± 1	± 2.5	—
Transfer Function	Application Dependent	dB/V	3	7.5	10
Settling Time	50% Ctl to 90%/10% RF	µS	—	50	—

Figure 2—Typical Attenuation Error

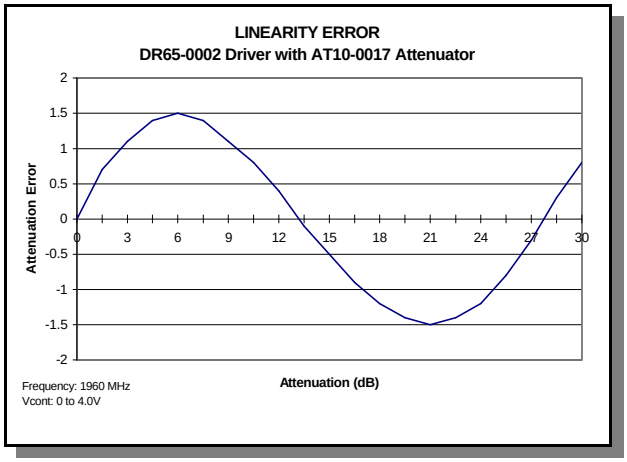

Absolute Maximum Ratings [1]

Parameter	Absolute Maximum
$+V_{CC}$	+20 V
Input +	± 5 V
REF	± 5 V
Output Current	20 mA
Operating Temperature	-40ºC to +85ºC
Storage Temperature	-65ºC to +125ºC
Package Power Dissipation	150 mW
Lead Temperature	300ºC for 10 seconds

1. Operation of this device above any one of these parameters may cause permanent damage.

Pin Configuration

Pin #	Function	Pin #	Function
1	N/C	9	N/C
2	N/C	10	N/C
3	REF	11	N/C
4	INPUT +	12	OUTPUT
5	GND	13	N/C
6	N/C	14	+ V_{CC}
7	N/C	15	N/C
8	N/C	16	N/C

Ordering Information

Part Number	Package
DR65-0002	Bulk Packaging
DR65-0002TR	Tape & Reel (1K Reel)
DR65-0002-TBG	Test Board with Circuit per Figure 1 (AT10-0009, GSM Attenuator)
DR65-0002-TBP	Test Board with Circuit per Figure 1 (AT10-0017, PCS Attenuator)

Specifications subject to change without notice.

- **North America:** Tel. (800) 366-2266
- **Asia/Pacific:** Tel.+81-44-844-8296, Fax +81-44-844-8298
- **Europe:** Tel. +44 (1344) 869 595, Fax+44 (1344) 300 020

tyco / Electronics MACOM

Visit www.macom.com for additional data sheets and product information.