August 3, 2011

DATATRONIC
DISTRIBUTION, INC.

SHIELDED SMD INDUCTOR DR357-3 SERIES

Features

- **Low Profile Surface Mount Design**
- **Flat Top for Pick and Place**
- **Inductance Range from 1.3µH to 330.0µH**
- **Operating Temp. -40°C to +105°C**
- **Tinned Leads with Leaded Solder is Available** (note 6)



ELECTRICAL SPECIFICATIONS AT 25ºC

Part No.	Inductance (µH) ± 30%	DCR (Ω) Max.	I_{rated} (A) Max.
DR357-3-132	1.3	0.008	10.00
DR357-3-252	2.5	0.010	7.50
DR357-3-382	3.8	0.013	6.00
DR357-3-522	5.2	0.022	5.50
DR357-3-702	7.0	0.027	4.80
DR357-3-103	10.0	0.035	4.40
DR357-3-153	15.0	0.050	3.60
DR357-3-223	22.0	0.073	2.90
DR357-3-333	33.0	0.093	2.30
DR357-3-473	47.0	0.128	2.10
DR357-3-683	68.0	0.213	1.50
DR357-3-104	100.0	0.304	1.35
DR357-3-154	150.0	0.506	1.15
DR357-3-224	220.0	0.756	0.92
DR357-3-334	330.0	1.090	0.70

MECHANICAL OUTLINES

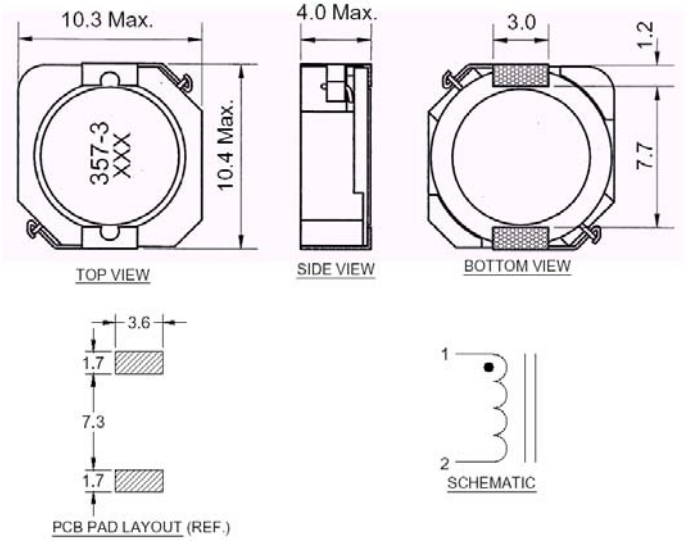

Notes:

1. All dimensions are shown in millimeter “mm”
2. General tolerance ±0.2mm, unless other specified
3. Inductance Test: 100kHz, 0.1Vrms
4. I_{rated} for an approximate 40°C temperature rise
5. I_{rated} for an approximate 35% drop maximum of the initial value
6. For non-RoHS parts, replace DR prefix with 42- (e.g. DR357-3 becomes 42-357-3)
7. Terminal finish is compliant to RoHS requirements. Solder in accordance with J-STD-020D

DATATRONIC: 28151 Highway 74, Romoland, CA 92585 Tel: 951-928-7700 Fax: 951-928-7701 Email: ddisales@datatronics.com
499 King’s Road, Hong Kong Tel: (852) 2562 3858, (852) 2564 8477 Fax: (852) 2565 7214, (852) 2563 1290
All specification are subject to change without notice.