March 6, 2007

DATATRONIC DISTRIBUTION, INC.

SMD INDUCTOR DR356-3 SERIES

Features

- **Height: 3.0mm Max**
- **Frequency Range: 10kHz to 2MHz**
- **Operating Temperature: -40°C to +155°C**
- **Tinned Leads with Leaded Solder is Available** (note 4)

Electrical Specifications @ 25ºC

PART NUMBER	INDUCTANCE (µH) 0.1V @ 100kHz	DCR (mΩ) Max.	Isat (A) Typ. L Drop 10%	Isat (A) Typ. L Drop 15%	Irms (A) Max. See Note 2
DR356-3-101	0.10 ± 20%	1.2	22	32	19

MECHANICAL SPECIFICATIONS

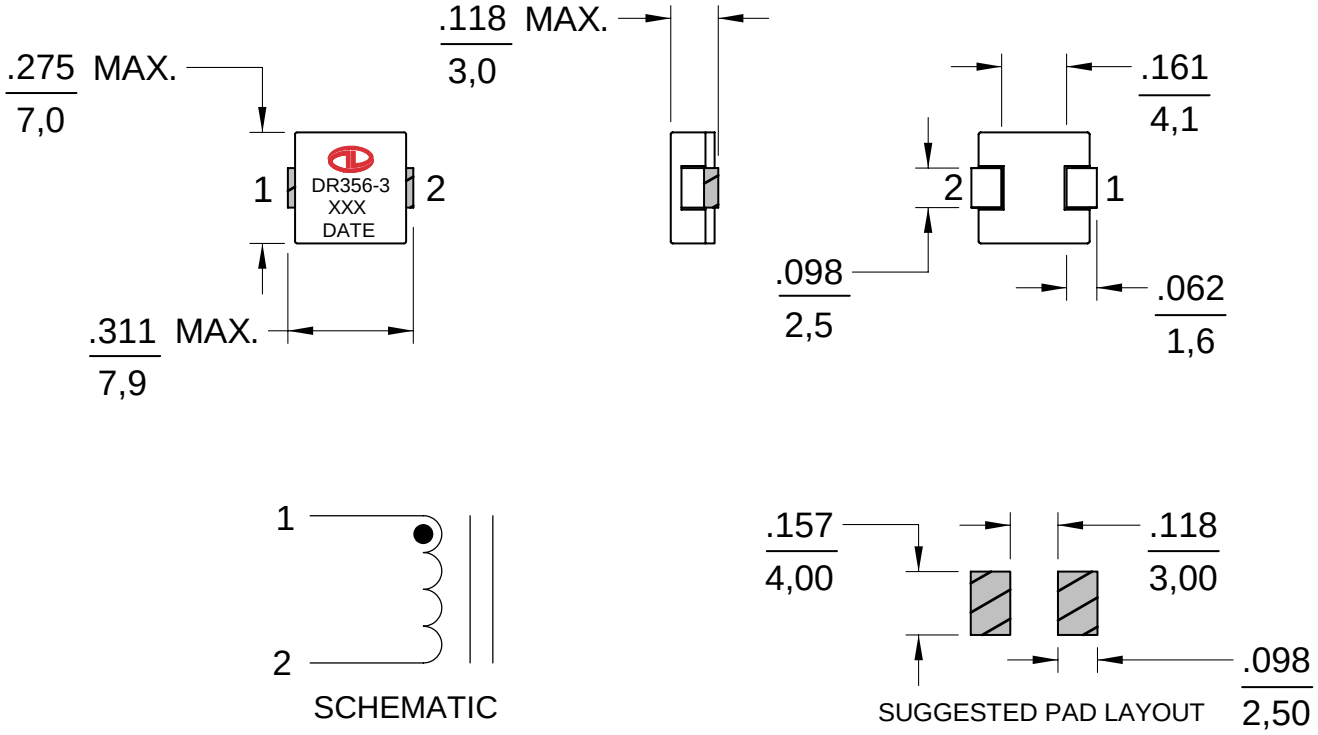

NOTES:

1. Dimensions are shown in inches/millimeters
   Unless otherwise specified, tolerance = Inches: ±0.010
   = Millimeters: ±0,25
2. Temperature rise of 40°C @ Irms
3. Tape & Reel Packaging, 1000 pieces per reel.
4. For non-RoHS parts replace DR prefix with 42- (e.g. DR356-3 becomes 42-356-3)
5. Terminal finish is compliant to RoHS requirements. Solder in accordance with J-STD-020C

DATATRONIC: 28151 Highway 74, Romoland, CA 92585 Tel: 951-928-7700 Toll Free Tel: 888-889-5391 Fax: 951-928-7701
Email: ddisales@datatronics.com
499 King's Road, Hong Kong Tel: (852) 2562 3858, (852) 2564 8477 Fax: (852) 2565 7214, (852) 2563 1290
All specifications are subject to change without notice.