# DIESEL GENERATOR SET
# DP180D6S

## 180 kWe / 60 Hz / Prime
## 208 - 600V

(Reference DS180D6S for Standby Rating Technical Data)

## SYSTEM RATINGS

| Prime | DP180D6SGA | DP180D6SDA | DP180D6SPA | DP180D6SJA | DP180D6SRA | DP180D6SNA |
|---|---|---|---|---|---|---|
| Voltage (L-L) | 240V** | 240V** | 208V** | 240V** | 480V** | 600V** |
| Phase | C/F | C/F | 3 | 3 | 3 | 3 |
| PF | C/F | C/F | 0.8 | 0.8 | 0.8 | 0.8 |
| Hz | C/F | C/F | 60 | 60 | 60 | 60 |
| kW | C/F | C/F | 180 | 180 | 180 | 180 |
| kVA | C/F | C/F | 225 | 225 | 225 | 225 |
| Amps | C/F | C/F | 625 | 541 | 271 | 217 |
| skVA@30% Voltage Dip | C/F | C/F | 454 | 454 | 577 | 510 |
| Generator Model | C/F | C/F | 431CSL6208 | 431CSL6208 | 431CSL6206 | 431PSL6243 |
| Temp Rise | C/F | C/F | 105 °C/40 °C | 105 °C/40 °C | 105 °C/40 °C | 105 °C/40 °C |
| Connection | C/F | C/F | 12 LEAD LOW WYE | 12 LEAD HI DELTA | 12 LEAD HI WYE | 4 LEAD WYE |

** UL 2200 Offered

## CERTIFICATIONS AND STANDARDS

// **Emissions –** EPA Tier 3 Certified

// **Generator set is designed and manufactured in facilities certified to standards ISO 9001:2008 and ISO 14001:2004**

// **Seismic Certification – Optional**
- IBC Certification
- OSHPD Pre-Approval

// **UL 2200 / CSA – Optional**
- UL 2200 Listed
- CSA Certified

// **Performance Assurance Certification (PAC)**
- Generator Set Tested to ISO 8528-5 for Transient Response
- Verified product design, quality and performance integrity
- All engine systems are prototype and factory tested

// **Power Rating**
- Accepts Rated Load in One Step Per NFPA 110

## STANDARD FEATURES*

// MTU Onsite Energy is a single source supplier
// Global Product Support
// 2 Year Standard Warranty
// 6068HFG85 Diesel Engine
- 6.8 Liter Displacement
- 4-Cycle
// Engine-generator resilient mounted
// Complete Range of Accessories
// Generator
- Brushless, Rotating Field Generator
- 2/3 Pitch Windings
- 300% Short Circuit Capability with Optional PMG
// Digital Control Panel(s)
- UL Recognized, CSA Certified, NFPA 110
- Complete System Metering
- LCD Display
// Cooling System
- Integral Set-Mounted
- Engine Driven Fan

## STANDARD EQUIPMENT*

### // Engine

Air Cleaners
Oil Pump
Oil Drain Extension & S/O Valve
Full Flow Oil Filter
Fuel Filter with Water Separator
Jacket Water Pump
Thermostat
Blower Fan & Fan Drive
Radiator - Unit Mounted
Electric Starting Motor - 12V
Governor – Electronic Isochronous
Base - Formed Steel
SAE Flywheel & Bell Housing
Charging Alternator - 12V
Battery Box & Cables
Flexible Fuel Connectors
Flexible Exhaust Connection
EPA Certified Engine

### // Generator

NEMA MG1, IEEE and ANSI standards compliance for temperature rise and motor starting
Self-Ventilated and Drip-Proof
Superior Voltage Waveform
Solid State, Volts-per-Hertz Regulator
±1% Voltage Regulation No Load to Full Load
Brushless Alternator with Brushless Pilot Exciter
4 Pole, Rotating Field
105 °C Maximum Prime Temperature Rise
1 Bearing, Sealed
Flexible Coupling
Full Amortisseur Windings
125% Rotor Balancing
3-Phase Voltage Sensing
100% of Rated Load - One Step
5% Maximum Total Harmonic Distortion

### // Digital Control Panel(s)

Digital Metering
Engine Parameters
Generator Protection Functions
Engine Protection
SAE J1939 Engine ECU Communications
Windows®-Based Software
Multilingual Capability
Remote Communications to RDP-110 Remote Annunciator
16 Programmable Contact Inputs
Up to 11 Contact Outputs
UL Recognized, CSA Certified, CE Approved
Event Recording
IP 54 Front Panel Rating with Integrated Gasket
NFPA 110 Compatible

* Represents standard product only. Consult Factory/MTU Onsite Energy Distributor for additional configurations.

# APPLICATION DATA

## // Engine

| | |
|---|---|
| Manufacturer | John Deere |
| Model | 6068HFG85 |
| Type | 4-Cycle |
| Arrangement | 6-Inline |
| Displacement: L (in$^3$) | 6.8 (415) |
| Bore: cm (in) | 10.6 (4.2) |
| Stroke: cm (in) | 12.7 (5) |
| Compression Ratio | 17:1 |
| Rated RPM | 1,800 |
| Engine Governor | JDEC |
| Maximum Power: kWm (bhp) | 214 (286) |
| Speed Regulation | ±0.25% |
| Air Cleaner | Dry |

## // Liquid Capacity (Lubrication)

| | |
|---|---|
| Total Oil System: L (gal) | 32.2 (8.5) |
| Engine Jacket Water Capacity: L (gal) | 11.9 (3.3) |
| System Coolant Capacity: L (gal) | 29.3 (7.75) |

## // Electrical

| | |
|---|---|
| Electric Volts DC | 12 |
| Cold Cranking Amps Under -17.8 °C (0 °F) | 925 |

## // Fuel System

| | |
|---|---|
| Fuel Supply Connection Size | 3/8” NPT |
| Fuel Return Connection Size | 3/8” NPT |
| Maximum Fuel Lift: m (ft) | 2 (6.7) |
| Recommended Fuel | Diesel #2 |
| Total Fuel Flow: L/hr (gal/hr) | 93 (24.5) |

## // Fuel Consumption

| | PRIME |
|---|---|
| At 100% of Power Rating: L/hr (gal/hr) | 51.9 (13.5) |
| At 75% of Power Rating: L/hr (gal/hr) | 40.5 (10.7) |
| At 50% of Power Rating: L/hr (gal/hr) | 27.6 (7.3) |

## // Cooling - Radiator System

| | PRIME |
|---|---|
| Ambient Capacity of Radiator: °C (°F) | 50 (122) |
| Maximum Restriction of Cooling Air, Intake, and Discharge Side of Rad.: kPa (in. $H_20$) | 0.12 (0.5) |
| Water Pump Capacity: L/min (gpm) | 265 (70) |
| Heat Rejection to Coolant: kW (BTUM) | 83.7 (4,766) |
| Heat Rejection to Air to Air: kW (BTUM) | 40 (2,298) |
| Heat Radiated to Ambient: kW (BTUM) | 25.5 (1,453) |
| Fan Power: kW (hp) | 8.6 (11.5) |

## // Air Requirements

| | PRIME |
|---|---|
| Aspirating: *m$^3$/min (SCFM) | 14.7 (520) |
| Air Flow Required for Rad. Cooled Unit: *m$^3$/min (SCFM) | 412 (14,537) |
| Remote Cooled Applications; Air Flow Required for Dissipation of Radiated Gen-set Heat for a Max of 25 °F Rise: *m$^3$/min (SCFM) | 93 (3,277) |

* Air density = 1.184 kg/m$^3$ (0.0739 lbm/ft$^3$)

## // Exhaust System

| | PRIME |
|---|---|
| Gas Temp. (Stack): °C (°F) | 528 (982) |
| Gas Volume at Stack Temp: m$^3$/min (CFM) | 38.8 (1,371) |
| Maximum Allowable Back Pressure: kPa (in. $H_20$) | 10 (40) |

## WEIGHTS AND DIMENSIONS

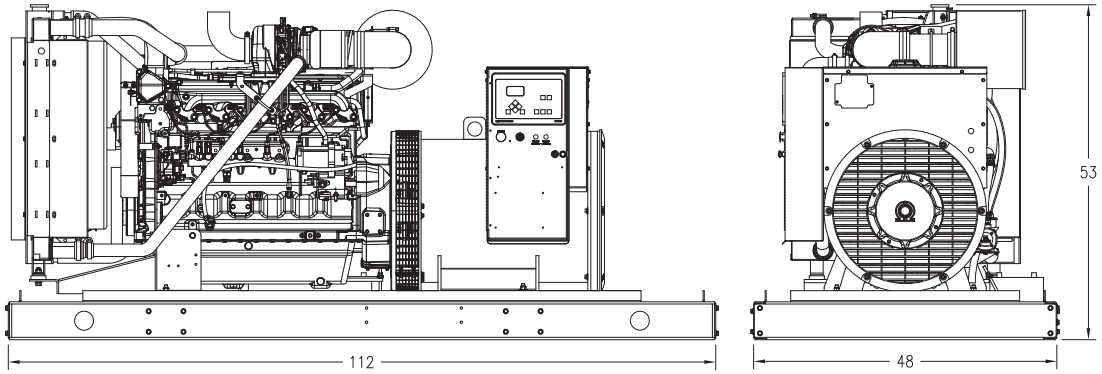


Drawing above for illustration purposes only, based on standard open power 480 volt generator set. Lengths may vary with other voltages. Do not use for installation design. See website for unit specific template drawings.

| System | Dimensions (L x W x H) | Weight (less tank) |
|---|---|---|
| OPU | 2,845 x 1,219 x 1,346 mm (112 x 48 x 53 in) | 1,751 kg (3,860 lb) |

Weights and dimensions are based on open power units and are estimates only. Consult the factory for accurate weights and dimensions for your specific generator set.

## SOUND DATA

| Unit Type | Prime Full Load |
|---|---|
| Level 0: Open Power Unit dB(A) | 87.2 |

Sound data is provided at 7 m (23 ft). Generator set tested in accordance with ISO 8528-10 and with infinite exhaust.

## EMISSIONS DATA

| $NO_x$ + NMHC | CO | PM |
|---|---|---|
| 2.8 | 0.4 | 0.04 |

**All units are in g/hp-hr and are EPA D2 cycle values.**
Emission levels of the engine may vary as a function of ambient temperature, barometric pressure, humidity, fuel type and quality, installation parameters, measuring instrumentation, etc. The data provided are laboratory results from one engine representing this rating. The data was obtained under controlled environmental conditions with calibrated instrumentation traceable to the United States National Bureau of Standards and in compliance with US EPA regulations found within 40 CFR Part 89. The weighted cycle value from each engine is guaranteed to be below the US EPA Standards at the US EPA defined conditions.

## RATING DEFINITIONS AND CONDITIONS

// Prime power ratings apply to installations where utility power is unavailable or unreliable. At varying load, the number of generator set operating hours is unlimited. A 10% overload capacity is available for one hour in twelve. Ratings are in accordance with ISO 8528-1, overload power in accordance with ISO 3046-1, BS 5514, AS 2789, and DIN 6271.

// Deration Factor:
**Altitude**: Consult your local MTU Onsite Energy Power Generation Distributor for altitude derations.
**Temperature**: Consult your local MTU Onsite Energy Power Generation Distributor for temperature derations.

© MTU Onsite Energy. Subject to alteration due to technological advances. OE 23 481 (77 3E) 2014-01

Materials and specifications subject to change without notice.
**C/F** = Consult Factory/MTU Onsite Energy Distributor