HIGH TEMPERATURE

SMT Power Inductors – DO3316T

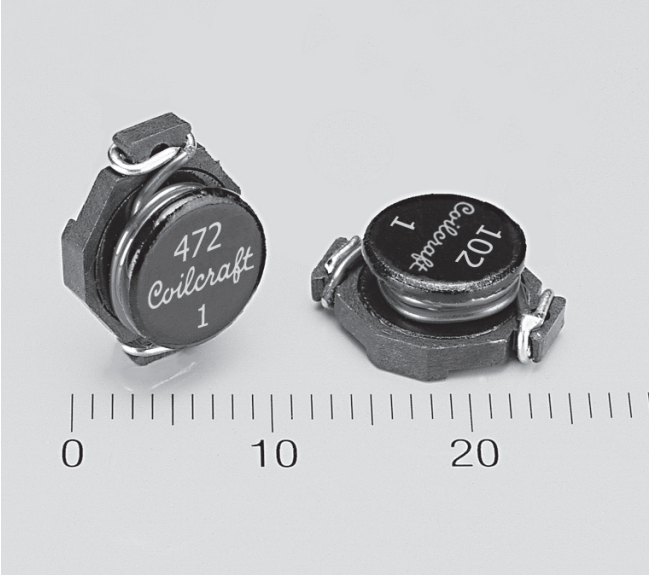

- Designed for high temperature applications – over 125°C ambient
- AEC-Q200 qualified; ideal for many automotive applications
- Soldered self-leaded construction for excellent solderability
- 10% tolerance for most values
- Low DCR and high current handling

Designer's Kit C396 contains 3 of each 20% value
Core material Ferrite
Core and winding loss See www.coilcraft.com/coreloss
Terminations RoHS compliant tin-silver-copper over copper. Other terminations available at additional cost.
Weight 0.95 – 1.25 g
Ambient temperature –40°C to +155°C. See derating curve for Irms vs Temperature.
Storage temperature Component: –40°C to +155°C. Tape and reel packaging: –40°C to +80°C
Resistance to soldering heat Max three 40 second reflows at +260°C, parts cooled to room temperature between cycles
Moisture Sensitivity Level (MSL) 1 (unlimited floor life at <30°C / 85% relative humidity)
Failures in Time (FIT) / Mean Time Between Failures (MTBF) 38 per billion hours / 26,315,789 hours, calculated per Telcordia SR-332
Packaging 750/13″ reel Plastic tape: 24 mm wide, 0.35 mm thick, 12 mm pocket spacing, 6.4 mm pocket depth
PCB washing Tested to MIL-STD-202 Method 215 plus an additional aqueous wash. See Doc787_PCB_Washing.pdf.

Part number[1]	L[2] (µH)	% tol[3]	DCR max (Ohms)	SRF[4] typ (MHz)	Isat[5] (A)	Irms[6] (A)
DO3316T-331ML_	0.33	**20**	0.002	200	20	16
DO3316T-681ML_	0.68	**20**	0.005	200	13	12
DO3316T-102ML_	1.0	**20**	0.006	100	11	10
DO3316T-152ML_	1.5	**20**	0.008	90	9.0	9.0
DO3316T-222_L_	2.2	**20**,10	0.011	90	7.8	7.4
DO3316T-272_L_	2.7	**20**,10	0.012	65	7.0	6.6
DO3316T-332_L_	3.3	**20**,10	0.014	60	6.4	5.9
DO3316T-392_L_	3.9	**20**,10	0.015	50	5.9	5.3
DO3316T-472_L_	4.7	**20**,10	0.018	50	5.4	4.8
DO3316T-562_L_	5.6	**20**,10	0.021	45	4.7	4.65
DO3316T-682_L_	6.8	**20**,10	0.024	43	4.4	4.40
DO3316T-822_L_	8.2	**20**,10	0.032	34	4.0	4.15
DO3316T-103_L_	10	**20**,10	0.034	31	3.9	3.90
DO3316T-123_L_	12	**20**,10	0.036	27	3.4	3.50
DO3316T-153_L_	15	**20**,10	0.045	25	3.1	3.10
DO3316T-183_L_	18	**20**,10	0.050	22	2.8	2.90
DO3316T-223_L_	22	**20**,10	0.070	18	2.5	2.70
DO3316T-273_L_	27	**20**,10	0.085	18	2.3	2.30
DO3316T-333_L_	33	**20**,10	0.100	17	2.0	2.10
DO3316T-393_L_	39	**20**,10	0.120	15	1.8	1.95
DO3316T-473_L_	47	**20**,10	0.150	14	1.65	1.80
DO3316T-563_L_	56	**20**,10	0.165	12	1.45	1.65
DO3316T-683_L_	68	**20**,10	0.220	11	1.40	1.50
DO3316T-823_L_	82	**20**,10	0.250	10	1.30	1.40
DO3316T-104_L_	100	**20**,10	0.280	9.0	1.20	1.30
DO3316T-124_L_	120	**20**,10	0.400	8.0	1.00	1.00
DO3316T-154_L_	150	**20**,10	0.460	6.0	0.90	0.90
DO3316T-184_L_	180	**20**,10	0.520	6.0	0.85	0.85
DO3316T-224_L_	220	**20**,10	0.700	5.0	0.80	0.80
DO3316T-274_L_	270	**20**,10	0.800	5.0	0.75	0.70
DO3316T-334_L_	330	**20**,10	1.07	4.5	0.60	0.60
DO3316T-394_L_	390	**20**,10	1.14	4.0	0.62	0.55
DO3316T-474_L_	470	**20**,10	1.27	3.5	0.50	0.50

1. When ordering, specify **tolerance**, **termination** and **packaging** codes:

DO3316T-474MLD

Tolerance: **M =** 20%, **K** = 10% (Table shows stock tolerances in bold.)
Termination: **L** = RoHS compliant tin-silver-copper over copper. Special order: **S** = non-RoHS tin-lead (63/37).
Packaging: **D** = 13″ machine-ready reel. EIA-481 embossed plastic tape (750 parts per full reel).
B = Less than full reel. In tape, but not machine ready. To have a leader and trailer added ($25 charge), use code letter C instead.

2. Inductance tested at 100 kHz, 0.1 Vrms, 0 Adc.
3. Tolerances in bold are stocked for immediate shipment.
4. SRF measured using Agilent/HP 8753D network analyzer.
5. DC current at which the inductance drops 10% (typ) from its value without current.
6. Current that causes a 40°C temperature rise from 25°C ambient.
7. Electrical specifications at 25°C.

Refer to Doc 362 "Soldering Surface Mount Components" before soldering.

Coilcraft
www.coilcraft.com

US +1-847-639-6400 sales@coilcraft.com
UK +44-1236-730595 sales@coilcraft-europe.com
Taiwan +886-2-2264 3646 sales@coilcraft.com.tw
China +86-21-6218 8074 sales@coilcraft.com.cn
Singapore + 65-6484 8412 sales@coilcraft.com.sg

© Coilcraft Inc. 2015
This product may not be used in medical or high risk applications without prior Coilcraft approval. Specification subject to change without notice. Please check web site for latest information.

HIGH TEMPERATURE

SMT Power Inductors – DO3316T Series

Typical L vs Current

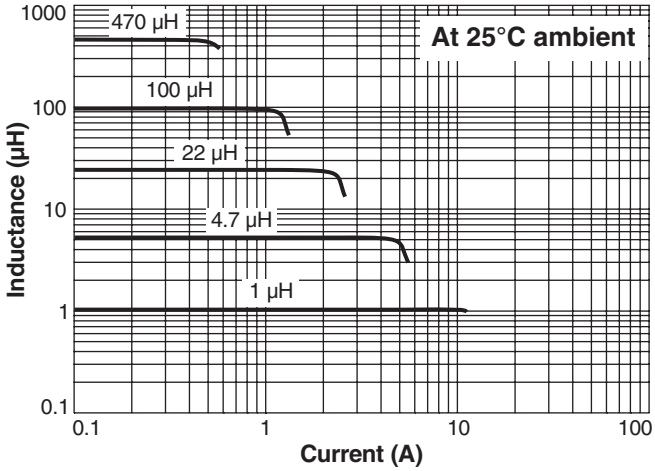

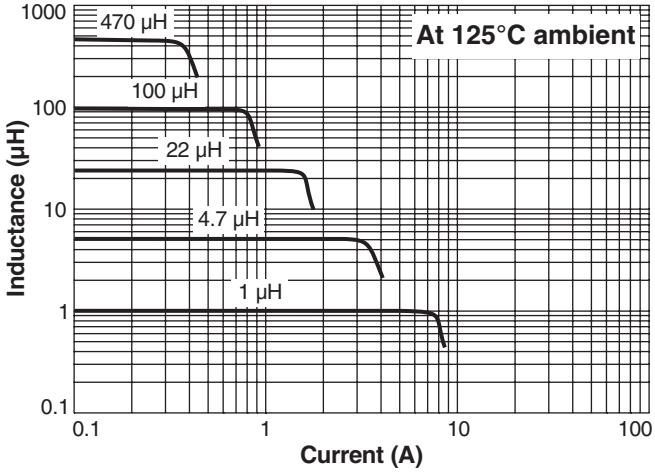

Typical L vs Frequency

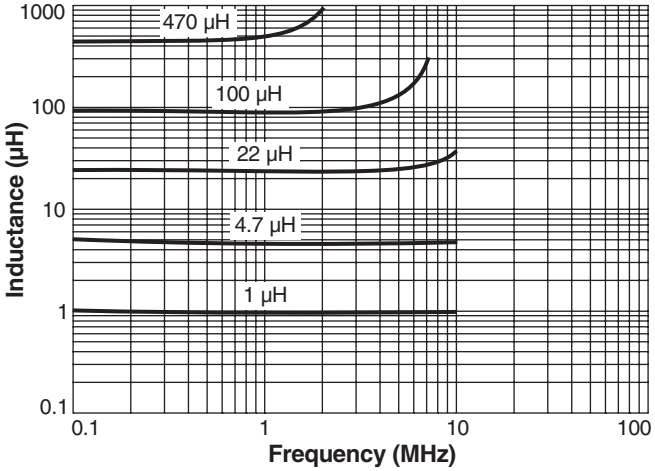

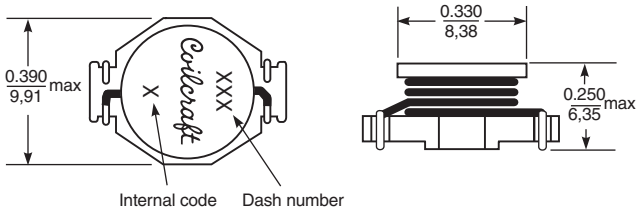

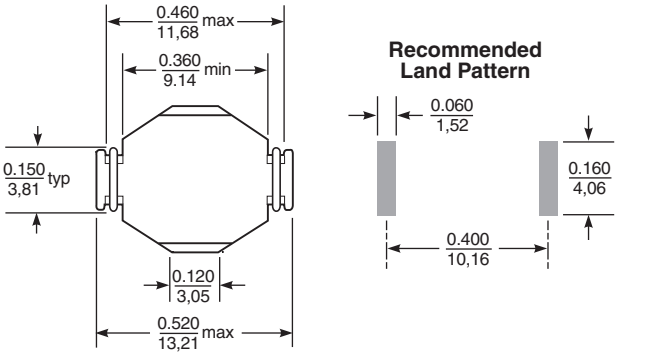

Dimensions are in inches / mm

Current Derating

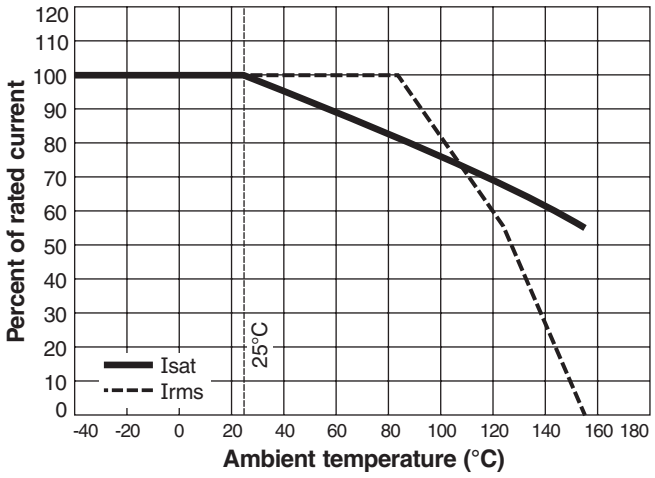

Coilcraft
www.coilcraft.com

US +1-847-639-6400 sales@coilcraft.com
UK +44-1236-730595 sales@coilcraft-europe.com
Taiwan +886-2-2264 3646 sales@coilcraft.com.tw
China +86-21-6218 8074 sales@coilcraft.com.cn
Singapore + 65-6484 8412 sales@coilcraft.com.sg

Document 365-2 Revised 09/25/12

© Coilcraft Inc. 2015
This product may not be used in medical or high risk applications without prior Coilcraft approval.
Specification subject to change without notice.
Please check web site for latest information.