Chassis Mount

MTT / DMTT Series

Machine Tool Transformers

Solutions for the Heavy Duty Machine Industry

Designed to meet the requirements of commercial and heavy duty machine applications. Concentrically constructed platform provides both double reinforced insulation and volumetric efficiency.



General Specifications

- Power - 300, 650, and 1000 VA ratings
- Dielectric Strength - 4000 Vrms Hipot
- MTT Primaries - tapped single, 100, 115, 120 V, 50/60 Hz
- DMTT Primaries - tapped dual configurations, 200, 220, 240, 400, 420, 440, 460, 480 V, 50/60 Hz
- Secondary - 120 V and 2 x 12 V
- Touch Safe Terminals (IP20 Type) offer a screw/binding clamp for hard wiring and 3/16” and 1/4” Fast-On connections
- Insulation System - UL recognized Class F, 155° C
- Leakage - <100 micro amps

Agency Certifications

- UL1446 File #E66312
- Compliant with the following domestic and international standards:
  - UL5085-1-2, UL 508, UL 60950, UL 197, UL 1262
  - IEC 60950, IEC 61558-2-4, IEC 61010-1
  - CSA 22.2 #66-1-2
  - VDE 0570, 0805, 0551, 0550 and CE

signal TRANSFORMER
a bel group

Part Number Selection

Part Number		Combined Output	Safety Low Voltage		Isolated Voltage
		VA max	Series	Parallel	
MTT-300	DMTT-300	300	24 VCT @ 12.5 A	12 V @ 25 A	120 V @ 2.5 A
MTT-650	DMTT-650	650	24 VCT @ 27 A	12 V @ 54 A	120 V @ 5.42 A
MTT-1000	DMTT-1000	1000	24 VCT @ 41.7 A	12 V @ 83.3 A	120 V @ 8.33 A

* DMTT-300 on primary Dim L = 5.26 (133.6), D = 5.38 (136.6)

Mechanical Specifications

Part Number		Mechanical Dimensions					
		L	W	H	ML	MW	Weight
		Inches (mm)					lbs (kg)
MTT-300	DMTT-300	4.12* (104.8)	5.04* (128.1)	3.86 (98.2)	3.62 (92.1)	3.5 (89.0)	9.82 (4.46)
MTT-650	DMTT-650	5.25 (133.3)	5.5 (139.7)	4.63 (117.8)	4.50 (114.3)	4.2 (106.8)	19.84 (9.01)
MTT-1000	DMTT-1000	7.06 (179.3)	5.1 (129.6)	6.1 (154.9)	5.5 (139.7)	3.69 (93.7)	33.5 (15.2)

* DMTT-300 on primary Dim L = 5.26 (133.6), D = 5.38 (136.6)

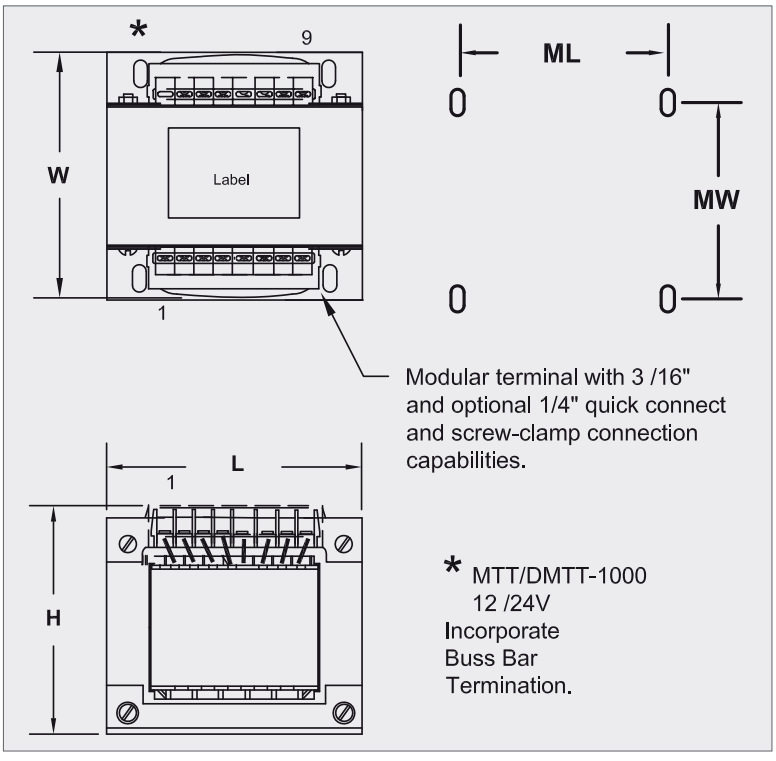

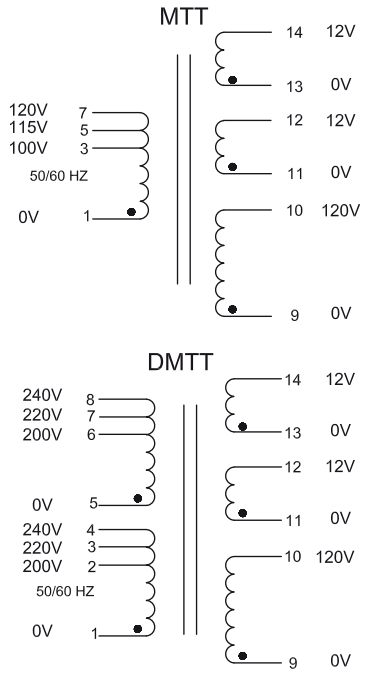

Custom versions available upon request.

128 Atlantic Avenue, Lynbrook, NY 11563
Toll Free 866-239-5777 | Tel 516-239-5777 | Fax 516-239-7208
sales@signaltransformer.com | techhelp@signaltransformer.com
belfuse.com/signal

© 2019 Signal Transformer