LCD Module Specification

First Edition	Approved by	Production Div.
June 3, 1998	Checked by	Quality Assurance Div.
Final Revision	Checked by	Design Engineering Div.
*******	Prepared by	Production Div.

Type No. DMC－50149NYU－LY－B

Table of Contents

1. General Specifications 2
2. Electrical Specifications.....3
3. Optical Specifications 7
4. I/O Terminal.....9
5. Test.....11
6. Appearance Standards.....12
7. Code System of Production Lot 15
8. Type Number 15
9. Applying Precautions.....15
10. Handling Precautions 16

Revision History

Rev.	Date	Page	Comment

1. General Specifications

Operating Temp.	:	min. 0℃ ～ max. 50℃
Storage Temp.	:	min. -20℃ ～ max. 70℃
Display Format	:	24 characters × 2 lines
Display Fonts	:	5 × 8 dots
Viewing Area	:	93.5 (W) × 15.8 (H) mm
Outline Dimensions	:	121.5 (W) × 33.5 (H) × 16.1 max. (D) mm
Weight	:	98g max.
LCD Type	:	NTD-7566 (STN / Yellow -mode / Transmissive)
Viewing Angle	:	12:00
Control LSI	:	T7934-0100(BR) (Produced by TOSHIBA)
Backlight	:	LED Backlight / Yellow-green
Additional Spec.	:	Holder and PWB ground are connected by soldering.
Drawings	:	Dimensional Outline UE-33623C

2. Electrical Specifications

2.1. Absolute Maximum Ratings

V_{SS}=0V

Parameter	Symbol	Conditions	Min.	Max.	Units
Supply Voltage (Logic)	V_{CC}-V_{SS}	—	-0.3	7.0	V
Supply Voltage (LCD Drive)	V_{CC}-V_{EE}	—	0	7.0	V
Input Voltage	V_I	—	-0.3	V_{CC}+0.3	V

2.2. DC Characteristics

Ta=25℃, V_{SS}=0V

Parameter	Symbol	Conditions	Min.	Typ.	Max.	Units
Supply Voltage (Logic)	V_{CC}-V_{SS}	—	4.5	—	5.5	V
Supply Voltage (LCD Drive)	V_{CC}-V_{EE}	Shown in 3.1				V
High Level Input Voltage	V_{IH}	V_{CC}=5.0V±10%	2.0	—	V_{CC}	V
Low Level Input Voltage	V_{IL}	V_{CC}=5.0V±10%	0	—	0.8	V
High Level Output Voltage	V_{OH}	I_{OH}=-1.2mA	2.4	—	V_{CC}	V
Low Level Output Voltage	V_{OL}	I_{OL}=2.0mA	0	—	0.4	V
Supply Current	I_{CC}	V_{CC}-V_{SS}=5.0V	—	1.3	2.0	mA

2.3.AC Characteristics

V_{CC}=5.0V±10%

Parameter	Symbol	Conditions	Min.	Max.	Units
Enable Cycle Time	t_{CYC}	Fig.1, 2	500	—	ns
Enable Pulse Width	PW_{EH}	Fig.1, 2	220	—	ns
Enable Rise/Fall Time	t_{Er}, t_{Ef}	Fig.1, 2	—	20	ns
Address Setup Time	t_{AS}	Fig.1, 2	40	—	ns
Address Hold Time	t_{AH}	Fig.1, 2	10	—	ns
Write Data Setup Time	t_{DSW}	Fig.1	60	—	ns
Write Data Hold Time	t_{DHW}	Fig.1	10	—	ns
Read Data Delay Time	t_{DDR}	Fig.2	—	120	ns
Read Data Hold Time	t_{DHR}	Fig.2	20	—	ns

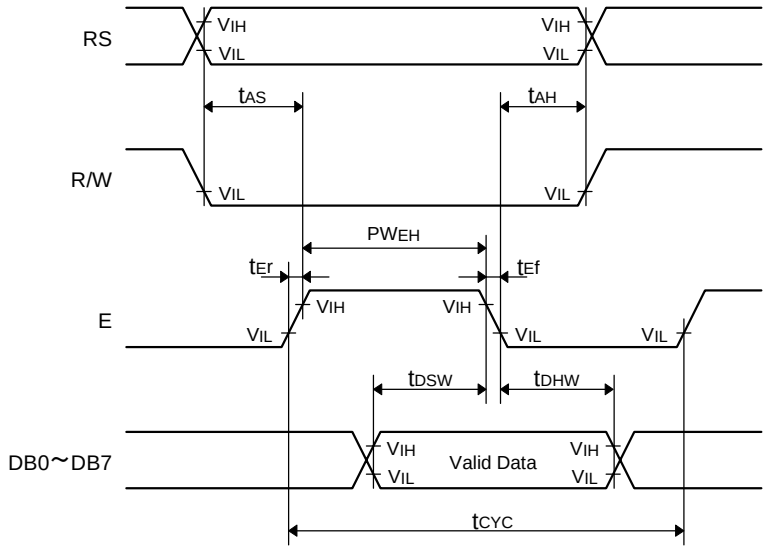

Fig.1 Write Operation Timing

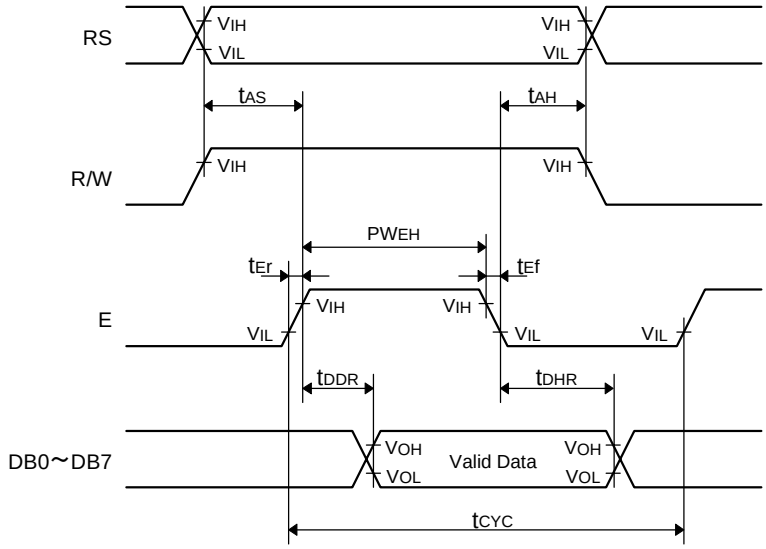

Fig.2 Read Operation Timing

2.4.Power Supply ON/OFF Sequence

2.4.1.ON Sequence

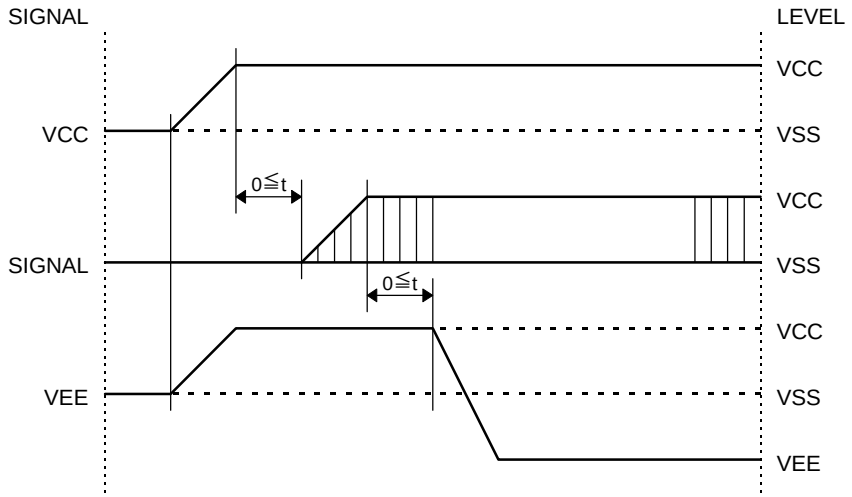

2.4.2.OFF Sequence

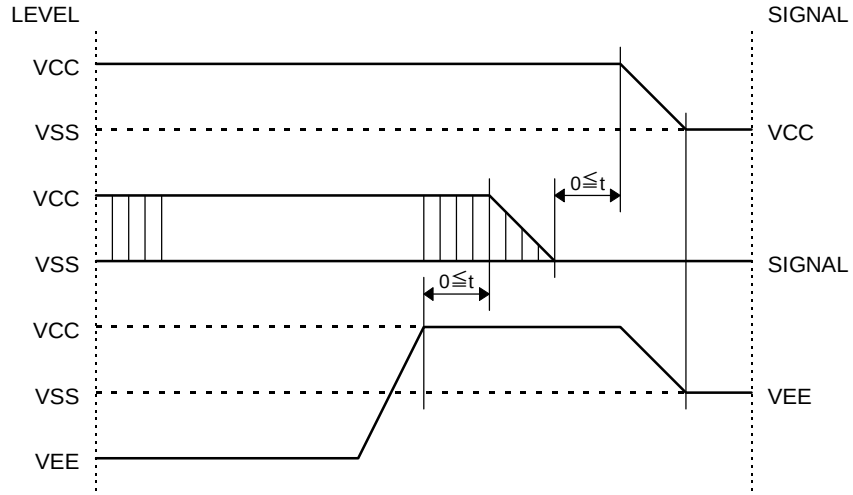

Please maintain the above sequence when turning on and off the power supply of the module.
If V_{EE} is supplied to the module while internal alternate signal for LCD driving (M) is unstable, DC component will be supplied to the LCD panel. This may cause damage the LCD module.

2.5.Lighting Specifications

2.5.1.Absolute Maximum Ratings

Ta=25℃

Parameter	Symbol	Conditions	Min.	Typ.	Max.	Units
Reverse Voltage	V_R	Note 1	–	–	8.0	V
LED Power Dissipation	P_D	–	–	–	700	mW

Note 1 : V_F is defined as the voltage between ANODE and CATHODE as shown below.

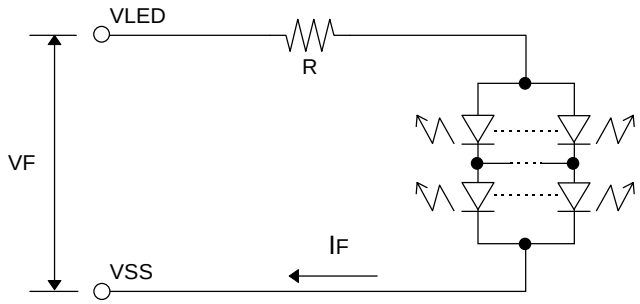

2.5.2.Operating Characteristics

Ta=25℃

Parameter	Symbol	Conditions	Min.	Typ.	Max.	Units
Foward Current	I_F	V_F=5.0V	50	80	100	mA
Luminance of Backlight Surface	L	V_F=5.0V	35	–	–	cd/㎡

3. Optical Specifications

3.1.LCD Driving Voltage

Parameter	Symbol	Conditions	Min.	Typ.	Max.	Units
Recommended	V_{CC}-V_{EE}	Ta= 0℃	–	–	5.3	V
LCD Driving Voltage		Ta=25℃	4.4	4.7	5.1	V
Note 1		Ta=50℃	4.2	–	–	V

Note 1 : Voltage (Applied actual waveform to LCD Module) for the best contrast. The range of minimum and maximum shows tolerance of the operating voltage. The specified contrast ratio and response time are not guaranteed over the entire range.

3.2.Optical Characteristics

Ta=25℃, 1/16 Duty, 1/4.5 Bias, V_D=4.7V (Note 4), $\theta = 0^\circ$, $\phi = -^\circ$

Parameter		Symbol	Conditions	Min.	Typ.	Max.	Units
Contrast Ratio Note 1		CR	$\theta = 0^\circ$, $\phi = -^\circ$	–	10	–	
Viewing Angle			Shown in 3.3				
Response	Rise Note 2	T_{ON}	–	–	100	200	ms
Time	Decay Note 3	T_{OFF}	–	–	200	300	ms

Note 1 : Contrast ratio is defined as follows.

$CR = L_{OFF} / L_{ON}$

L_{ON} : Luminance of the ON segments

L_{OFF} : Luminance of the OFF segments

Note 2 : The time that the luminance level reaches 90% of the saturation level from 0% when ON signal is applied.

Note 3 : The time that the luminance level reaches 10% of the saturation level from 100% when OFF signal is applied.

Note 4 : Definition of Driving Voltage V_D

Assuming that the typical driving waveforms shown below are applied to the LCD Panel at 1/A Duty - 1/B Bias (A : Duty Number, B : Bias Number). Driving voltage V_D is defined as follows.

$V_D = (Vth1+Vth2) / 2$

Vth1 : The voltage V_{O-P} that should provide 50% of the satulation level in the luminance at the segment which the ON signal is applied to.

Vth2 : The voltage V_{O-P} that should provide 50% of the satulation level in the luminance at the segment which the OFF signal is applied to.

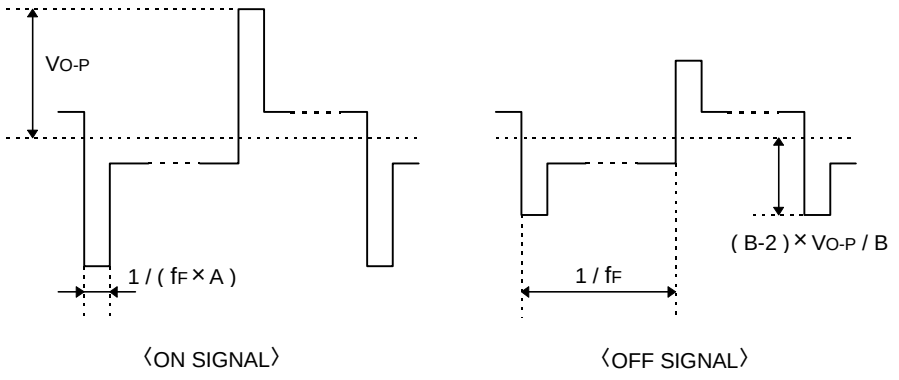

3.3.Definition of Viewing Angle and Optimum Viewing Area

・Point ● shows the point where contrast ratio is measured. : $\theta = 0^\circ$, $\phi = -^\circ$

・Driving condition :1/16 Duty, 1/4.5 Bias, V_D=4.7V, f_F=70Hz

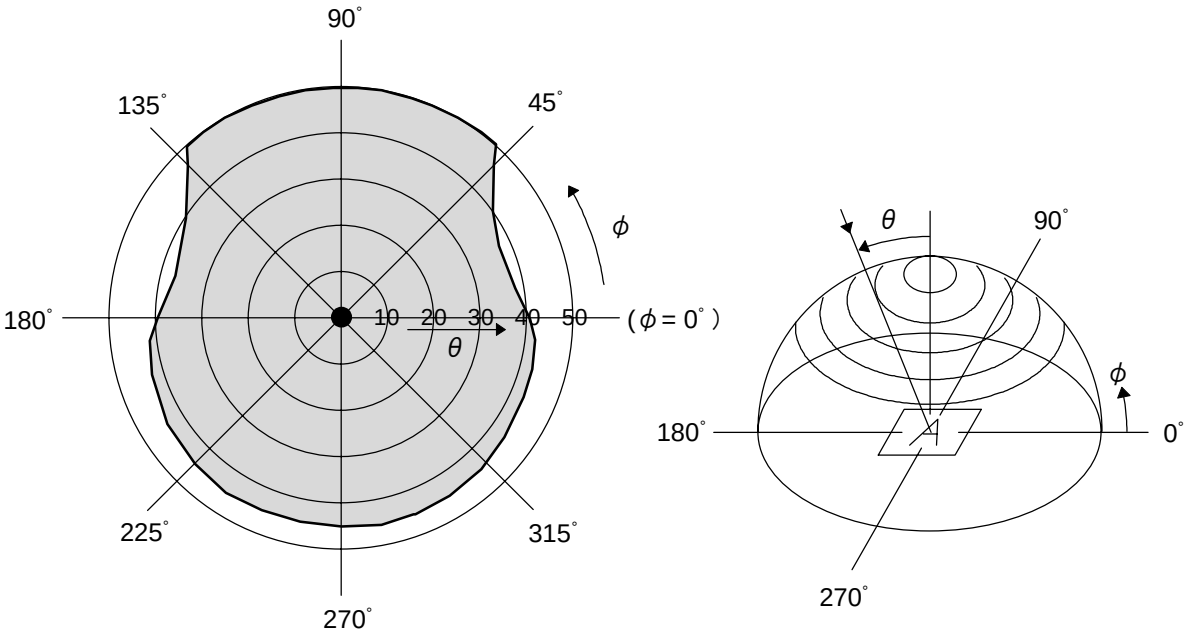

・Area ▭ shows typ. CR≧2

3.4.System Block Diagram

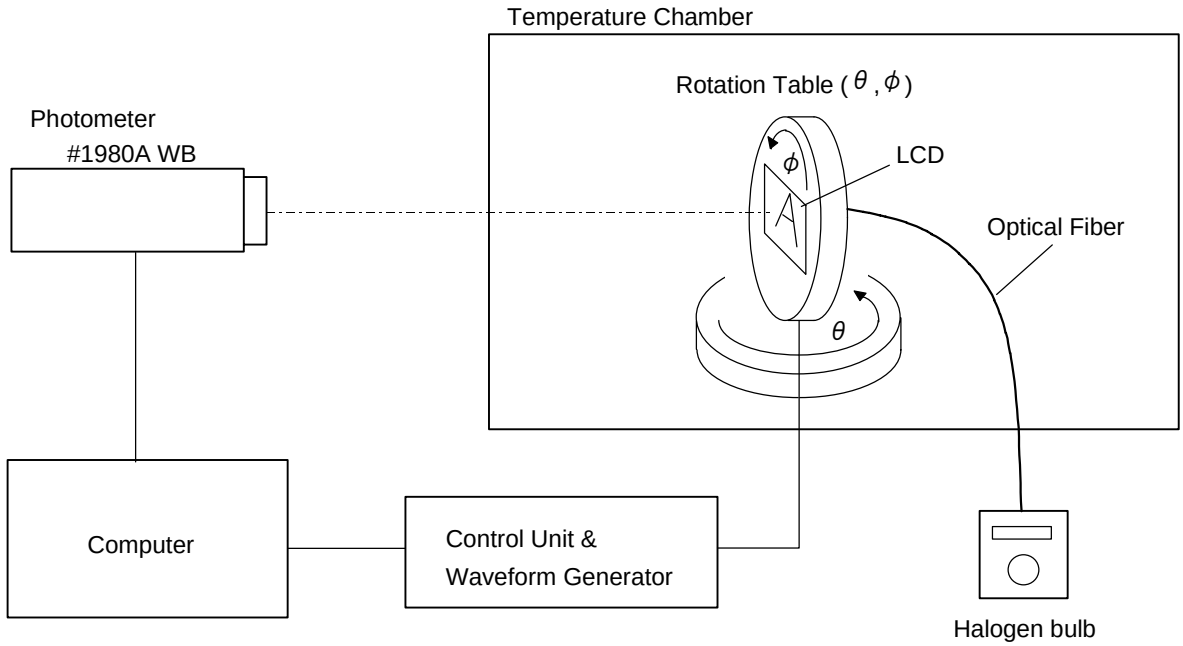

4.I/O Terminal

4.1.Pin Assignment

CN1

No.	Symbol	Level	Function
1	V_{SS}	—	Power Supply (0V)
2	V_{CC}	—	Power Supply for Logic
3	V_{EE}	—	Power Supply for LCD Drive
4	RS	H / L	Register Select Signal
5	R/W	H / L	Read/Write Select Signal H : Read L : Write
6	E	H / L	Enable Signal (No pull-up Resister)
7	DB0	H / L	Data Bus Line / Non-connection at 4-bit operation
8	DB1	H / L	Data Bus Line / Non-connection at 4-bit operation
9	DB2	H / L	Data Bus Line / Non-connection at 4-bit operation
10	DB3	H / L	Data Bus Line / Non-connection at 4-bit operation
11	DB4	H / L	Data Bus Line
12	DB5	H / L	Data Bus Line
13	DB6	H / L	Data Bus Line
14	DB7	H / L	Data Bus Line
15	VLED	—	Power Supply for LED

4.2.Example of Power Supply

It is recommended to apply a potentiometer for the contrast adjust due to the tolerance of the driving voltage and its temperature dependence.

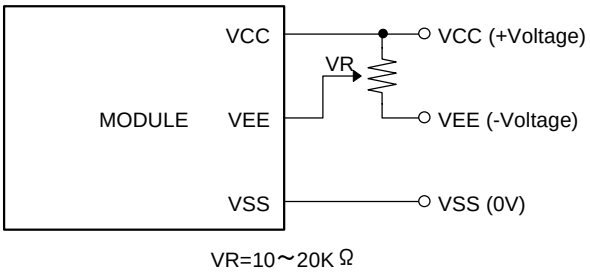

VR=10～20KΩ

4.3.Block Diagram

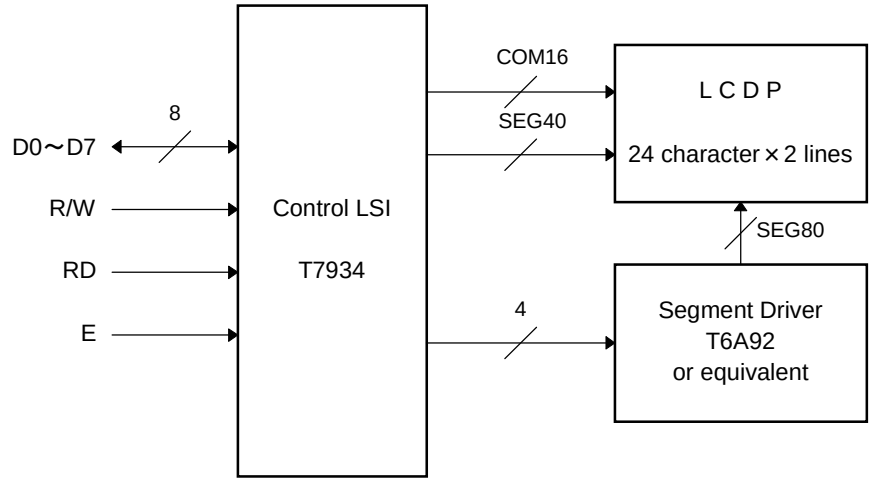

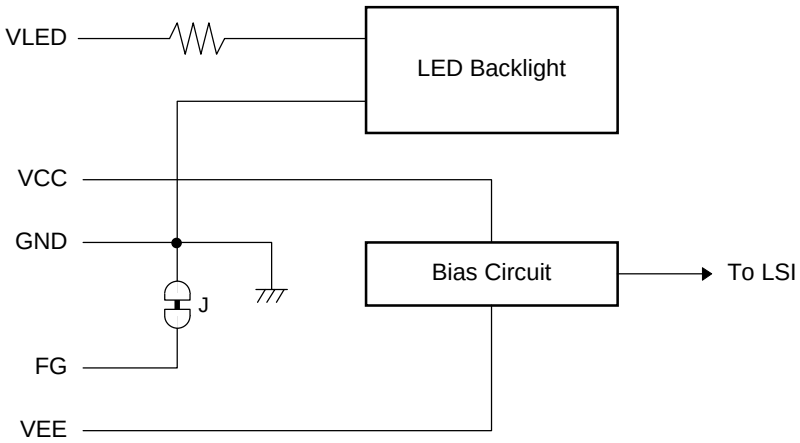

5. Test

No change on display and in operation under the following test condition.

No.	Parameter	Conditions	Notes
1	High Temperature Operating	50℃±2℃, 96hrs (operation state)	
2	Low Temperature Operating	0℃±2℃, 96hrs (operation state)	3
3	High Temperature Storage	70℃±2℃, 96hrs	4
4	Low Temperature Storage	-20℃±2℃, 96hrs	3, 4
5	Damp Proof Test	40℃±2℃, 90～95%RH, 96hrs	3, 4
6	Vibration Test	Total fixed amplitude : 1.5mm Vibration Frequency : 10～55Hz One cycle 60 seconds to 3 directions of X, Y, Z for each 15 minutes	5
7	Shock Test	To be measured after dropping from 60cm high on the concrete surface in packing state. 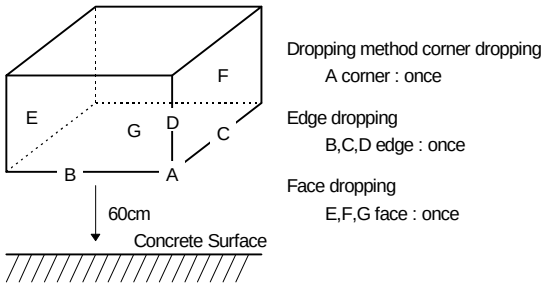	

Note 1 : Unless otherwise specified, tests will be conducted under the following condition.
Temperature : 20±5℃
Humidity : 65±5%

Note 2 : Unless otherwise specified, tests will be not conducted under functioning state.

Note 3 : No dew condensation to be observed.

Note 4 : The function test shall be conducted after 4 hours storage at the normal temperature and humidity after removed from the test chamber.

Note 5 : Vibration test will be conducted to the product itself without putting it in a container.

6. Appearance Standards

6.1. Inspection conditions

The LCD shall be inspected under 40W white fluorescent light.
The distance between the eyes and the sample shall be more than 30cm.
All directions for inspecting the sample should be within 45° against perpendicular line.

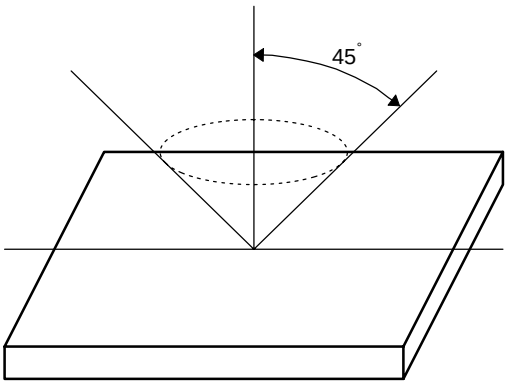

6.2. Definition of applicable Zones

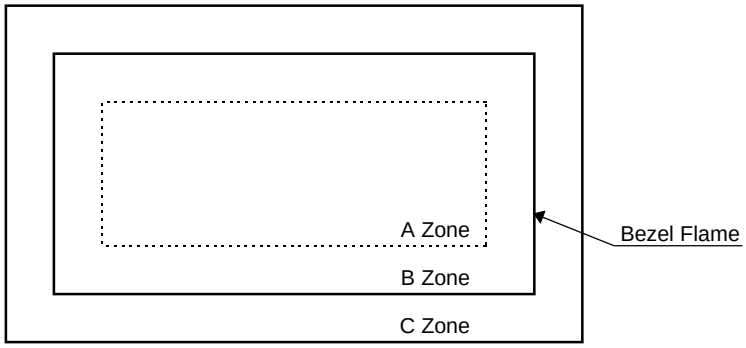

A Zone : Active display area
B Zone : Area from outside of "A Zone" to validity viewing area
C Zone : Rest parts

A Zone + B Zone = Validity viewing area

6.3.Standards

<table>
<tr><th>No.</th><th>Parameter</th><th>Criteria</th></tr>
<tr><td>1</td><td>Black and White Spots, Foreign Substances</td><td>(1) Round Shape
<table>
<tr><th rowspan="2">Zone / Dimension (mm)</th><th colspan="3">Acceptable Number</th></tr>
<tr><th>A</th><th>B</th><th>C</th></tr>
<tr><td>D ≦ 0.1</td><td>*</td><td>*</td><td>*</td></tr>
<tr><td>0.1 ＜ D ≦ 0.2</td><td>5</td><td>5</td><td>*</td></tr>
<tr><td>0.2 ＜ D ≦ 0.3</td><td>0</td><td>1</td><td>*</td></tr>
<tr><td>0.3 ＜ D</td><td>0</td><td>0</td><td>*</td></tr>
</table>
D = (Long + Short) / 2 * : Disregard
(2) Line Shape
<table>
<tr><th rowspan="2">X(mm) / Zone / Y(mm)</th><th colspan="3">Acceptable Number</th></tr>
<tr><th>A</th><th>B</th><th>C</th></tr>
<tr><td>—</td><td>0.02≧W</td><td>*</td><td>*</td><td>*</td></tr>
<tr><td>2.0≧L</td><td>0.03≧W</td><td>3</td><td>3</td><td>*</td></tr>
<tr><td>1.0≧L</td><td>0.04≧W</td><td>1</td><td>2</td><td>*</td></tr>
<tr><td>1.0≧L</td><td>0.05≧W</td><td>0</td><td>2</td><td>*</td></tr>
<tr><td>—</td><td>0.05＜W</td><td colspan="3">In the same way (1)</td></tr>
</table>
X : Length Y : Width * : Disregard
Total defects shall not exceed 5.</td></tr>
<tr><td>2</td><td>Air Bubbles (between glass & polarizer)</td><td>
<table>
<tr><th rowspan="2">Zone / Dimension (mm)</th><th colspan="3">Acceptable Number</th></tr>
<tr><th>A</th><th>B</th><th>C</th></tr>
<tr><td>D ≦0.15</td><td>*</td><td>*</td><td>*</td></tr>
<tr><td>0.15＜ D ≦0.3</td><td>2</td><td>3</td><td>*</td></tr>
<tr><td>0.3 ＜ D ≦0.5</td><td>1</td><td>2</td><td>*</td></tr>
<tr><td>0.5 ＜ D ≦1.0</td><td>0</td><td>1</td><td>*</td></tr>
</table>
* : Disregard
Total defects shall not exceed 3.</td></tr>
</table>

No.	Parameter	Criteria
3	The Shape of Dot	(1) Dot Shape (with Dent) 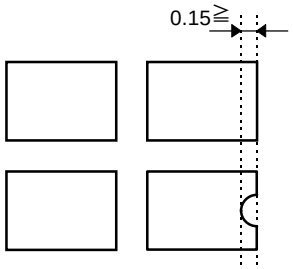 As per the sketch of left hand. (2) Dot Shape (with Projection) 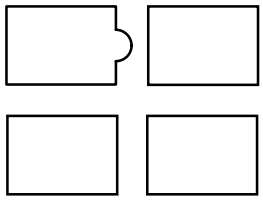 Should not be connected to next dot. (3) Pin Hole 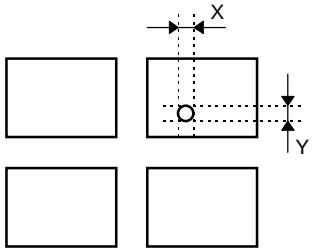 (X+Y) / 2≦0.2mm (Less than 0.1mm is no counted.) Total defects shall not exceed 5.
4	Polarizer Scratches	Not to be conspicuous defects.
5	Polarizer Dirts	If the stains are removed easily from LCDP surface, the module is not defective.
6	Color Variation	Not to be conspicuous defects.

7. Code System of Production Lot

The production lot of module is specified as follows.

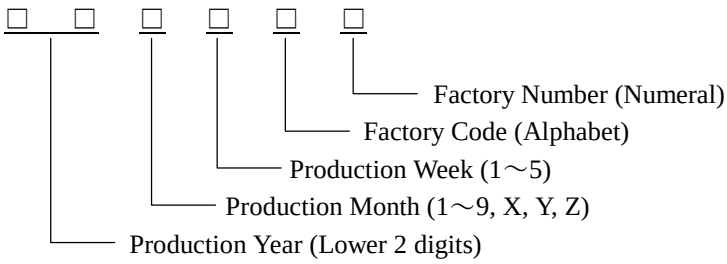

8. Type Number

The type number of module is specified on the back of module as follows.

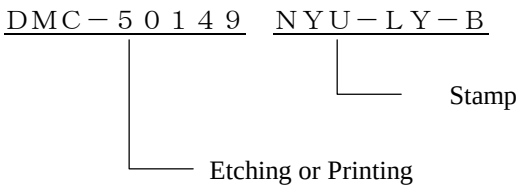

9. Applying Precautions

Please contact us when questions and/or new problems not specified in this specifications arise.

10. Handling Precautions

Optrex Products are designed for use in ordinary electronic devices such as business machines, telecommunications equipment, measurement devices and etc..
Optrex Products are not designed, intended, or authorized for use in any application in which the failure of the product could result in a situation where personal injury or death may occur. These applications include, but are not limited to, life-sustaining equipment, nuclear control devices, aerospace equipment, devices related to hazardous or flammable materials, etc. (If Buyer intends to purchase or use the Optrex Products for such unintended or unauthorized applications, Buyer must secure prior written consent to such use by a responsible officer of Optrex Corporation.) Should Buyer purchase or use Optrex Products for any such unintended or unauthorized application (without such consent), Buyer shall indemnify and hold Optrex and its officers, employees, subsidiaries, affiliates and distributors harmless against all claims, costs, damages and expenses, and reasonable attorney's fees, arising out of, directly or indirectly, any claim of personal injury or death associated with such unintended or unauthorized use, even if such claim alleges that Optrex was negligent regarding the design or manufacture of the part.

1) LCD may be broken because it is made of glass.

2) Polarizer is a soft material and can easily be scratched.

3) Please avoid static electricity.

   ① Please be sure to ground human body and electric appliances during work.
   ② It is preferable to use conductive mat on table and wear cotton clothes or conduction processed fiber. Synthetic fiber is not recommended.
   ③ Please slowly peel off protective film, because static electricity may be charged.

4) If it is necessary to store LCD modules for a long time, please comply with the following procedures. If storage condition is not satisfactory, display (especially polarizer) may be deteriorated or soldering I/O terminals may become difficult (some oxide is generated at I/O terminals plating).

   ① Store as delivered by Optrex
   ② If you store as unpacked, put in anti-static bag, seal its opening and store where it is not subjected to direct sunshine nor fluorescent lamp.
   ③ Store at temperature 0 to +35℃ and at low humidity. Please refer to our specification sheets for storage temperature range and humidity condition.

5) The module does not contain excess current limiter.
   Please design the limiter to cut excess current in your power supply circuit.

6) Liquid crystal may be leaked when display is broken. Never taste it. If your hands or clothes touch it, please immediately wash using soap.

Optrex shall not be responsible for any infringement of industrial property rights of third parties in any country arising out of the application or use of Optrex Products, except which directly concern the structure or production of such products.