National Semiconductor

June 1989

9601/DM9601 Retriggerable One Shot

General Description

These retriggerable one shots provide the designer with four inputs; two active high and two active low. This permits a choice of either leading-edge or trailing-edge triggering, independent of input transition times. When input conditons for triggering are met, a new cycle starts and the external capacitor is rapidly discharged and then allowed to charge again. The retriggerable feature allows for output pulse widths to be expanded. In fact a continuous true output can be maintained by having an input cycle time which is shorter than the output cycle time. Retriggering may be inhibited by tying the $\overline{Q}$ output to an active low input.

Features

- High speed operation—input repetition rate > 10 MHz
- Flexibility of operation—optional retriggering/lock-out capability
- Output pulse width range—50 ns to ∞
- Leading or trailing edge triggering
- Complementary outputs/inputs
- Input clamping diodes
- DTL/TTL compatible logic levels
- Alternate Military/Aerospace device (9601) is available. Contact a National Semiconductor Sales Office/Distributor for specifications.

Connection Diagram

Dual-In-Line Package

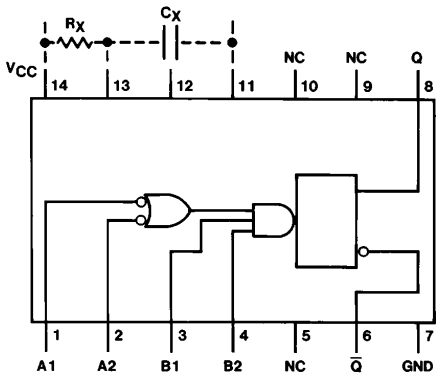

TL/F/6610–1

Order Number 9601DMQB, 9601FMQB, DM9601J, DM9601W or DM9601N
See NS Package Number J14A, N14A or W14B

Function Table

Inputs				Outputs	
A1	A2	B1	B2	Q	$\overline{Q}$
H	H	X	X	L	H
X	X	L	X	L	H
X	X	X	L	L	H
L	X	H	H	L	H
L	X	↑	H	⎍	⎏
L	X	H	↑	⎍	⎏
X	L	H	H	L	H
X	L	↑	H	⎍	⎏
X	L	H	↑	⎍	⎏
H	↓	H	H	⎍	⎏
↓	↓	H	H	⎍	⎏
↓	H	H	H	⎍	⎏

H = High Logic Level
L = Low Logic Level
X = Either Low or High Logic Level
↑ = Low to High Level Transition
↓ = High to Low Level Transition
⎍ = Positive Pulse
⎏ = Negative Pulse

©1995 National Semiconductor Corporation

RRD-B30M105/Printed in U. S. A.

Absolute Maximum Ratings (Note)

If Military/Aerospace specified devices are required, please contact the National Semiconductor Sales Office/Distributors for availability and specifications.

Supply Voltage	7V
Input Voltage	5.5V
Operating Free Air Temperature Range	
Military	−55°C to +125°C
Commercial	0° to +70°C
Storage Temperature Range	−65°C to +150°C

Note: *The "Absolute Maximum Ratings" are those values beyond which the safety of the device cannot be guaranteed. The device should not be operated at these limits. The parametric values defined in the "Electrical Characteristics" table are not guaranteed at the absolute maximum ratings. The "Recommended Operating Conditions" table will define the conditions for actual device operation.*

Recommended Operating Conditions

Symbol	Parameter		Military			Commercial			Units
			Min	Nom	Max	Min	Nom	Max	
V_{CC}	Supply Voltage		4.5	5	5.5	4.75	5	5.25	V
V_{IH}	High Level Input Voltage	$T_A = -55°C$	2						V
		$T_A = 0°C$				1.9			
		$T_A = 25°C$	1.7			1.8			
		$T_A = 75°C$				1.6			
		$T_A = 125°C$	1.5						
V_{IL}	Low Level Input Voltage	$T_A = -55°C$			0.85				V
		$T_A = 0°C$						0.85	
		$T_A = 25°C$			0.9			0.85	
		$T_A = 75°C$						0.85	
		$T_A = 125°C$			0.85				
I_{OH}	High Level Output Current				−0.72			−0.96	mA
I_{OL}	Low Level Output Current				10			12.8	mA
T_A	Free Air Operating Temperature		−55		125	0		75	°C

Electrical Characteristics over recommended operating free air temperature range (unless otherwise noted)

Symbol	Parameter	Conditions (Note 3)		Min	Typ (Note 1)	Max	Units
V_I	Input Clamp Voltage	V_{CC} = Min, I_I = −12 mA				−1.5	V
V_{OH}	High Level Output Voltage	V_{CC} = Min, I_{OH} = Max V_{IL} = Max, V_{IH} = Min, (Note 4)		2.4			V
V_{OL}	Low Level Output Voltage	V_{CC} = Min, I_{OL} = Max V_{IL} = Max, V_{IH} = Min (Note 4)	MIL			0.4	V
			COM			0.45	
I_{IH}	High Level Input Current	V_{CC} = Max, V_I = 4.5V				60	μA
I_{IL}	Low Level Input Current	V_{CC} = Max	MIL V_{IN} = 0.40V			−1.6	mA
			COM V_{IN} = 0.45V			−1.6	
I_{OS}	Short Circuit Output Current	V_{CC} = Max (Notes 2 and 4)	MIL	−10		−40	mA
			COM	−10		−40	
I_{CC}	Supply Current	V_{CC} = Max				25	mA

Note 1: All typicals are at V_{CC} = 5V, T_A = 25°C.

Note 2: Not more than one output should be shorted at a time.

Note 3: Unless otherwise noted, R_X = 10k between PIN 13 and V_{CC} on all tests.

Note 4: Ground PIN 11 for V_{OL} test on PIN 6, V_{OH} and I_{OS} tests on PIN 8. Open PIN 11 for V_{OL} test on PIN 8, V_{OH} and I_{OS} tests on PIN 6.

Switching Characteristics at $V_{CC} = 5V$ and $T_A = 25°C$ (See Section 1 for Test Waveforms and Output Load)

Symbol	Parameter	From (Input) To (Output)	Conditions	Min	Max	Units
t_{PLH}	Propagation Delay Time Low to High Level Output	Negative Trigger Input to True Output	$C_L = 15$ pF, $C_X = 0$, $R_X = 5$ kΩ		40	ns
t_{PHL}	Propagation Delay Time High to Low Level Output	Negative Trigger Input to Complement Output			40	ns
$t_{PW(MIN)}$	Minimum True Output Pulse Width				65	ns
t_{PW}	Pulse Width		$R_X = 10$ kΩ, $C_X = 1000$ pF	3.08	3.76	μs
C_{STRAY}	Maximum Allowable Wiring Capacitance		Pin 13 to GND		50	pF
R_X	External Timing Resistor		DM96		25	kΩ
R_X	External Timing Resistor		DM86		50	kΩ

Operating Rules

1. An external resistor R_X and an external capacitor C_X are required for operation. The value of R_X can vary between the limits shown in switching characteristics. The value of C_X is optional and may be adjusted to achieve the required output pulse width.
2. Output pulse width t_{PW} may be calculated as follows:

   $$t_{PW} = K\, R_X C_X \left[1 + \frac{0.7}{R_X}\right] \text{ (for } C_X > 10^3 \text{ pF)}$$

   $K \approx 0.34$

   R_X in kΩ, C_X in pF and t_{PW} in ns.

   (For $C_X < 10^3$ pF, see curve.)
3. R_X and C_X must be kept as close as possible to the circuit in order to minimize stray capacitance and noise pickup. If remote trimming is required, R_X may be split up such that at least $R_{X(MIN)}$ must be as close as possible to the circuit and the remote portion of the trimming resistor $R < R_{X(MAX)} - R_X$.
4. Set-up time (t_1) for input trigger pulse must be > 40 ns. (See *Figure 1*).

   Release time (t_2) for input trigger pulse must be > 40 ns. (See *Figure 2*).

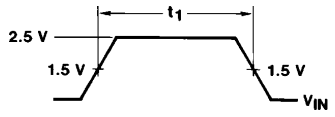

TL/F/6610–2

FIGURE 1

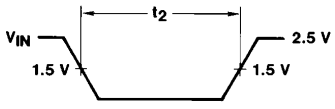

TL/F/6610–3

FIGURE 2

5. Retrigger pulse width (see *Figure 3*) is calculated as follows:

   $$t_W = t_{PW} + t_{PLH} = K\, R_X C_X \left[1 + \frac{0.7}{R_X}\right] + t_{PLH}$$

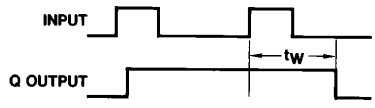

TL/F/6610–4

FIGURE 3

Typical "K" Coefficient Variation vs Timing Capacitance

The multiplicative factor "K" varies as a function of the timing capacitor, C_X. The graph below details this characteristic:

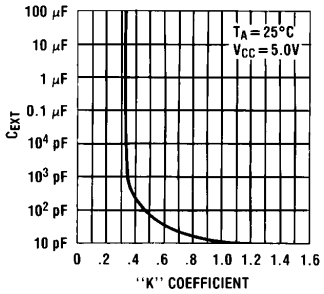

TL/F/6610–5

*For further detailed device characteristics and output performance, please refer to the NSC one-shot application note, AN-366.

Typical Performance Characteristics

Output Pulse Width vs Timing Resistance And Capacitance For $C_X < 10^3$ pF

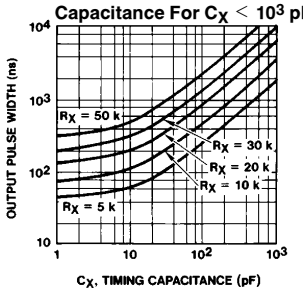

Normalized Output Pulse Width vs Ambient Temperature

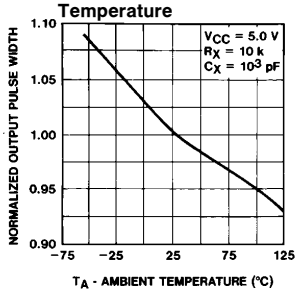

Normalized Output Pulse Width vs Supply Voltage

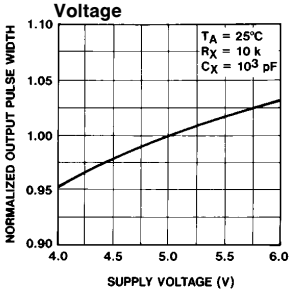

Normalized Output Pulse Width vs Operating Duty Cycle

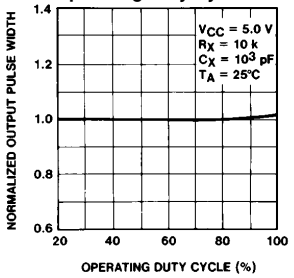

Pulse Width vs Timing Resistance

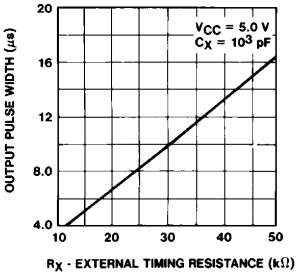

Output Pulse Width vs Ambient Temperature

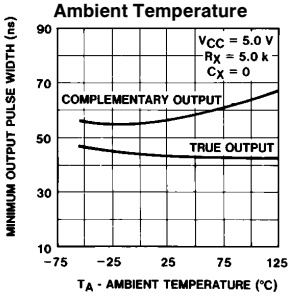

TL/F/6610–6

Schematic Diagram

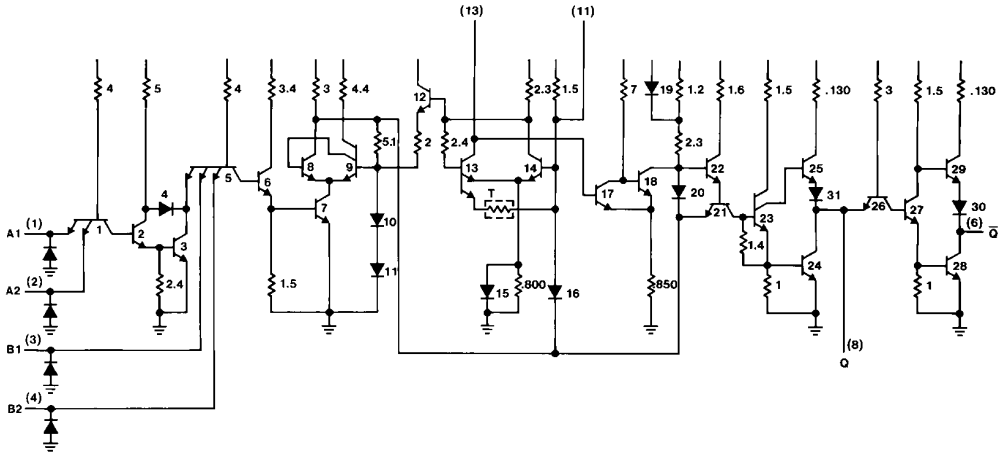

TL/F/6610–7

Physical Dimensions inches (millimeters)

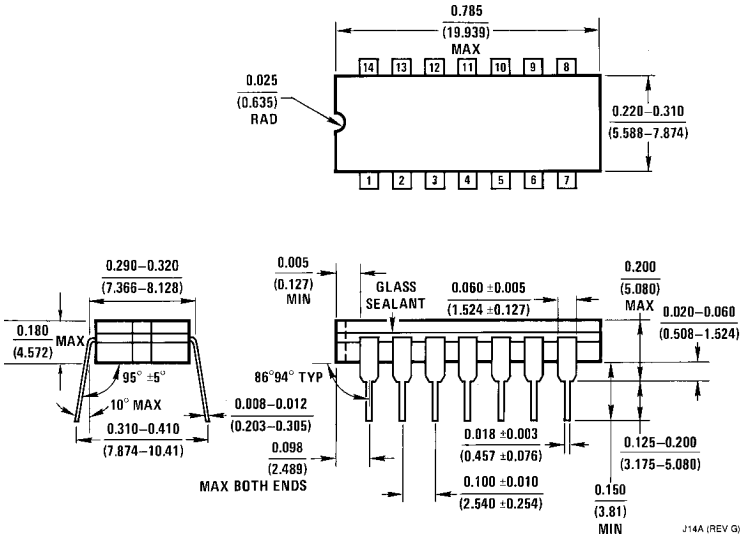

14-Lead Ceramic Dual-In-Line Package (J)
Order Number 9601DMQB or DM9601J
NS Package Number J14A

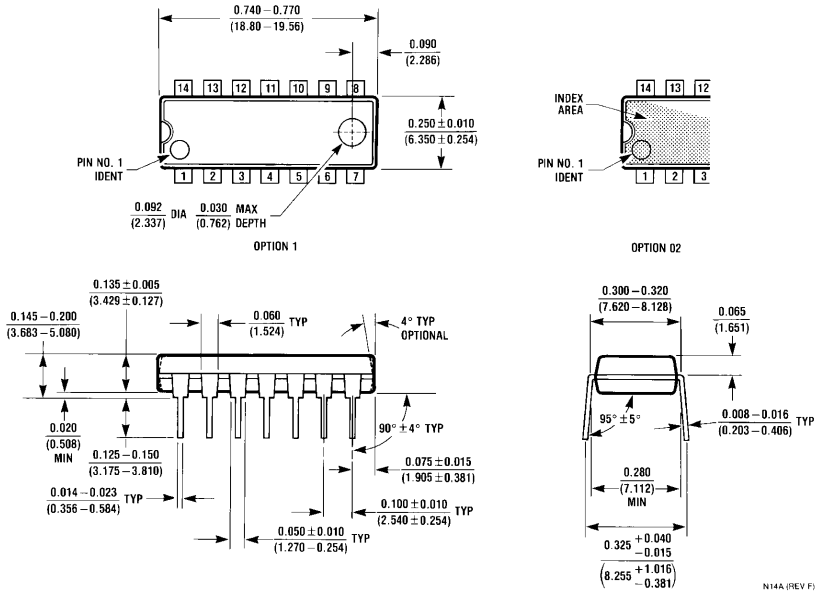

14-Lead Molded Dual-In-Line Package (N)
Order Number DM9601N
NS Package Number N14A

Physical Dimensions inches (millimeters) (Continued)

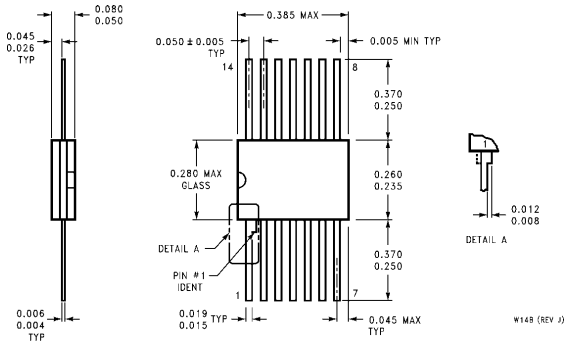

14-Lead Ceramic Flat Package (W)
Order Number 9601FMQB or DM9601W
NS Package Number W14B

LIFE SUPPORT POLICY

NATIONAL'S PRODUCTS ARE NOT AUTHORIZED FOR USE AS CRITICAL COMPONENTS IN LIFE SUPPORT DEVICES OR SYSTEMS WITHOUT THE EXPRESS WRITTEN APPROVAL OF THE PRESIDENT OF NATIONAL SEMICONDUCTOR CORPORATION. As used herein:

1. Life support devices or systems are devices or systems which, (a) are intended for surgical implant into the body, or (b) support or sustain life, and whose failure to perform, when properly used in accordance with instructions for use provided in the labeling, can be reasonably expected to result in a significant injury to the user.
2. A critical component is any component of a life support device or system whose failure to perform can be reasonably expected to cause the failure of the life support device or system, or to affect its safety or effectiveness.

National Semiconductor Corporation
1111 West Bardin Road
Arlington, TX 76017
Tel: 1(800) 272-9959
Fax: 1(800) 737-7018

National Semiconductor Europe
Fax: (+49) 0-180-530 85 86
Email: cnjwge@tevm2.nsc.com
Deutsch Tel: (+49) 0-180-530 85 85
English Tel: (+49) 0-180-532 78 32
Français Tel: (+49) 0-180-532 93 58
Italiano Tel: (+49) 0-180-534 16 80

National Semiconductor Hong Kong Ltd.
13th Floor, Straight Block,
Ocean Centre, 5 Canton Rd.
Tsimshatsui, Kowloon
Hong Kong
Tel: (852) 2737-1600
Fax: (852) 2736-9960

National Semiconductor Japan Ltd.
Tel: 81-043-299-2309
Fax: 81-043-299-2408

National does not assume any responsibility for use of any circuitry described, no circuit patent licenses are implied and National reserves the right at any time without notice to change said circuitry and specifications.