DM9103EP Product Brief

Three Port Ethernet Switch Controller with PCI Interface

Jan. 2007 Rev.1.0

The DM9103 is a fully integrated, high performance, and cost-effective fast Ethernet switch controller with one general PCI bus interface, two ports 10/100Mbps PHY, and one port MII or RMII interface.

Each port of the DM9103 provides four priority transmit queues, that can be defined by port-based, 802.1p VLAN, or IP packet ToS field automatically, to fit the various bandwidth and latency requirement of data, voice, and video applications. Each port also supports ingress and/or egress rate control to provide proper bandwidth. And up to 16 groups of 802.1Q VLAN with Tag/Un-tag functions are supported to provide efficient packet forwarding.

The integrated two ports PHY are compliant with IEEE 802.3u standards. The MII interface provides the flexibility to connect Ethernet PHY, and it can be configured as Reversed MII interface for SoC with MII interface. An alternative interface, the RMII interface, is also provided to connect the lower pin count Ethernet PHY or SoC with RMII interface

Block Diagram

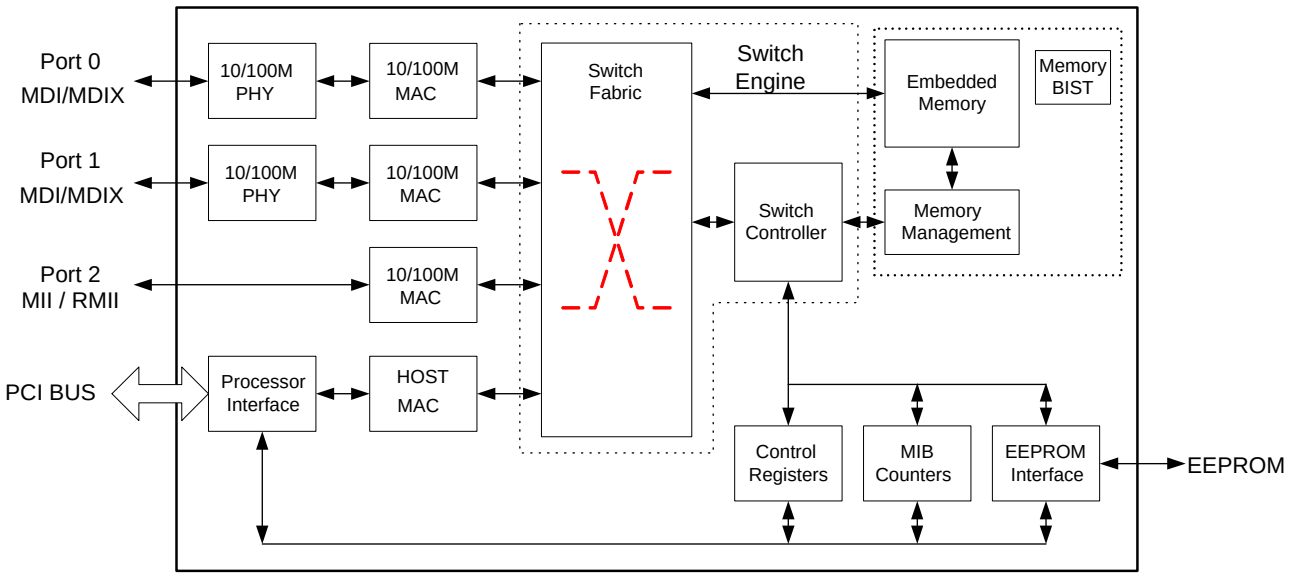

Specifications

- Ethernet Switch with two 10/100Mb PHY, one MII/RMII, and PCI bus interface
- Support Reverse-MII
- PCI bus master architecture
- EEPROM interface for power up configurations
- Support TCP/UDP/IPv4 checksum offload
- Support HP Auto-MDIX
- Support IEEE 802.3x Flow Control in Full-duplex mode
- Support Back Pressure Flow Control in Half-duplex mode
- Per port support 4 priority queues by Port-based, 802.1P QoS, and IP TOS priority
- Support 802.1Q VLAN up-to 16 VLAN group
- Support VLAN ID tag/un-tag options
- Per port support bandwidth, ingress and egress rate control
- Support Broadcast Storming filter function
- Support Store and Forward switching approach
- Support up-to 1K Uni-cast MAC addresses
- Automatic aging scheme
- Support MIB counters for diagnostic
- 128-pin LQFP 1.8V internal core, 3.3V I/O with 5V tolerant

Application

- VoIP CPE (ATA, IP Phone)
- IP STB
- Industrial Control

Ordering Information

Part Number	Pin Count	Package
DM9103EP	**128**	**LQFP (Pb-free)**

DAVICOM Semiconductor, Inc.

No.6, Li-Hsin Rd.VI, Science Park, Hsin-Chu, Taiwan, R.O.C.
TEL: 886-3-5798797
FAX: 886-3-5646929
E-mail: sales@davicom.com.tw