FAIRCHILD SEMICONDUCTOR™

August 1986
Revised April 2000

# DM74S40
# Dual 4-Input NAND Buffer

## General Description

This device contains two independent gates each of which performs the logic NAND function.

## Ordering Code:

| Order Number | Package Number | Package Description |
|---|---|---|
| DM74S40N | N14A | 14-Lead Plastic Dual-In-Line Package (PDIP), JEDEC MS-001, 0.300 Wide |

## Connection Diagram

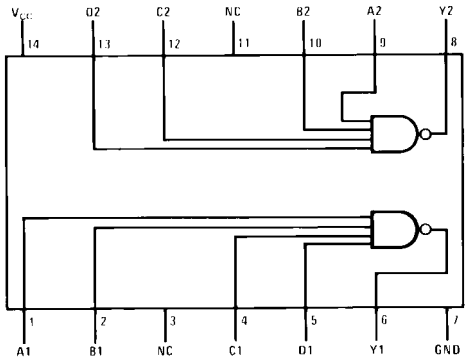


## Function Table

$$Y = \overline{ABCD}$$

| Inputs | | | | Output |
|---|---|---|---|---|
| A | B | C | D | Y |
| X | X | X | L | H |
| X | X | L | X | H |
| X | L | X | X | H |
| L | X | X | X | H |
| H | H | H | H | L |

H = HIGH Logic Level
L = LOW Logic Level
X = Either LOW or HIGH Logic Level

© 2000 Fairchild Semiconductor Corporation 

## Absolute Maximum Ratings(Note 1)

| | |
|---|---|
| Supply Voltage | 7V |
| Input Voltage | 5.5V |
| Operating Free Air Temperature Range | 0°C to +70°C |
| Storage Temperature Range | −65°C to +150°C |

**Note 1:** The "Absolute Maximum Ratings" are those values beyond which the safety of the device cannot be guaranteed. The device should not be operated at these limits. The parametric values defined in the Electrical Characteristics tables are not guaranteed at the absolute maximum ratings. The "Recommended Operating Conditions" table will define the conditions for actual device operation.

## Recommended Operating Conditions

| Symbol | Parameter | Min | Nom | Max | Units |
|---|---|---|---|---|---|
| $V_{CC}$ | Supply Voltage | 4.75 | 5 | 5.25 | V |
| $V_{IH}$ | HIGH Level Input Voltage | 2 | | | V |
| $V_{IL}$ | LOW Level Input Voltage | | | 0.8 | V |
| $I_{OH}$ | HIGH Level Output Current | | | −3 | mA |
| $I_{OL}$ | LOW Level Output Current | | | 60 | mA |
| $T_A$ | Free Air Operating Temperature | 0 | | 70 | °C |

## Electrical Characteristics

over recommended operating free air temperature (unless otherwise noted)

| Symbol | Parameter | Conditions | Min | Typ (Note 2) | Max | Units |
|---|---|---|---|---|---|---|
| $V_I$ | Input Clamp Voltage | $V_{CC}$ = Min, $I_I$ = −18 mA | | | −1.2 | V |
| $V_{OH}$ | HIGH Level Output Voltage | $V_{CC}$ = Min, $I_{OH}$ = Max, $V_{IL}$ = Max | 2.7 | 3.4 | | V |
| $V_{OL}$ | LOW Level Output Voltage | $V_{CC}$ = Min, $I_{OL}$ = Max, $V_{IH}$ = Min | | | 0.5 | V |
| $I_I$ | Input Current @ Max Input Voltage | $V_{CC}$ = Max, $V_I$ = 5.5V | | | 1 | mA |
| $I_{IH}$ | HIGH Level Input Current | $V_{CC}$ = Max, $V_I$ = 2.7V | | | 100 | μA |
| $I_{IL}$ | LOW Level Input Current | $V_{CC}$ = Max, $V_I$ = 0.5V | | | −4 | mA |
| $I_{OS}$ | Short Circuit Output Current | $V_{CC}$ = Max (Note 3) | −50 | | −225 | mA |
| $I_{CCH}$ | Supply Current with Outputs HIGH | $V_{CC}$ = Max | | 10 | 18 | mA |
| $I_{CCL}$ | Supply Current with Outputs LOW | $V_{CC}$ = Max | | 25 | 44 | mA |

**Note 2:** All typicals are at $V_{CC}$ = 5V, $T_A$ = 25°C.

**Note 3:** Not more than one output should be shorted at a time, and the duration should not exceed one second.

## Switching Characteristics

at $V_{CC}$ = 5V and $T_A$ = 25°C

| Symbol | Parameter | $R_L$ = 93Ω | | | | Units |
|---|---|---|---|---|---|---|
| | | $C_L$ = 50 pF | | $C_L$ = 150 pF | | |
| | | Min | Max | Min | Max | |
| $t_{PLH}$ | Propagation Delay Time LOW-to-HIGH Level Output | 2 | 6.5 | 3 | 9 | ns |
| $t_{PHL}$ | Propagation Delay Time HIGH-to-LOW Level Output | 2 | 6.5 | 3 | 9 | ns |

## Physical Dimensions inches (millimeters) unless otherwise noted

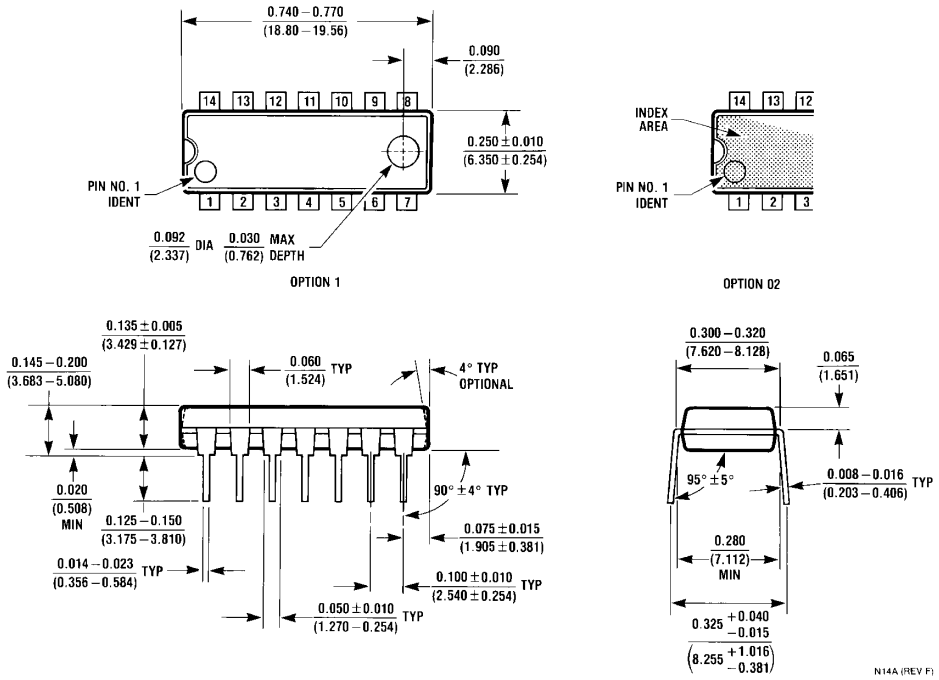


**14-Lead Plastic Dual-In-Line Package (PDIP), JEDEC MS-001, 0.300 Wide**
**Package Number N14A**

Fairchild does not assume any responsibility for use of any circuitry described, no circuit patent licenses are implied and Fairchild reserves the right at any time without notice to change said circuitry and specifications.

**LIFE SUPPORT POLICY**

FAIRCHILD'S PRODUCTS ARE NOT AUTHORIZED FOR USE AS CRITICAL COMPONENTS IN LIFE SUPPORT DEVICES OR SYSTEMS WITHOUT THE EXPRESS WRITTEN APPROVAL OF THE PRESIDENT OF FAIRCHILD SEMICONDUCTOR CORPORATION. As used herein:

1. Life support devices or systems are devices or systems which, (a) are intended for surgical implant into the body, or (b) support or sustain life, and (c) whose failure to perform when properly used in accordance with instructions for use provided in the labeling, can be reasonably expected to result in a significant injury to the user.
2. A critical component in any component of a life support device or system whose failure to perform can be reasonably expected to cause the failure of the life support device or system, or to affect its safety or effectiveness.

**www.fairchildsemi.com**