Common Mode Choke Coil Wire Wound Type

DLW21S Series (0805 Size)

■ Dimensions

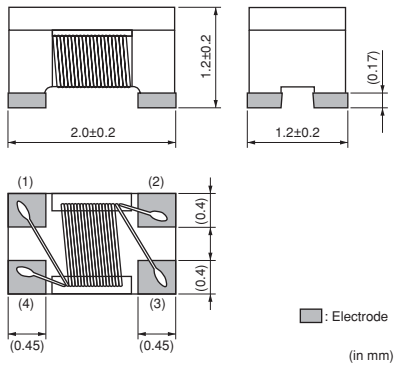

■ Equivalent Circuit

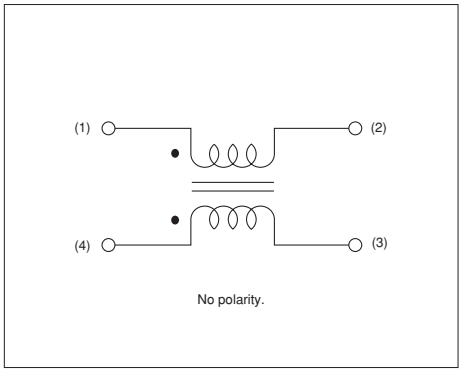

■ Impedance-Frequency Characteristics (Main Items)

DLW21SN_SK2/SQ2 Series

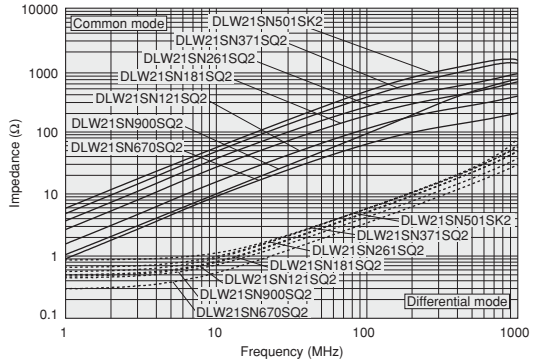

■ Impedance-Frequency Characteristics (Main Items)

DLW21SN_HQ2 Series

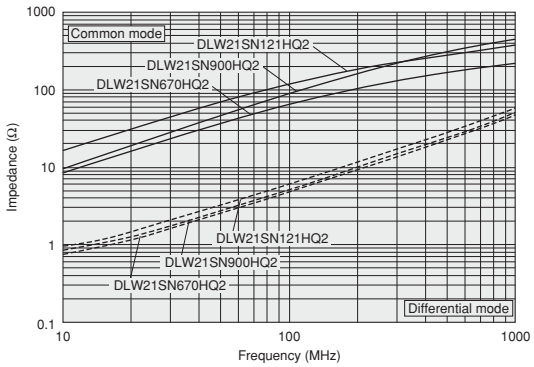

■ Impedance-Frequency Characteristics (Main Items)

DLW21SR_HQ2 Series

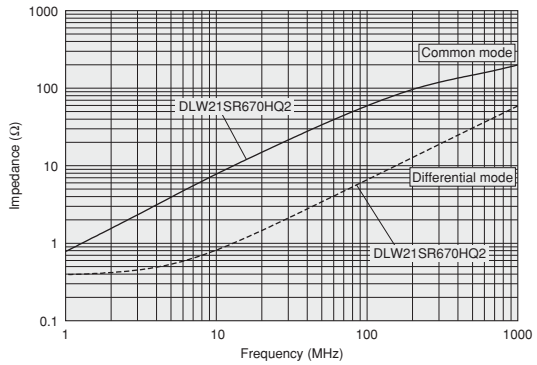

Continued on the following page.

●This data sheet is applied for CHIP COMMON MODE CHOKE COIL used for General Electronics equipment for your design.

⚠Note:

1. This datasheet is downloaded from the website of Murata Manufacturing co., ltd. Therefore, it's specifications are subject to change or our products in it may be discontinued without advance notice. Please check with our sales representatives or product engineers before ordering.
2. This datasheet has only typical specifications because there is no space for detailed specifications. Therefore, please approve our product specifications or transact the approval sheet for product specifications before ordering.

Murata Manufacturing Co., Ltd.
http://www.murata.com/

Continued from the preceding page.

■ Differential Mode Transmission Characteristics (Typ.)

DLW21SN_HQ2 Series

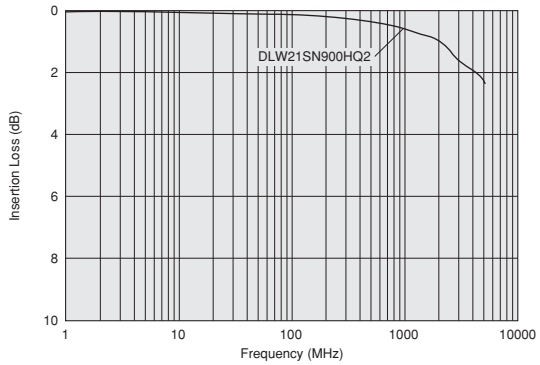

■ Packaging

Code	Packaging	Minimum Quantity
L	180mm Embossed Tape	2000
B	Bulk(Bag)	500

■ Rated Value (□: packaging code)

Part Number	Common Mode Impedance (at 100MHz/20°C)	Rated Current	Rated Voltage	Insulation Resistance (min.)	Withstand Voltage	DC Resistance	Operating Temperature Range
DLW21SN501SK2□	500ohm ±25%	250mA	50Vdc	10M ohm	125Vdc	0.5ohm max.	-40 to +85°C
DLW21SN670SQ2□	67ohm ±25%	400mA	50Vdc	10M ohm	125Vdc	0.25ohm max.	-40 to +85°C
DLW21SN900SQ2□	90ohm ±25%	330mA	50Vdc	10M ohm	125Vdc	0.35ohm max.	-40 to +85°C
DLW21SN121SQ2□	120ohm ±25%	370mA	50Vdc	10M ohm	125Vdc	0.30ohm max.	-40 to +85°C
DLW21SN181SQ2□	180ohm ±25%	330mA	50Vdc	10M ohm	125Vdc	0.35ohm max.	-40 to +85°C
DLW21SN261SQ2□	260ohm ±25%	300mA	50Vdc	10M ohm	125Vdc	0.40ohm max.	-40 to +85°C
DLW21SN371SQ2□	370ohm ±25%	280mA	50Vdc	10M ohm	125Vdc	0.45ohm max.	-40 to +85°C
DLW21SN670HQ2□	67ohm ±25%	320mA	20Vdc	10M ohm	50Vdc	0.31ohm max.	-40 to +85°C
DLW21SN900HQ2□	90ohm ±25%	280mA	20Vdc	10M ohm	50Vdc	0.41ohm max.	-40 to +85°C
DLW21SN121HQ2□	120ohm ±25%	280mA	20Vdc	10M ohm	50Vdc	0.41ohm max.	-40 to +85°C
DLW21SR670HQ2□	67ohm ±25%	400mA	20Vdc	10M ohm	50Vdc	0.25ohm max.	-40 to +85°C

Number of Circuit: 1

■ ⚠Caution/Notice

⚠Caution (Rating)

Do not use products beyond the rated current and rated voltage as this may create excessive heat and deteriorate the insulation resistance.

Notice

Solderability of Tin plating termination chip might be deteriorated when low temperature soldering profile where peak solder temperature is below the Tin melting point is used. Please confirm the solderability of Tin plating termination chip before use.

●This data sheet is applied for CHIP COMMON MODE CHOKE COIL used for General Electronics equipment for your design.

⚠Note:

1. This datasheet is downloaded from the website of Murata Manufacturing co., ltd. Therefore, it's specifications are subject to change or our products in it may be discontinued without advance notice. Please check with our sales representatives or product engineers before ordering.
2. This datasheet has only typical specifications because there is no space for detailed specifications. Therefore, please approve our product specifications or transact the approval sheet for product specifications before ordering.