DL4001 THRU DL4007

SURFACE MOUNT GENERAL RECTIFIER

Reverse Voltage - 50 to 1000 Volts Forward Current - 1.0 Ampere

FEATURES

- Ideal for surface mounted applications
- Low leakage current
- Glass passivated junction

MECHANICAL DATA

Case: Molded plastic
EPOXY: UL 94V-0 rate flame retardant
Teminals : Solder plated solderable per MIL-STD-202E, Method 208 guaranteed
Mounting Position: Any
Weight : 0.12 grams

RoHS Compliant

LL-41 (MELF)

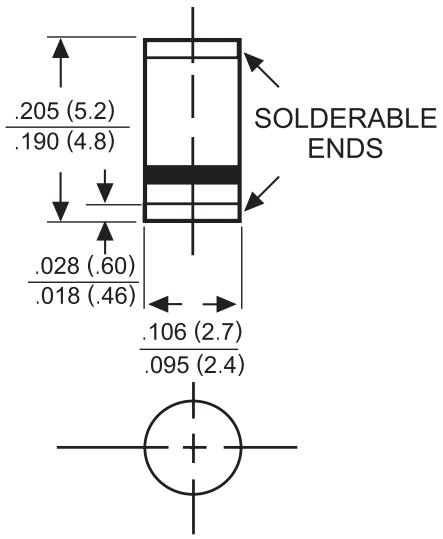

Dimensions in inches and (millimeters)

MAXIMUM RATINGS AND ELECTRICAL CHARACTERISTICS

Ratings at 25°C ambient temperature unless otherwise specified.
Single phase half-wave 60Hz,resistive or inductive load,for capacitive load current derate by 20%.

Characteristic		SYMBOL	DL4001	DL4002	DL4003	DL4004	DL4005	DL4006	DL4007	UNITS
Maximum Recurrent Peak Reverse Voltage		V_{RRM}	50	100	200	400	600	800	1000	V
Maximum RMS Voltage		V_{RMS}	35	70	140	280	420	560	700	V
Maximum DC Blocking Voltage		V_{DC}	50	100	200	400	600	800	1000	V
Maximum Average Forward Rectified Current T_A = 75°C		I_O	1.0							A
Peak Forward Surge Current I_{FM}(surge): 8.3 ms single half sine-wave superimposed on rated load (JEDEC Method)		I_{FSM}	30							A
Maximum Forward Voltage at 1.0A DC		V_F	1.1							V
Maximum DC Reverse Current at Rated DC Blocking Voltage	@T_A = 25°C	I_R	5.0							μA
	@T_A = 125°C		50							
Maximum Thermal Resistance (Note 2)		$R\theta_{JL}$	20							°C/W
Typical Junction Capacitance (Note 1)		C_J	15							pF
Operating and Storage Temperature Range		T_J, T_{STG}	-55 to + 150							°C

NOTES : 1. Measured at 1.0 MHz and applied reverse voltage of 4.0VDC
2. Thermal resistance (Junction to Ambient),.24in² (6.0mm²)coppeer pads to each terminal.

DL4001 THRU DL4007

RATINGS AND CHARACTERISTIC CURVES

FIG.1 –FORWARD CURRENT DERATING CURVE

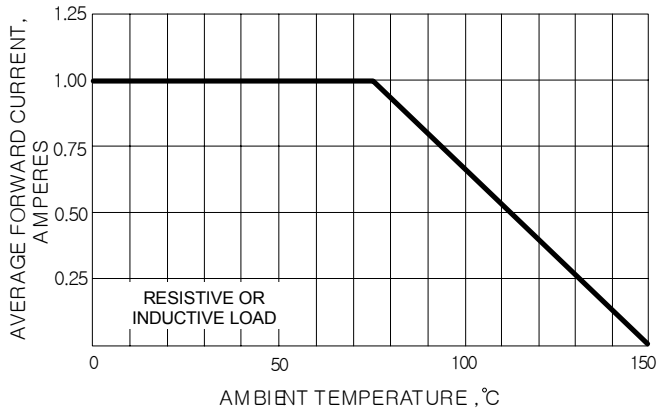

FIG.2 –MAXIMUM NON-REPETITIVE SURGE CURRENT

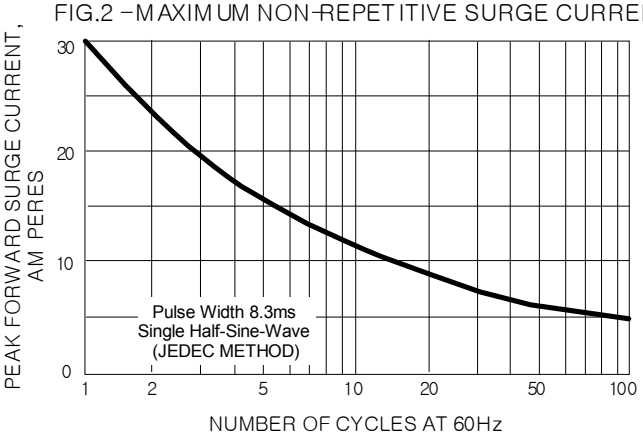

FIG.3 –TYPICAL FORWARD CHARACTERISTICS

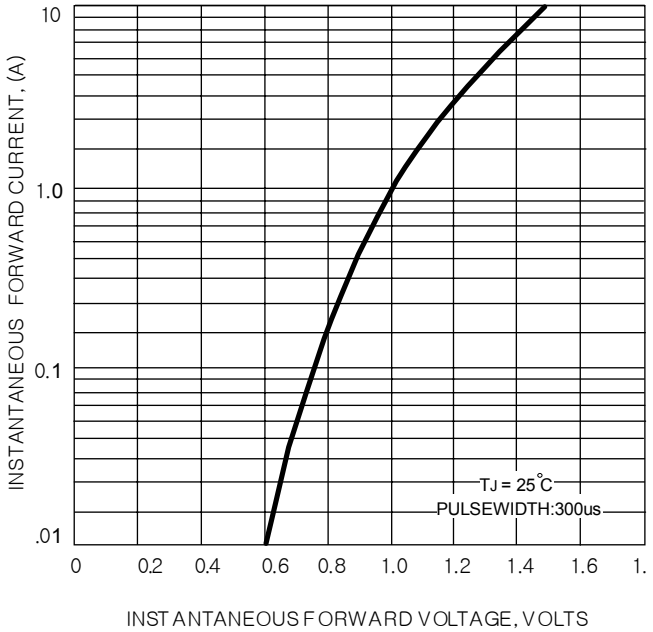

FIG.4 –TYPICAL JUNCTION CAPACITANCE

