Industrial waterproof rectangular connector

DK-2 Series（12 Pin）Type

DDK Ltd.

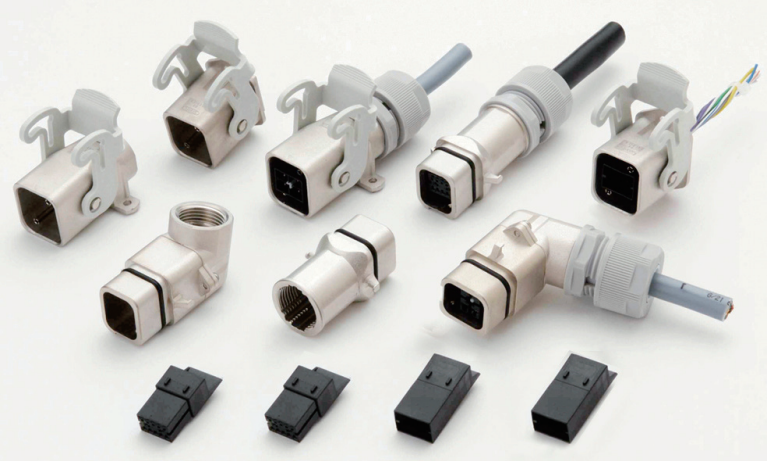

OUTLINE

- ◆ Waterproof rectangular connector was developed for connecting industrial equipment.
- ◆ Crimp termination contacts are the same as those of DK-2000 series.
- ◆ Tab and a receptacle housing are being prepared for the shell shape of the plug, the cable receptacle and the receptacle.
- ◆ DK-2 has one touch locking lever mechanism and a locking supporting system. Pushing contacts in the direction of the mating half makes the connectors automatically and temporarily locked and you can mate the connectors easily.

APPLICATIONS

FA equipment (internal and external), robots, servo motors, medical equipment, communication equipment, OA equipment, various other electrical equipment

SPECIFICATIONS

Item	DK-2 Series
Rated Voltage	250V AC (r.m.s.)
Rated Current	5A max. / Contact
Dielectric Withstanding Voltage	1,500V AC (r.m.s.)/ 1minute
Insulation Resistance	1,000M Ω min. at 500V DC
Contact Resistance	10m Ω max.
Contact Pitch	3.5mm
Applicable Cable Size	AWG#18 — #28
Waterproof Rating	IP67
Number of Contacts	12 Pin

SAFETY STANDARD

c UL us

TÜVRheinland CERTIFIED

Type Approved
Safety
Regular Production
Surveillance

www.tuv.com
ID 2000000000

MATERIALS / FINISHS

RoHS Compliant

Item	Materials / Finishes
Contact	Copper Alloy ／ Au over Ni Plating
Housing	PBT Resin (UL94V-0) ／ Black
Shell / Hood	Aluminum Alloy and Zinc Alloy

◎ Specifications and/or dimensions in this catalogue are subject to change without notice.
Your catalogue checking the latest speifications with our drawings would be highly appreciated.

Unit : mm

12 Pin Waterproof Connectors

Straight Plug

DK-2P12C □□-S

Housing Type
RC : Receptacle Housing
TC : Tab Housing

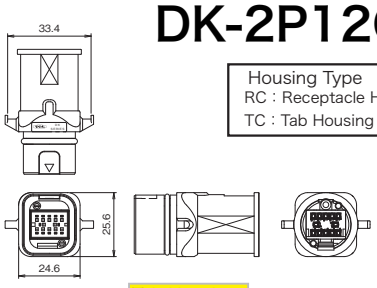

Tab Housing

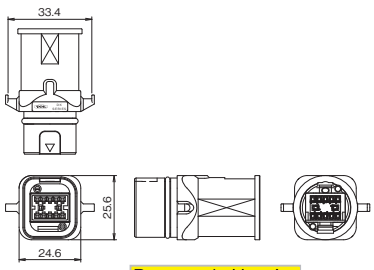

Receptacle Housing

Right Angle Plug

DK-2AP12C □□-S

Housing Type
RC : Receptacle Housing
TC : Tab Housing

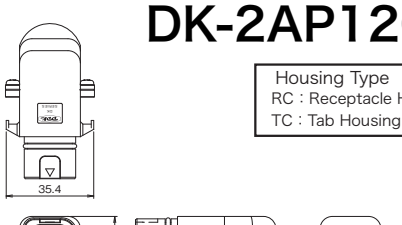

Tab Housing

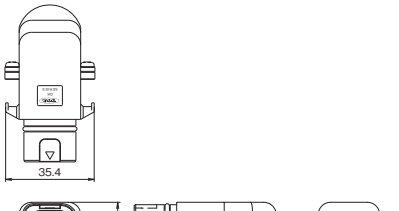

Receptacle Housing

Cable Receptacle

DK-2CR12C □□-S

Housing Type
RC : Receptacle Housing
TC : Tab Housing

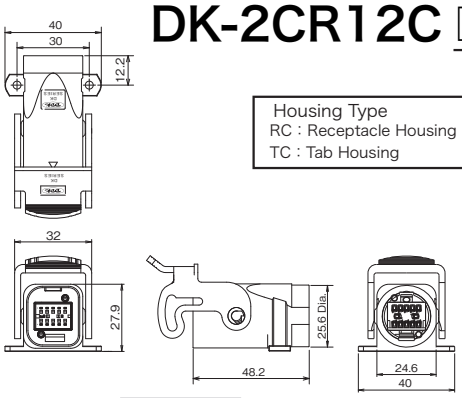

Tab Housing

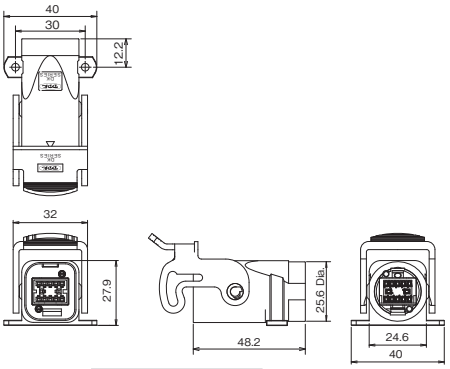

Receptacle Housing

Box Receptacle

DK-2R12C □□-S

Housing Type
RC : Receptacle Housing
TC : Tab Housing

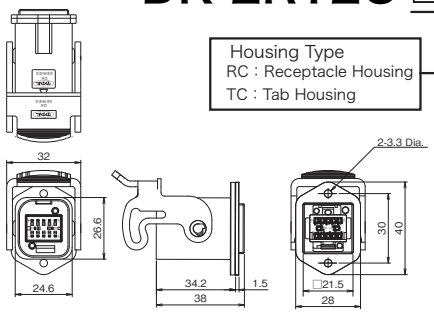

Tab Housing

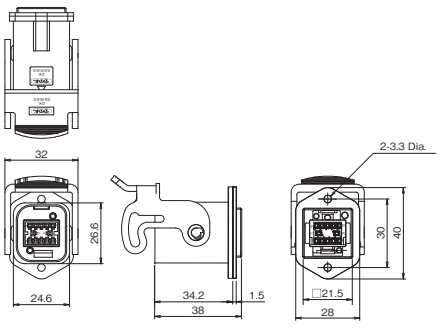

Receptacle Housing

◎ Specifications and/or dimensions in this catalogue are subject to change without notice.
Your catalogue checking the latest speifications with our drawings would be highly appreciated.

Unit : mm

Crimp Contacts

DK-2 Contact

【Contact】

Applicable Cable Size		Insulation O.D. (mm)	Contact Size	Package Style	Part Number		Contact Quantity (pcs)
AWG	mm²				Receptacle Contact	Tab Contact	
28 26 24	0.08 0.12 0.20	0.88 ~ 1.50	S	Reel	DK-2RECSST1-6000	DK-2TABSST1-6000	6,000
				Bag	DK-2RECSLP1-100	DK-2TABSLP1-100	100
22 20 18	0.30 0.50 0.80	1.11 ~ 2.0	M	Reel	DK-2RECMST1-6000	DK-2TABMST1-6000	6,000
				Bag	DK-2RECMLP1-100	DK-2TABMLP1-100	100

【Premating Contact】

Applicable Cable Size		Insulation O.D. (mm)	Contact Size	Package Style	Part Number		Contact Quantity (pcs)
AWG	mm²				Receptacle Contact	Tab Contact	
28 26 24	0.08 0.12 0.20	0.88 ~ 1.50	S	Reel	DK-2RECSST1-E-6000	DK-2TABSST1-E-6000	6,000
				Bag	DK-2RECSLP1-E-100	DK-2TABSLP1-E-100	100
22 20 18	0.30 0.50 0.80	1.11 ~ 2.0	M	Reel	DK-2RECMST1-E-6000	DK-2TABMST1-E-6000	6,000
				Bag	DK-2RECMLP1-E-100	DK-2TABMLP1-E-100	100

DK-2RECSST1-E-6000

- Contact Style
  - REC : Receptacle Contact
  - TAB : Tab Contact
- Applicable Cable Size
  - S : AWG #24 — 28
  - M : AWG #18 — 22
- Package Style
  - ST : Reel
  - LP : Bag
- Contact Quantity
  - 6000 : 6000 pcs / Reel
  - 100 : 100 pcs / Bag
- Contact
  - E : Premating Contact
  - Omit : Contact
- Contact Plating
  - 1 : Au (0.38 μm min) over Ni Plating

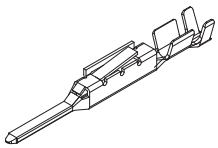

■ Tab Contact

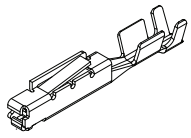

■ Receptacle Contact

◎ Specifications and/or dimensions in this catalogue are subject to change without notice.
Your catalogue checking the latest speifications with our drawings would be highly appreciated.