CIRCULAR DIN JACKS
PC BOARD & PANEL MOUNT
DJ SERIES

DJP SERIES
PANEL MOUNT DIN JACK WITH SOLDER EYELETS



DJP-008-A

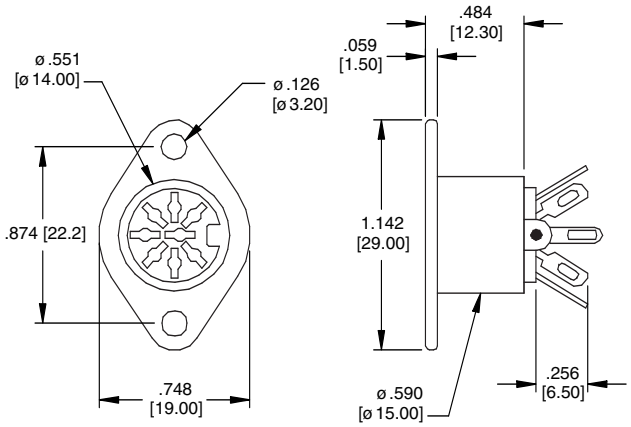

DJP SERIES
PCB MOUNT DIN JACK



DJP-008-B

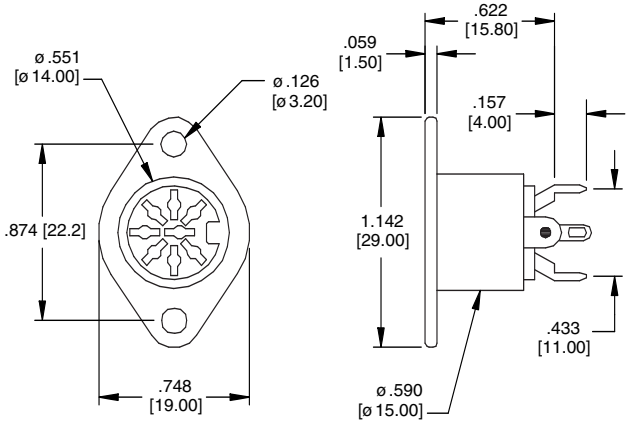

DJN SERIES
PCB MOUNT DIN JACK



DJN-005-B

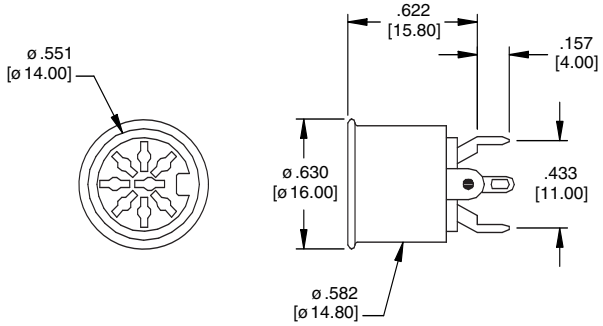

3 Position



4 Position

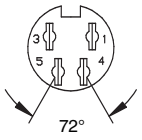

5 Position

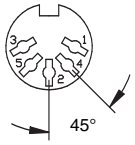

6 Position

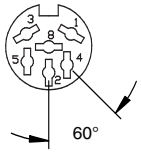

7 Position

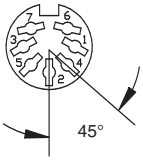

8 Position

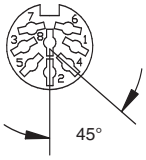

DJN Series (Type A)

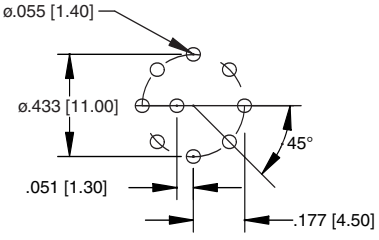

DJP Series

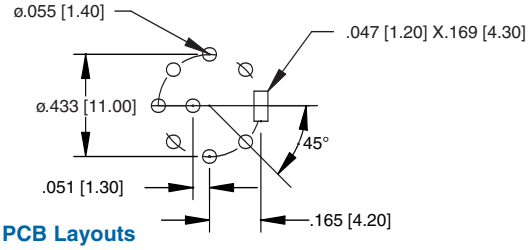

Recommended PCB Layouts