Digital I/O Unit
with Opto-Isolation for USB

DIO-1616LX-USB



* Specifications, color and design of the products are subject to change without notice.

This product is an USB2.0-compliant digital I/O unit used to provide a digital signal I/O function on a PC.

This product can input and output digital signals at 12 - 24VDC. This product features 16 channels of Optocoupler isolated inputs (compatible with current sink output) and 16 channels of Optocoupler isolated open-collector outputs (current sink type). You can use 16 input signals as interrupt inputs. Equipped with the digital filter function to prevent wrong recognition of input signals and output transistor protection circuit (surge voltage protection and over current protection).

As there is compatible with PCI bus-compatible board PIO-16/16L(PCI)H and PCI Express bus-compatible board DIO-1616L-PE in terms of connector shape and pin assignments, it is easy to migrate from the existing system.

Windows driver is bundled with this product. Possible to be used as a data recording device for LabVIEW, with dedicated libraries.

Features

16 channels of Optocoupler isolated inputs (compatible with current sink output) and 16 channels of Optocoupler isolated open-collector outputs (current sink type)
This product has the 16 channels of Optocoupler isolated inputs (compatible with current sink output) and the 16 channels of Optocoupler isolated open-collector outputs (current sink type) whose response speed is 200µsec. Supporting driver voltages of 12 - 24 VDC for I/O.
(12 - 24VDC external circuit power supply is required separately.)

Compatible to USB1.1/USB2.0
Compatible to USB1.1/USB2.0 and capable to achieve high speed transfer at HighSpeed (480 Mbps).

USB HUB function
This product has the USB HUB function. Max. 4 DIO-1616LX-USB can be used in 1 USB port of PC. When you use 4 or more DIO-1616LX-USB, you can do by connecting DIO-1616LX-USB to the another USB port of PC side. *1
Also, you can connect the CONTEC's USB device other than DIO-1616LX-USB to the USB port of DIO-1616LX-USB. *2*3

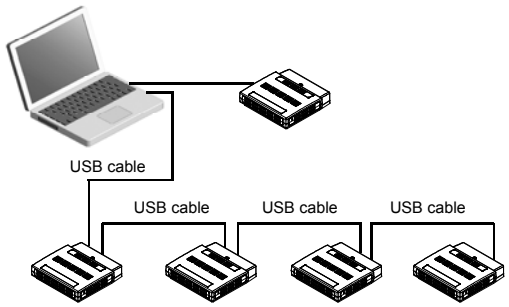

Optocoupler bus isolation
As the USB (PC) is isolated from the input and output interfaces by Optocouplers, this product has excellent noise performance.

You can use 16 input signals as interrupt request signals.
You can use 16 input signals as interrupt request signals and also disable or enable the interrupt in bit units and select the edge of the input signals, at which to generate an interrupt.

This product has a digital filter to prevent wrong recognition of input signals from carrying noise or a chattering.
This product has a digital filter to prevent wrong recognition of input signals from carrying noise or a chattering. All input terminals can be added a digital filter, and the setting can be performed by software.

Output circuits include zener diodes for surge voltage protection and poly-switches for overcurrent protection.
Zener diodes are connected to the output circuits to protect against surge voltages. Similarly, polyswitches are fitted to each group of 8channels outputs for over-current protection. The output rating is max. 35VDC, 100mA per channel.

Connectors are compatible with PCI/PCI Express bus-compatible board
As there is compatible with PIO-16/16L(PCI)H and DIO-1616L-PE in terms of connector shape and pin assignments, it is easy to migrate from the existing system. If the system of this product is created by the digital I/O driver API-DIO(98/PC), it is required to replace it with API-DIO(WDM).

Windows compatible driver libraries are attached.
Using the attached digital I/O driver API-DIO(WDM) makes it possible to create applications of Windows. In addition, a diagnostic program by which the operations of hardware can be checked is provided.

LabVIEW is supported by a plug-in of dedicated library VI-DAQ.
Using the dedicated library VI-DAQ makes it possible to make a LabVIEW application.

*1 When you use the USB port included on the DIO-1616LX-USB, use 5VDC power supply for self-power. For more details on the connection with 5VDC power supply, refer to page 4, "Connection with 5VDC Power Supply for Self-power".
*2 Do not connect the device other than that of CONTEC's USB to the USB port included on the DIO-1616LX-USB. Otherwise, this may cause a failure or malfunction.
*3 When connecting multiple units with USB HUB function and set up them, do one at a time and complete setup for the previous unit before starting to do the next unit.

Specification

Item			Specification
Input section			
	Number of input signal channels		16 channels (all available for interrupts) (1 common in 16 channels)
	Input format		Optocoupler isolated input (Compatible with current sink output) (Negative logic *1)
	Input resistance		4.7kΩ
	Input ON current		2.0mA or more
	Input OFF current		0.16mA or less
	Interrupt		16 interrupt input signals are arranged into a single output of interrupt request signal INTA. An interrupt is generated at the rising edge (HIGH-to-LOW transition) or falling edge (LOW-to-HIGH transition) (set by software).
	Response time		200μsec within *2
Output section			
	Number of output signal channels		16 channels
	Output format		Optocoupler isolated open collector output (current sink type) (Negative logic*1)
	Output rating	Output voltage	35VDC (Max.)
		Output current	100mA (per channel) (Max.)
	Residual voltage with output on		0.5V or less (Output current≤50mA), 1.0V or less (Output current≤100mA)
	Surge protector		Zener diode RD47FM(NEC) or equivalent
	Response time		200μsec within *2
USB section			
	Bus specification		USB Specification 2.0/1.1 standard
	USB transfer rate		12Mbps (Full-speed), 480Mbps (High-speed) *3
	Power supply		Bus power / Self-power *4
Common section			
	Number of terminals used at the same time		127 terminals (Max.) *5
	Dielectric strength		1000Vrms
	External circuit power supply*6		12 - 24VDC(±10%)
	Current consumption (Max.)		5VDC 300mA
	Operating conditions		0 - 50ºC, 10 - 90%RH (No condensation)
	Allowable distance of signal extension		Approx. 50m (depending on wiring environment)
	Physical dimensions (mm)		180(W) x 140(D) x 34(H) (No protrusions)
	Weight		300g (Not including the USB cable, attachment)
	Connector		37-pin D-SUB connector [F(female)type] DCLC-J37SAF-20L9E [mfd.by JAE]or equivalence to it
	Attached cable		USB cable 1.8m

*1 Data "0" and "1" correspond to the High and Low levels, respectively.
*2 The Optocoupler's response time comes.
*3 This depends on the PC environment used (OS and USB host controller).
*4 Use 5VDC power supply for self-power when you use the USB hub function.
*5 As a USB hub is also counted as one device, you cannot just connect 127 USB unit.
*6 External circuit power supply is required separately.

Support Software

Windows version of digital I/O driver API-DIO(WDM) [Stored on the bundled CD-ROM driver library API-USBP(WDM)]

It is the library software, and which supplies command of hardware produced by our company in the form of standard Win32 API function (DLL). Using programming languages supporting Win32API functions, such as Visual Basic and Visual C++ etc., you can develop high-speed application software with feature of hardware produced by our company. In addition, you can verify the operation of hardware using Diagnostic programs.

< Operating environment >

OS	Windows Vista, XP, Server 2003, 2000, Me, 98
Adaptation language	Visual Basic, Visual C++, Visual C#, Delphi, C++ Builder

For more details on the supported OS, applicable language and how to download the updated version, please visit the CONTEC's Web site (http://www.contec.com/apiusbp/).

Data acquisition VI library for LabVIEW VI-DAQ (Available for downloading (free of charge) from the CONTEC web site.)

This is a VI library to use in National Instruments LabVIEW. VI-DAQ is created with a function form similar to that of LabVIEW's Data Acquisition VI, allowing you to use various devices without complicated settings.
See http://www.contec.com/vidaq/ for details and download of VI-DAQ.

Cable & Connector

Cable (Option)

Flat Cable with 37-Pin D-SUB Connectors at either Ends
: PCB37P-1.5 (1.5m)
: PCB37P-3 (3m)
: PCB37P-5 (5m)

Shielded Cable with 37-pin D-SUB connectors at either ends
: PCB37PS-0.5P (0.5m)
: PCB37PS-1.5P (1.5m)
: PCB37PS-3P (3m)
: PCB37PS-5P (5m)

Flat Cable with 37-Pin D-SUB Connector at One End
: PCA37P-1.5 (1.5m)
: PCA37P-3 (3m)
: PCA37P-5 (5m)

Shield Cable with 37-Pin D-SUB Connector at One End
: PCA37PS-0.5P (0.5m)
: PCA37PS-1.5P (1.5m)
: PCA37PS-3P (3m)
: PCA37PS-5P (5m)

Connector (Option)

37-pin D-SUB (Male) Connector Set (5 Pieces)
: CN5-D37M

Accessories

Accessories (Option)

Screw Terminal Unit (M3 x 37P) : EPD-37A *1 *2
Screw Terminal Unit (M3.5 x 37P) : EPD-37 *1
General Purpose Terminal (M3 x 37P) : DTP-3A *1
Screw Terminal (M2.6 x 37P) : DTP-4A *1
Signal Monitor / Output Accessory for Digital I/O (32P) : CM-32(PC)E *1
AC adapter (input : 90 - 264VAC, output : 5VDC 2.0A) : POA200-20
USB I/O Unit Bracket for X Series : BRK-USB-X

*1 A PCB37P or PCB37PS optional cable is required.
*2 "Spring-up" type terminal is used to prevent terminal screws from falling off.
* Check the CONTEC's Web site for more information on these options.

Packing List

Unit [DIO-1616LX-USB] …1
USB cable (1.8m) …1
USB cable attachment on the main unit's side
(For Mini B connector side) …1
Clamps for prevention of cable on the main unit's side…1
CD-ROM *1 [API-USBP(WDM)] …1
Power connector MC1,5/3-ST-3,5 …1
First step guide …1
Ferrite core …1

*1 The CD-ROM contains the driver software and User's Guide.

Block Diagram

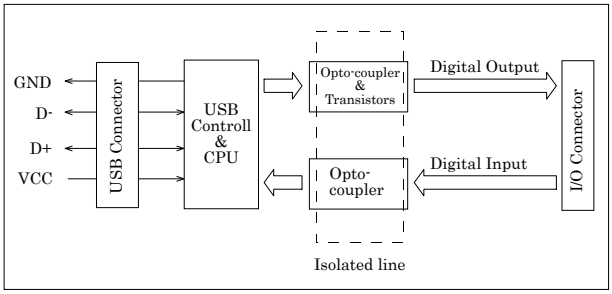

Physical Dimensions

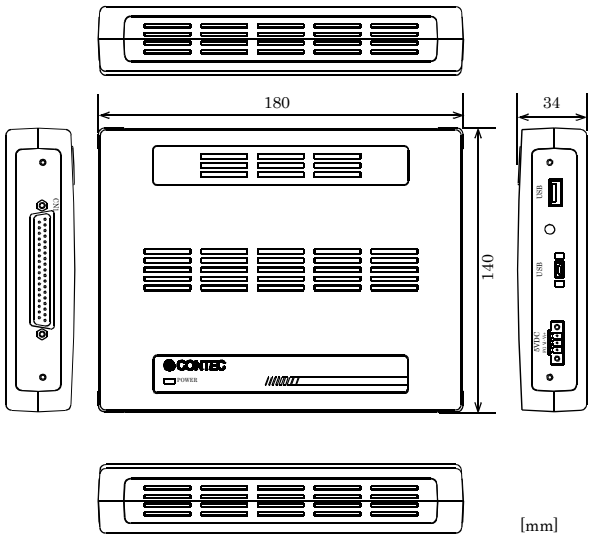

Using the Connectors

Connecting to a Connector

To connect an external device to this product, plug the cable from the device into the interface connector (CN1) of unit shown below.

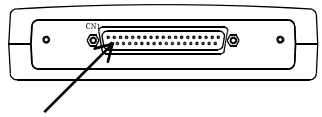

Interface connector (CN1)

- Connector used
  37-pin D-SUB connector [F(female)type]
  DCLC-J37SAF-20L9E [mfd by JAE]+ equivalence to it Lock nut UNC #4-40 (inch screw threads)

- Compatible connector
  17JE-23370-02(D8C) [mfd by DDK, M(male)type]
  FDCD-37P [mfd by HIROSE, M(male)type]
  DC-37P-N [mfd by JAE, M(male)type]

* Please refer to page 2 for more information on the supported cable and accessories.

Connector Pin Assignment

Pin Assignments of Interface Connector (CN1)

CN1



Pin No.	Signal name	Meaning	Pin No.	Signal name	Meaning
			19	N.C.	
37	OP 2/3	Common plus pin for +2/+3 output port	18	IP 0/1	Common plus pin for +0/+1 input port
36	O-37	+3 port (output)	17	I-17	+1 port (input)
35	O-36		16	I-16	
34	O-35		15	I-15	
33	O-34		14	I-14	
32	O-33		13	I-13	
31	O-32		12	I-12	
30	O-31		11	I-11	
29	O-30		10	I-10	
28	O-27	+2 port (output)	9	I-07	+0 port (input)
27	O-26		8	I-06	
26	O-25		7	I-05	
25	O-24		6	I-04	
24	O-23		5	I-03	
23	O-22		4	I-02	
22	O-21		3	I-01	
21	O-20		2	I-00	
20	ON 2/3	Common minus pin for +2/+3 output port	1	ON 2/3	Common minus pin for +2/+3 output port

I-00 - I-17	16 input signal pins. Connect output signals from the external device to these pins.
O20 - O37	16 output signal pins. Connect these pins to the input signal pins of the external device.
IP 0/1	Connect the positive side of the external power supply. These pins are common to 16 input signal pins.
OP 2/3	Connect the positive side of the external power supply. These pins are common to 16 output signal pins.
ON 2/3	Connect the negative side of the external power supply. These pins are common to 16 output signal pins.
N.C.	This pin is left unconnected.

Connecting Input Signals

Connect the input signals to a device which can be current-driven, such as a switch or transistor output device. The connection requires an external power supply to feed currents.
This product inputs the ON/OFF state of the current-driven device as a digital value.

Input Circuit

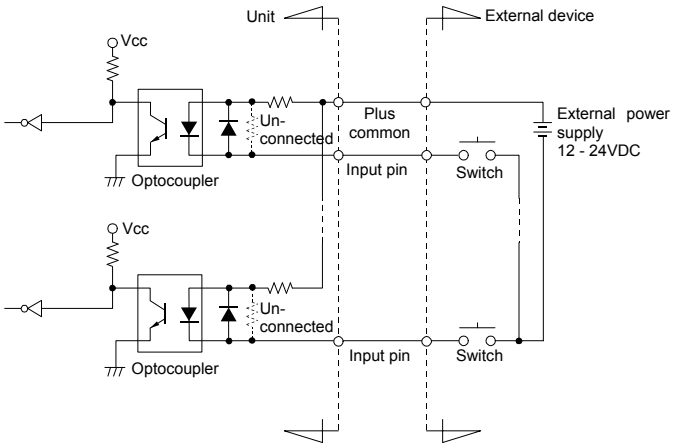

* I-xx represents the input pin.

The input circuits of interface blocks of this product is illustrated in the image above.
The signal inputs are isolated by Optocouplers (compatible with current sink output). This product therefore requires an external power supply to drive the inputs. The power requirement for each input pin is about 5.1mA at 24VDC (about 2.6mA at 12VDC).

Connecting a Switch

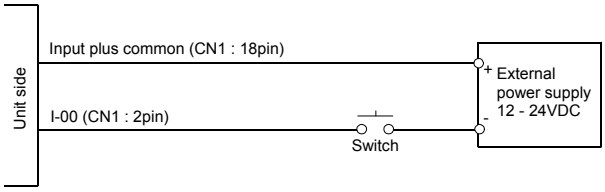

When the switch is ON, the corresponding bit contains 1.
When the switch is OFF, by contrast, the bit contains 0.

Connecting Output Signals

Connect the output signals to a current-driven controlled device such as a relay or LED.
The connection requires an external power supply to feed currents.
This product controls turning on/off the current-driven controlled device using a digital value.

Output Circuit

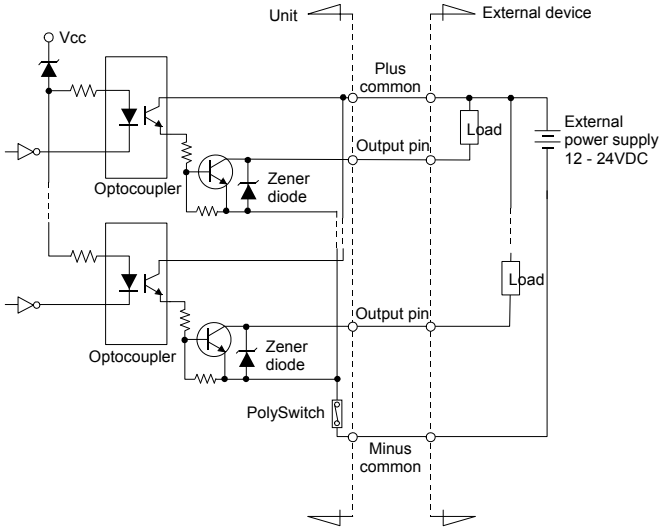

* O-xx represents the output pin.

The output circuits of interface blocks of this product is illustrated in the image above. The signal output section is an Optocoupler isolated, open-collector output (current sink type). Driving the output section requires an external power supply. The rated output current per channel is 100mA at maximum. The output section can also be connected to a TTL level input as it uses a low-saturated transistor for output. The residual voltage (low-level voltage) between the collector and emitter with the output on is 0.5V or less at an output current within 50mA or at most 1.0V at an output current within 100mA.
A zener diode is connected to the output transistor for protection from surge voltages. A PolySwitch-based overcurrent protector is provided for every 8 output transistors. When the overcurrent protector works, the output section of this product is temporarily disabled. If this is the case, turn of the power to the PC and the external power supply and wait for a few minutes, then turn them on back.

⚠ CAUTION
When the PC is turned on, all output are reset to OFF.

Connection to the LED

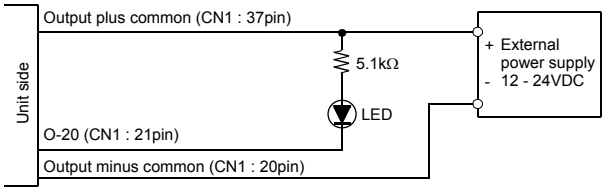

When "1" is output to a relevant bit, the corresponding LED comes on.
When "0" is output to the bit, in contrast, the LED goes out.

Example of Connection to TTL Level Input

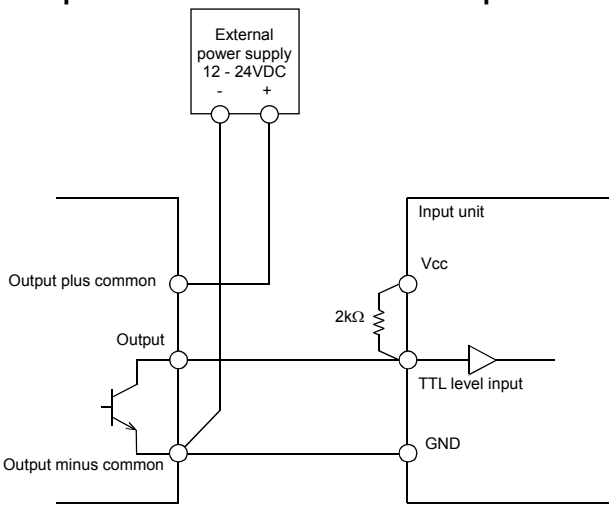

Connecting the Sink Type Output and Sink Output Support Input

The following example shows a connection between a sink type output (output side) and a sink output support input (input side). Refer to this connection example when you connect such this product to each other.

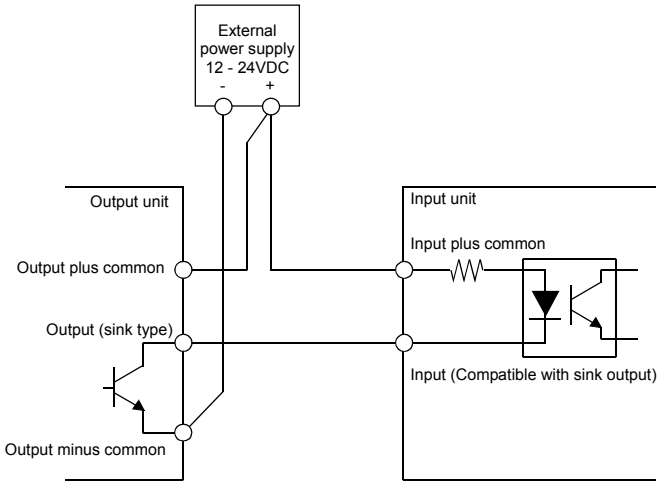

Connection with 5VDC Power Supply for Self-power

When you use the HUB function (USB Type A connector) included on the DIO-1616LX-USB, this product must be connected with 5VDC power supply (in a self-powered state). Connect with 5VDC power supply by using +5VDC input pin.

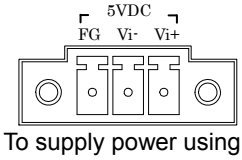

Vi+ Power supply (5V)
Vi- Power supply (GND)
FG Frame ground

To supply power using the bundled power connector (MC1,5/3-ST-3,5, compatible cable
: AWG28 - 16), strip the end of the compatible cable, insert it into the power connector, then securely screw it.

When using the optional AC adapter [POA200-20], please connect directly to the input terminals.

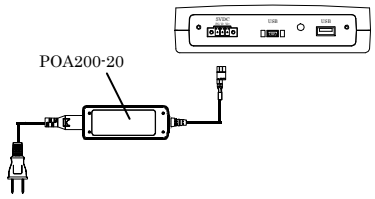

⚠ CAUTION

Connect 5VDC power supply to the main unit. Next, connect the USB cable to the PC. Do not turn it on or off when using. If you remove, USB cable is first and then 5VDC power supply.