Design Idea DI-20
TOPSwitch®-GX
145 W PC Main ATX Supply

Application	Device	Power Output	Input Voltage	Output Voltage	Topology
PC Main	TOP247	145 W	90-130 VAC / 180-265 VAC	3.3 V / 5 V / 12 V	Forward

Design Highlights

- 145 W cont. (160 W peak) in PC ATX form factor
- *TOPSwitch-GX* integrated features enable extremely low component count
- Meets 1 W standby spec. (0.91 W input 0.5 W output)
- High efficiency (71% minimum)
- Integrated line undervoltage and overvoltage detection
- Low EMI due to frequency jitter
- SOURCE referenced TO-220 tab lowers conducted EMI
- Maximum duty cycle (DC_{MAX}) reduction prevents transformer saturation for fault and transient loads
- Uses conventional magamp for 3.3 V output
- Meets CISPR22B/EN55022B conducted EMI

Operation

TOPSwitch-GX integrates many features designed for use with forward converters. Transistors Q4, Q6, R1, R2, R3, R5 and R6 form an active capacitor (C2, C3) balancing circuit, operating only as needed to minimize zero-load power consumption. Resistors R3, R5 and R6 implement start-up undervoltage lockout, which prevents the supply from starting below 180 VDC. Components R4, R14, Q1 and R30 implement an independent undervoltage using the X pin, which allows the supply to continue delivering power all the way down to 140 VDC (increasing hold-up time). Resistor R7 provides additional hysteresis.

The primary side components D1, VR3-5 and C4, along with secondary side C9 and R30, implement the Zener/capacitor reset/clamp circuit. This circuit provides reset voltage for the transformer and clamps the DRAIN pin voltage to a safe level (<~600 V) under all conditions.

The reset circuit works in conjunction with the DC_{MAX} reduction circuit (R8, R36, C22, VR19 and D18) to limit the maximum duty cycle and prevent transformer saturation under fault and transient conditions.

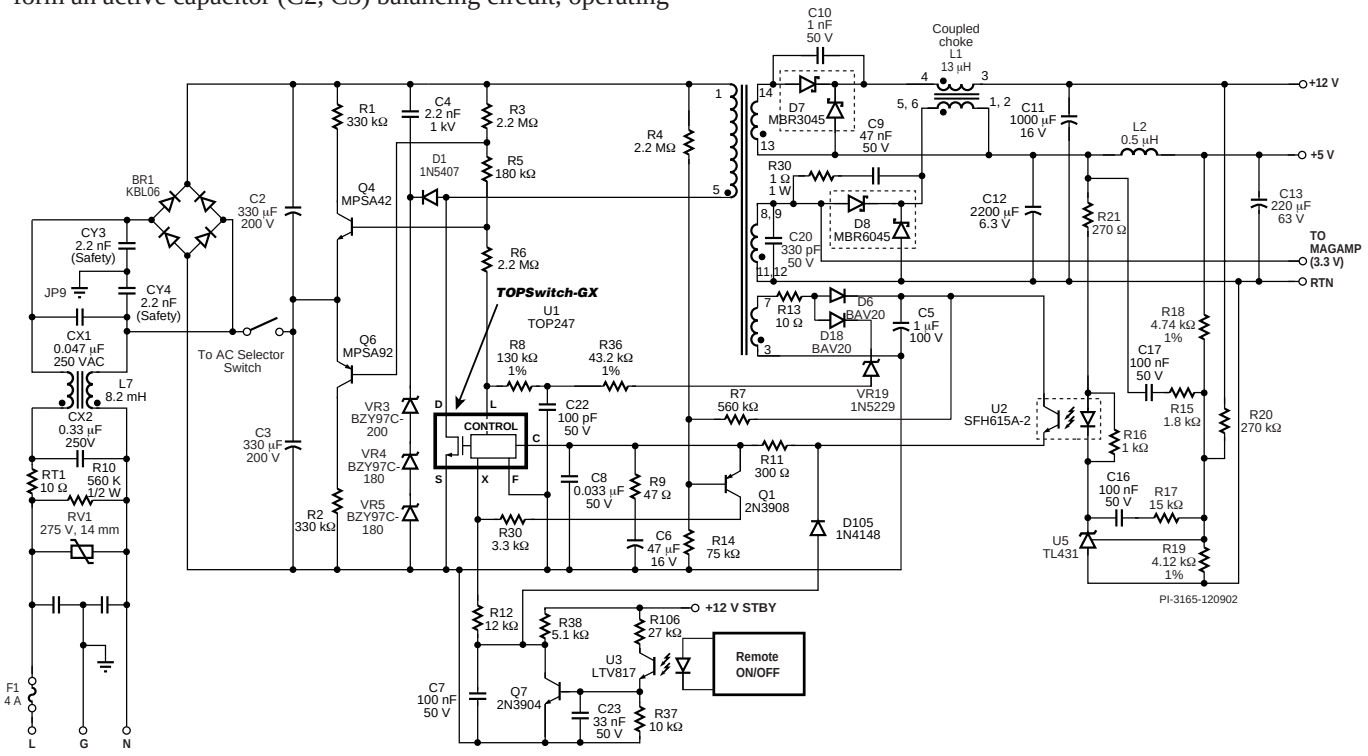

Figure 1. 145 W (160 W pk.) PC Main Power Supply Schematic (Note: Schematic does not include transformer Y-capacitor).

The components R12, C7, R38, Q7, C23, R37, U3, R106 and D105 implement the remote ON/OFF drive circuit. During the ON state, U3 and hence Q7 conduct pulling the X pin to SOURCE via resistor R12 (which sets the current limit).

During the OFF state, U3 and Q7 are off, allowing the X pin to be pulled high by the +15 V standby supply via R38 and R12 and putting the *TOPSwitch-GX* into the OFF state. Components R38 and D105 reduce device consumption to around 2 mW by supplying external current to the CONTROL pin from the +15 V standby supply. Resistor R11 is required to allow external bias feed.

Key Design Points

- Transformer reset: Use recommended Zener/capacitor clamp/reset circuit to maintain drain voltage <600 V and DC_{MAX} reduction to prevent transformer saturation.
- Maintain maximum flux density on transformer (T1) < 2500 gauss
- Check for balanced currents on coupled inductor (L1), for all load combinations
- Use *PI Expert* (*PIXls*) Design Spreadsheet and refer to Application Note AN-30, for details on designing forward converters with *TOPSwitch-GX*

Due to the complexity of this design it is not possible to include all details in this Design Idea. For detailed design information on the PC Main please refer to Design Accelerator Kit (DAK-12) and Engineering Prototype Report EPR-12.

For all other information please refer to Power Integrations' Web site.

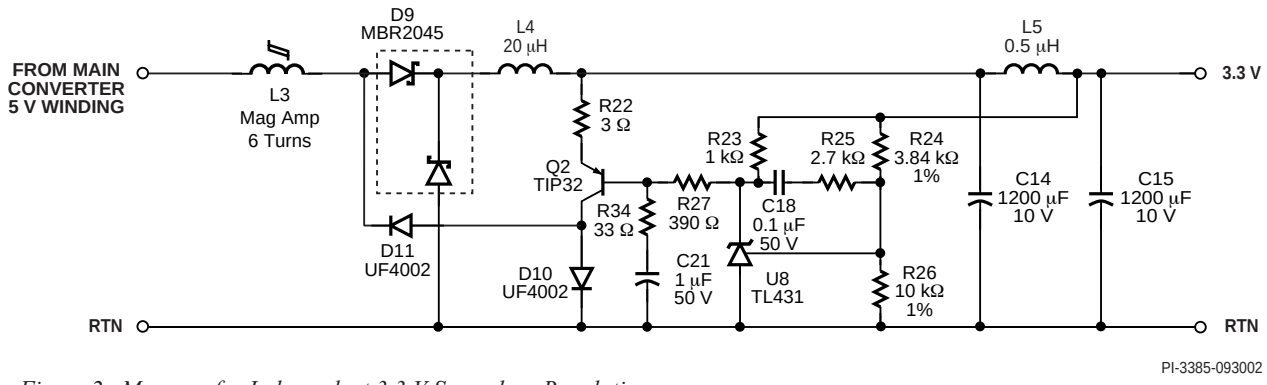

Figure 2. Magamp for Independent 3.3 V Secondary Regulation.

For the latest updates, visit our Web site: *www.powerint.com*
Power Integrations reserves the right to make changes to its products at any time to improve reliability or manufacturability.
Power Integrations does not assume any liability arising from the use of any device or circuit described herein, nor does it convey any license under its patent rights or the rights of others. The products and applications illustrated herein (including circuits external to the products and transformer construction) may be covered by one or more U.S. and foreign patents or potentially by pending U.S. and foreign patent applications assigned to Power Integrations. A complete list of Power Integrations' patents may be found at www.powerint.com.

The PI Logo, ***TOPSwitch***, ***TinySwitch***, ***LinkSwitch*** and ***EcoSmart*** are registered trademarks of Power Integrations, Inc. ***PI Expert*** is a trademark of Power Integrations, Inc. ©Copyright 2002, Power Integrations, Inc.

WORLD HEADQUARTERS AMERICAS
Power Integrations, Inc.
San Jose, CA 95138 USA
Customer Service:
Phone: +1 408-414-9665
Fax: +1 408-414-9765
e-mail: usasales@powerint.com

CHINA
Power Integrations International Holdings, Inc.
China
Phone: +86-755-8367-5143
Fax: +86-755-8377-9610
e-mail: chinasales@powerint.com

EUROPE & AFRICA
Power Integrations (Europe) Ltd.
United Kingdom
Phone: +44-1344-462-300
Fax: +44-1344-311-732
e-mail: eurosales@powerint.com

KOREA
Power Integrations International Holdings, Inc.
Seoul, Korea
Phone: +82-2-782-2840
Fax: +82-2-782-4427
e-mail: koreasales@powerint.com

SINGAPORE
Power Integrations, Singapore
Republic of Singapore 308900
Phone: +65-6358-2160
Fax: +65-6358-2015
e-mail: singaporesales@powerint.com

JAPAN
Power Integrations, K.K.
Keihin-Tatemono 1st Bldg.
Japan
Phone: +81-45-471-1021
Fax: +81-45-471-3717
e-mail: japansales@powerint.com

APPLICATIONS HOTLINE
World Wide +1-408-414-9660

TAIWAN
Power Integrations International Holdings, Inc.
Taipei, Taiwan
Phone: +886-2-2727-1221
Fax: +886-2-2727-1223
e-mail: taiwansales@powerint.com

INDIA (Technical Support)
Innovatech
Bangalore, India
Phone: +91-80-226-6023
Fax: +91-80-228-9727
e-mail: indiasales@powerint.com

APPLICATIONS FAX
World Wide +1-408-414-9760