Shielded Power Inductors – DH3316



These power inductors feature a small footprint, magnetic shielding and very high efficiency, making them ideal for high performance DC-DC converter applications.

Like all Coilcraft surface mount power inductors, they are designed with a flat top for reliable pick and place operations. The terminations wrap around the end of the base, ensuring a sound solder fillet and simplifying inspection.

Saturation current ratings up to 10 A and rms current ratings as high as 6 A are available. Very low DC resistance keeps power losses to a minimum.

In addition to the standard values shown here, DH3316 inductors in custom values are also available. For free evaluation samples or to order, contact Coilcraft or visit **www.coilcraft.com**.

Part number[1]	L ±20%[2] (µH)	DCR max (Ohms)	SRF typ[3] (MHz)	Isat[4] (A)	Irms[5] (A)
DH3316P-102ML_	1.0	0.016	290	10.0	6.0
DH3316P-222ML_	2.2	0.020	150	6.7	4.1
DH3316P-332ML_	3.3	0.025	75	5.7	3.7
DH3316P-472ML_	4.7	0.030	55	4.6	3.2
DH3316P-682ML_	6.8	0.048	42	3.6	2.6
DH3316P-103ML_	10	0.065	37	3.2	2.2
DH3316P-153ML_	15	0.084	27	2.6	1.8
DH3316P-223ML_	22	0.126	24	2.2	1.6
DH3316P-333ML_	33	0.198	17	1.7	1.2
DH3316P-473ML_	47	0.295	12	1.5	1.0
DH3316P-683ML_	68	0.415	11	1.1	0.90
DH3316P-104ML_	100	0.620	9	1.0	0.60
DH3316P-154ML_	150	0.970	7	0.8	0.51
DH3316P-224ML_	220	1.270	6	0.65	0.44
DH3316P-334ML_	330	1.850	5	0.50	0.38
DH3316P-684ML_	680	4.400	3	0.35	0.23
DH3316P-105ML_	1000	5.850	2.5	0.27	0.22

1. When ordering, please specify **packaging** code:

   DH3316P-105MLD

   Packaging: **D** = 13″ machine ready reel. EIA-481 embossed plastic tape (1000 parts per full reel).
   B = Less than full reel. In tape, but not machine ready. To have a leader and trailer added ($25 charge), use code letter D instead.
2. Inductance tested at 0.1 Vrms, 100 kHz, 0 Adc.
3. SRF measured using Agilent/HP 8753D network analyzer.
4. DC current at which the inductance drops 10% (typ) from its value without current.
5. Current that causes a 40°C rise from 25°C ambient.
6. Operating temperature range –40°C to +85°C
7. Electrical specifications at 25°C

Refer to Doc 362 “Soldering Surface Mount Components” before soldering.

Coilcraft®
www.coilcraft.com

US +1-847-639-6400 sales@coilcraft.com
UK +44-1236-730595 sales@coilcraft-europe.com
Taiwan +886-2-2264 3646 sales@coilcraft.com.tw
China +86-21-6218 8074 sales@coilcraft.com.cn
Singapore + 65-6484 8412 sales@coilcraft.com.sg

Document 303-1 Revised 12/13/11

© Coilcraft Inc. 2013
This product may not be used in medical or high risk applications without prior Coilcraft approval.
Specification subject to change without notice.
Please check web site for latest information.

Shielded Power Inductors – DH3316 Series

Typical L vs Frequency

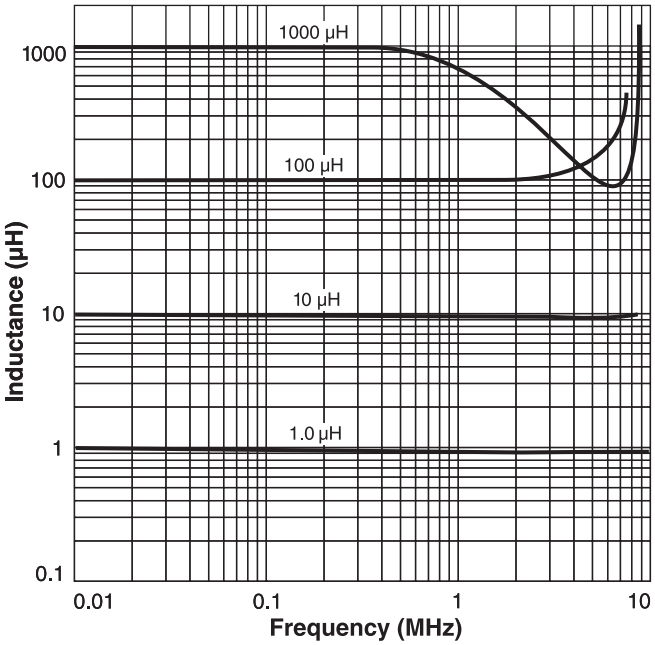

Typical L vs Current

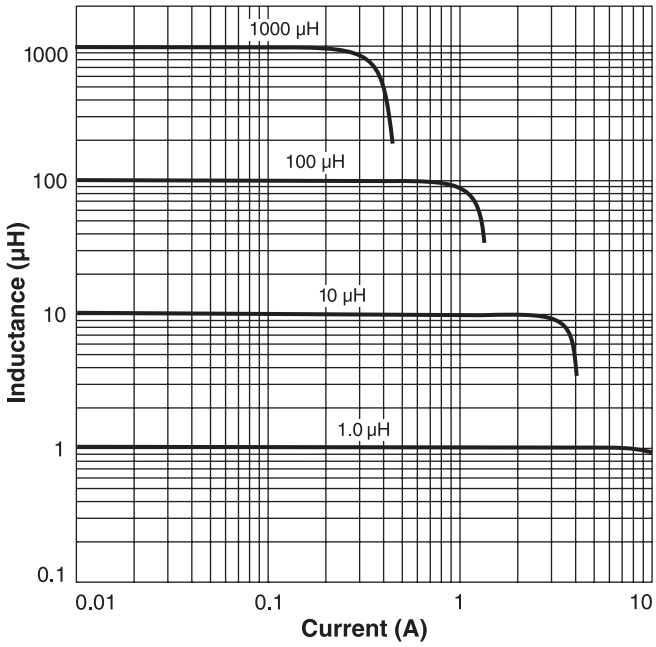

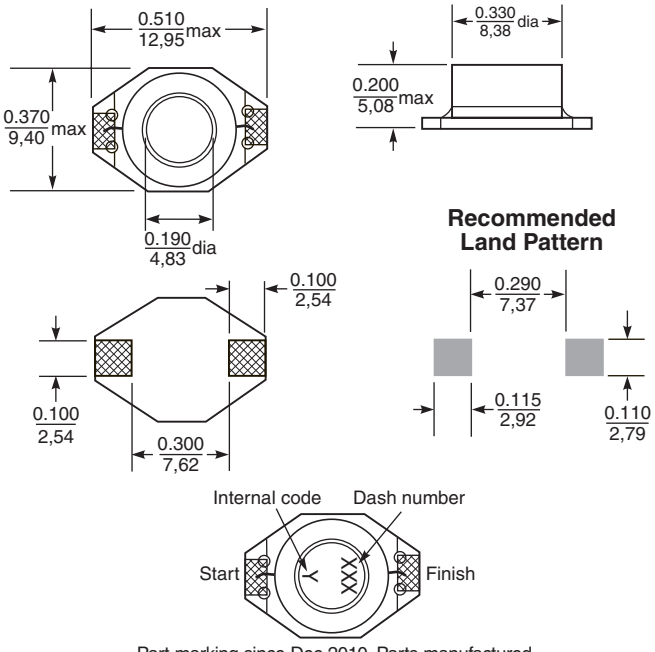

Part marking since Dec 2010. Parts manufactured prior to that date may have color dots. Visit www.coilcraft.com/colrpowr.cfm for color dot marking details.

Weight: 0.86 – 0.98 g
Terminations: Gold over nickel over phos bronze
Tape and reel: 1000/13″ reel Plastic tape: 24 mm wide, 0.33 mm thick, 12 mm pocket spacing, 5.8 mm pocket depth

Coilcraft
www.coilcraft.com

US +1-847-639-6400 sales@coilcraft.com
UK +44-1236-730595 sales@coilcraft-europe.com
Taiwan +886-2-2264 3646 sales@coilcraft.com.tw
China +86-21-6218 8074 sales@coilcraft.com.cn
Singapore + 65-6484 8412 sales@coilcraft.com.sg

© Coilcraft Inc. 2013
This product may not be used in medical or high risk applications without prior Coilcraft approval. Specification subject to change without notice. Please check web site for latest information.