Improved Quad SPST CMOS Analog Switches

DESCRIPTION

The DG441B, DG442B are monolithic quad analog switches designed to provide high speed, low error switching of analog and audio signals. The DG441B, DG442B are upgrades to the original DG441, DG442.

Combing low on-resistance (45 Ω, typ.) with high speed (t_{ON} 120 ns, typ.), the DG441B, DG442B are ideally suited for Data Acquisition, Communication Systems, Automatic Test Equipment, or Medical Instrumentation. Charge injection has been minimized on the drain for use in sample-and-hold circuits.

The DG441B, DG442B are built using Vishay Siliconix's high-voltage silicon-gate process. An epitaxial layer prevents latchup.

When on, each switch conducts equally well in both directions and blocks input voltages to the supply levels when off.

FEATURES

- Low On-Resistance: 45 Ω
- Low Power Consumption: 1 mW
- Fast Switching Action - t_{ON}: 120 ns
- Low Charge Injection - Q: - 1 pC
- TTL/CMOS-Compatible Logic
- Single Supply Capability
- Material categorization: For definitions of compliance please see www.vishay.com/doc?99912

Pb-free
RoHS COMPLIANT
HALOGEN FREE

BENEFITS

- Less Signal Errors and Distortion
- Reduced Power Supply Requirements
- Faster Throughput
- Reduced Pedestal Errors
- Simple Interfacing

APPLICATIONS

- Audio Switching
- Data Acquisition
- Sample-and-Hold Circuits
- Communication Systems
- Automatic Test Equipment
- Medical Instruments

FUNCTIONAL BLOCK DIAGRAM AND PIN CONFIGURATION

DG441B
Dual-In-Line and SOIC

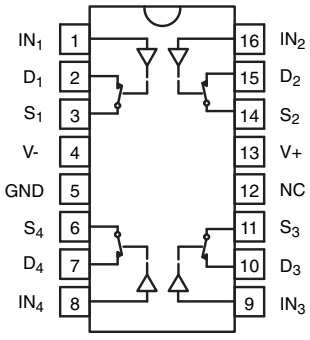

Top View

DG441B
QFN16 (4 x 4 mm)

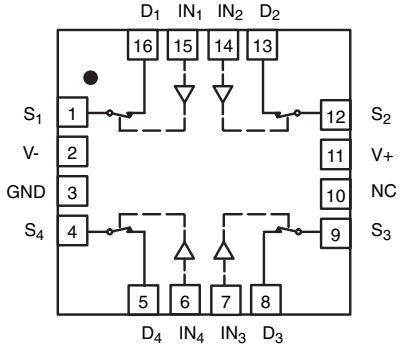

Top View

TRUTH TABLE		
Logic	**DG441B**	**DG442B**
0	ON	OFF
1	OFF	ON

Logic "0" ≤ 0.8 V
Logic "1" ≥ 2.4 V

ORDERING INFORMATION		
Temp Range	**Package**	**Part Number**
- 40 °C to 85 °C	16-pin Plastic DIP	DG441BDJ
		DG441BDJ-E3
		DG442BDJ
		DG442BDJ-E3
	16-pin Narrow SOIC	DG441BDY-E3
		DG441BDY-T1-E3
		DG442BDY-E3
		DG442BDY-T1-E3
	16 pin QFN 4 x 4 mm (Variation 1)	DG441BDN-T1-E4
		DG442BDN-T1-E4

This document is subject to change without notice.
THE PRODUCTS DESCRIBED HEREIN AND THIS DOCUMENT ARE SUBJECT TO SPECIFIC DISCLAIMERS, SET FORTH AT www.vishay.com/doc?91000

ABSOLUTE MAXIMUM RATINGS (T_A = 25 °C, unless otherwise noted)				
Parameter		**Symbol**	**Limit**	**Unit**
V+ to V-			44	V
GND to V-			25	
Digital Inputs[a], V_S, V_D			(V-) - 2 to (V+) + 2 or 30 mA, whichever occurs first	
Continuous Current (Any Terminal)			30	mA
Current, S or D (Pulsed at 1 ms, 10 % duty cycle)			100	
Storage Temperature			- 65 to 125	°C
Power Dissipation (Package)[b]	16-pin Plastic DIP[c]		470	mW
	16-pin Narrow Body SOIC[d]		900	
	QFN-16[d]		850	

Notes:
a. Signals on S_X, D_X, or IN_X exceeding V+ or V- will be clamped by internal diodes. Limit forward diode current to maximum current ratings.
b. All leads welded or soldered to PC Board.
c. Derate 6 mW/°C above 75 °C.
d. Derate 12 mW/°C above 75 °C.

For technical questions, contact: pmostechsupport@vishay.com
Document Number: 72625
S13-1284-Rev. C, 27-May-13
This document is subject to change without notice.
THE PRODUCTS DESCRIBED HEREIN AND THIS DOCUMENT ARE SUBJECT TO SPECIFIC DISCLAIMERS, SET FORTH AT www.vishay.com/doc?91000

SPECIFICATIONS[a] (for dual supplies)							
Parameter	**Symbol**	**Test Conditions Unless Otherwise Specified** V+ = 15 V, V- = - 15 V V_L = 5 V, V_{IN} = 2.4 V, 0.8 V[e]	**Temp.**[b]	**Limits** - 40 °C to 85 °C **Min.**[d]	**Typ.**[c]	**Max.**[d]	**Unit**
Analog Switch							
Analog Signal Range[e]	V_{ANALOG}		Full	- 15		15	V
Drain-Source On-Resistance	$R_{DS(on)}$	I_S = 1 mA, V_D = ± 10 V	Room Full		45	80 95	Ω
On-Resistance Match Between Channels[e]	$\Delta R_{DS(on)}$	I_S = 1 mA, V_D = ± 10 V	Room Full		2	4 5	Ω
Switch Off Leakage Current	$I_{S(off)}$	V_D = ± 14 V, V_S = ± 14 V	Room Full	- 0.5 - 5	± 0.01	0.5 5	nA
	$I_{D(off)}$		Room Full	- 0.5 - 5	± 0.01	0.5 5	nA
Channel On Leakage Current	$I_{D(on)}$	V_S = V_D = ± 14 V	Room Full	- 0.5 - 10	± 0.02	0.5 10	nA
Digital Control							
Input Voltage Low	V_{INL}		Full			0.8	V
Input Voltage High	V_{INH}		Full	2.4			V
Input Current V_{IN} Low	I_{INL}	V_{IN} under test = 0.8 V All Other = 2.4 V	Full	- 1	- 0.01	1	µA
Input Current V_{IN} High	I_{INH}	V_{IN} under test = 2.4 V All Other = 0.8 V	Full	- 1	0.01	1	µA
Dynamic Characteristics							
Turn-On Time	t_{ON}	R_L = 1 kΩ, C_L = 35 pF V_S = 10 V, See Figure 2	Room		120	220	ns
Turn-Off Time	t_{OFF}		Room		65	120	ns
Charge Injection[e]	Q	C_L = 1 nF, V_S = 0 V V_{gen} = 0 V, R_{gen} = 0 Ω	Room		- 1		pC
Off Isolation[e]	OIRR	R_L = 50 Ω , C_L = 15 pF V_S = 1 V_{RMS}, f = 100 kHz	Room		- 90		dB
Crosstalk (Channel-to-Channel)	X_{TALK}		Room		- 95		dB
SourceOff Capacitance[e]	$C_{S(off)}$	f = 1 MHz	Room		4		pF
Drain Off Capacitance[e]	$C_{D(off)}$		Room		4		pF
Channel On Capacitance[e]	$C_{D(on)}$	V_S = V_D = 0 V, f = 1 MHz	Room		16		pF
Power Supplies							
Positive Supply Current	I+	V+ = 16.5 V, V- = - 16.5 V V_{IN} = 0 or 5 V	Room Full			1 5	µA
Negative Supply Current	I-		Room Full	- 1 - 5			µA

This document is subject to change without notice.
THE PRODUCTS DESCRIBED HEREIN AND THIS DOCUMENT ARE SUBJECT TO SPECIFIC DISCLAIMERS, SET FORTH AT www.vishay.com/doc?91000

SPECIFICATIONS (for single supply)

Parameter	Symbol	Test Conditions Unless Otherwise Specified V+ = 12 V, V- = 0 V V_{IN} = 2.4 V, 0.8 V[e]	Temp.[b]	Limits - 40 °C to 85 °C Min.[d]	Typ.[c]	Max.[d]	Unit
Analog Switch							
Analog Signal Range[e]	V_{ANALOG}		Full	0		12	V
Drain-Source On-Resistance	$R_{DS(on)}$	I_S = 1 mA, V_D = 3 V, 8 V	Room Full		90	160 200	Ω
Dynamic Characteristics							
Turn-On Time	t_{ON}	R_L = 1 kΩ, C_L = 35 pF, V_S = 8 V See Figure 2	Room		120	300	ns
Turn-Off Time	t_{OFF}		Room		60	200	
Charge Injection	Q	C_L = 1 nF, V_{gen} = 6 V, R_{gen} = 0 Ω	Room		4		pC
Power Supplies							
Positive Supply Current	I+	V_{IN} = 0 V or 5 V	Room Full			1 5	µA
Negative Supply Current	I-		Room Full	- 1 - 5			

Notes:
a. Refer to PROCESS OPTION FLOWCHART.
b. Room = 25 °C, Full = as determined by the operating temperature suffix.
c. Typical values are for DESIGN AID ONLY, not guaranteed nor subject to production testing.
d. The algebraic convention whereby the most negative value is a minimum and the most positive a maximum, is used in this data sheet.
e. Guaranteed by design, not subject to production test.
f. V_{IN} = input voltage to perform proper function.

Stresses beyond those listed under "Absolute Maximum Ratings" may cause permanent damage to the device. These are stress ratings only, and functional operation of the device at these or any other conditions beyond those indicated in the operational sections of the specifications is not implied. Exposure to absolute maximum rating conditions for extended periods may affect device reliability.

SCHEMATIC DIAGRAM (typical channel)

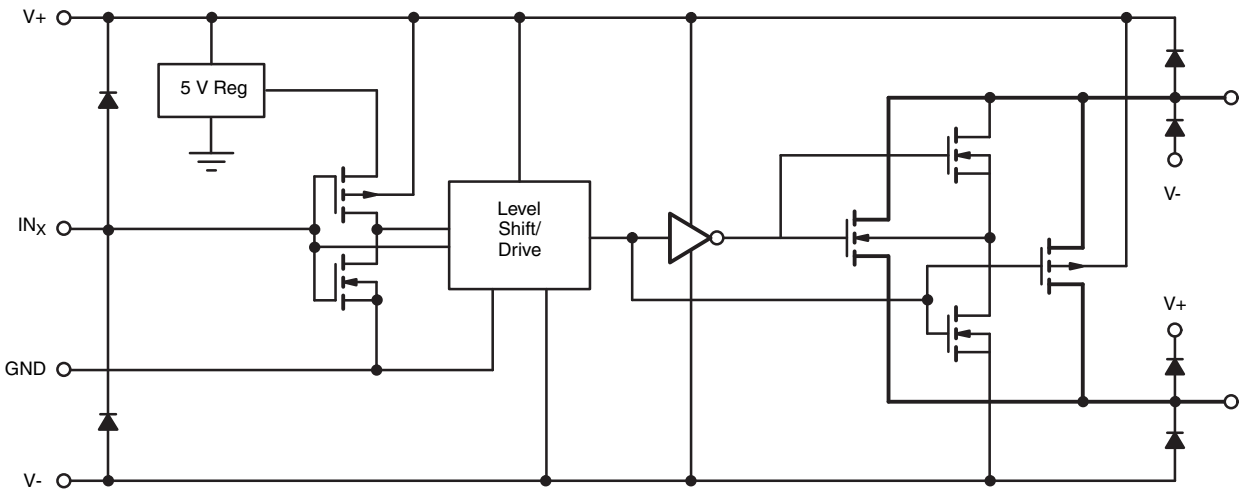

Figure 1.

For technical questions, contact: pmostechsupport@vishay.com

This document is subject to change without notice.
THE PRODUCTS DESCRIBED HEREIN AND THIS DOCUMENT ARE SUBJECT TO SPECIFIC DISCLAIMERS, SET FORTH AT www.vishay.com/doc?91000

TYPICAL CHARACTERISTICS (T_A = 25 °C, unless otherwise noted)

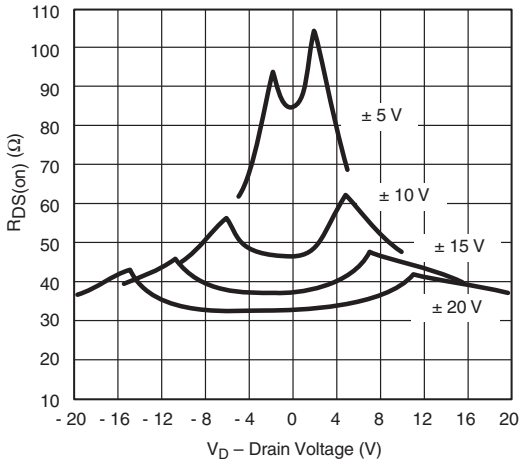

$R_{DS(on)}$ vs. V_D and Power Supply Voltages

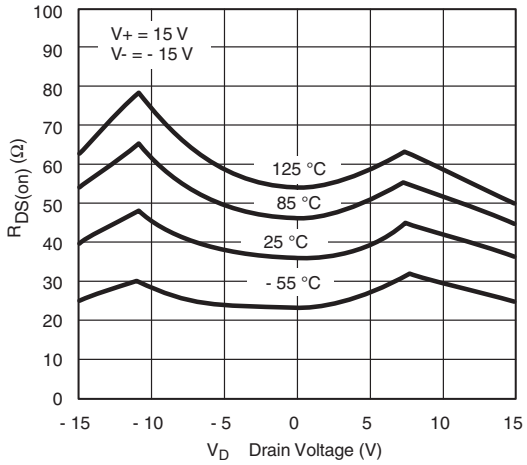

$R_{DS(on)}$ vs. V_D and Temperature

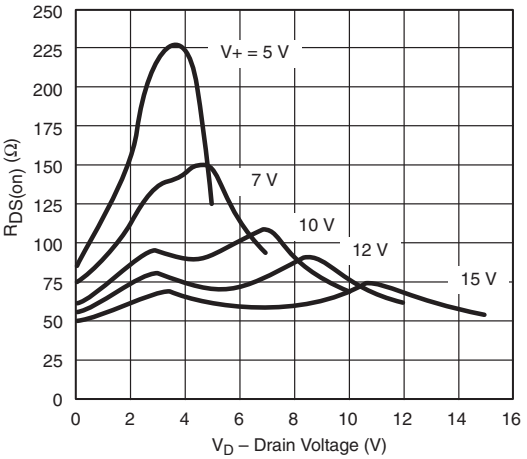

$R_{DS(on)}$ vs. V_D and Single Power Supply Voltages

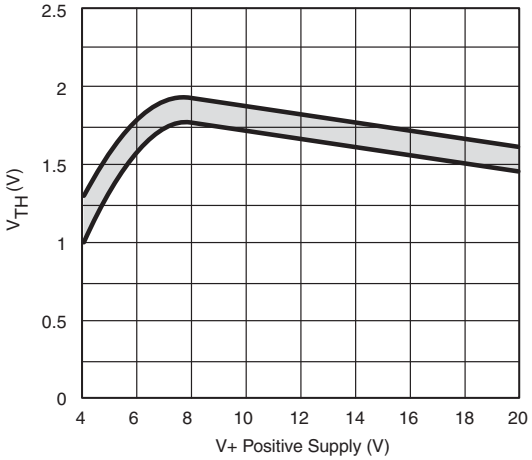

Input Switching Threshold vs. Supply Voltage

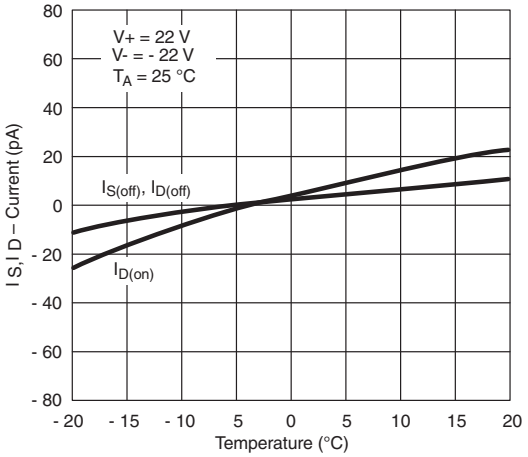

Leakage Currents vs. Analog Voltage

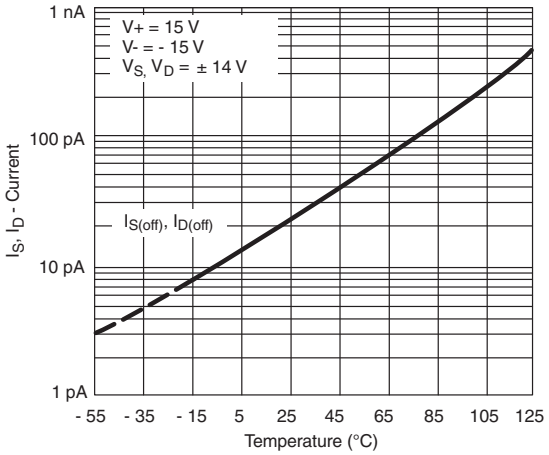

Leakage Currents vs. Temperature

This document is subject to change without notice.
THE PRODUCTS DESCRIBED HEREIN AND THIS DOCUMENT ARE SUBJECT TO SPECIFIC DISCLAIMERS, SET FORTH AT www.vishay.com/doc?91000

TYPICAL CHARACTERISTICS (T_A = 25 °C, unless otherwise noted)

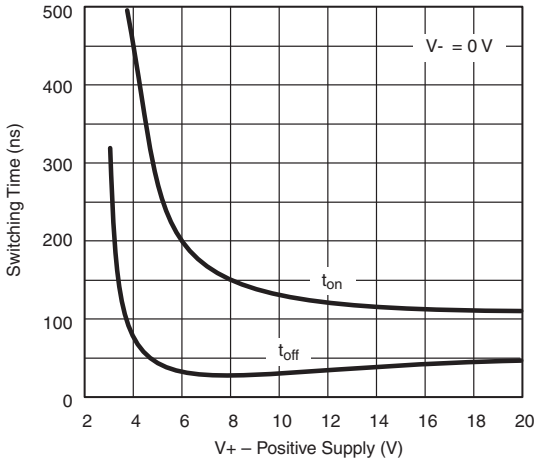

Switching Time vs. Single Supply Voltage

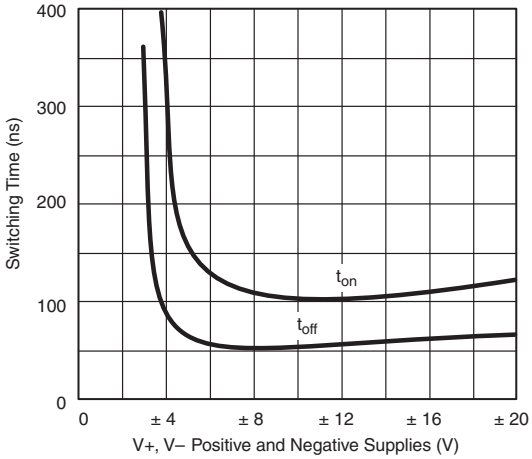

Switching Times vs. Power Supply Voltage

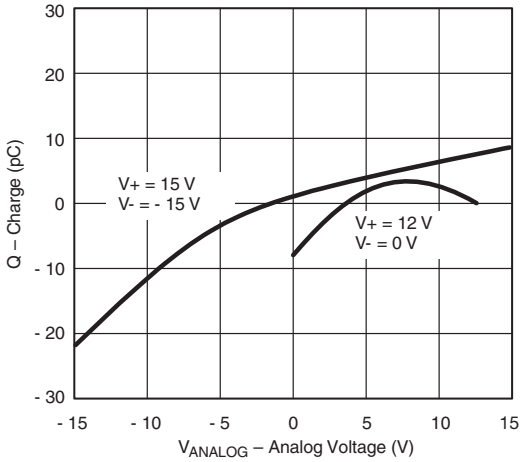

Q_S, Q_D - Charge Injection vs. Analog Voltage

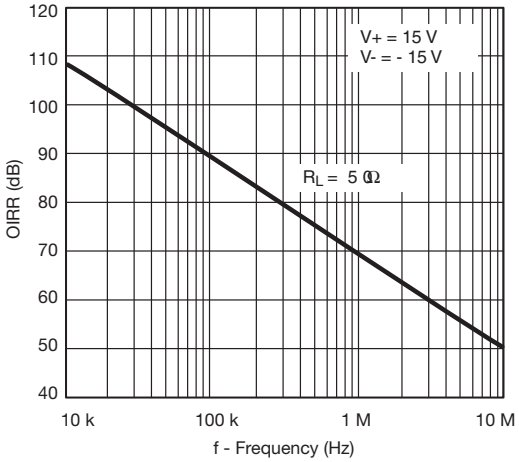

Off Isolation vs. Frequency

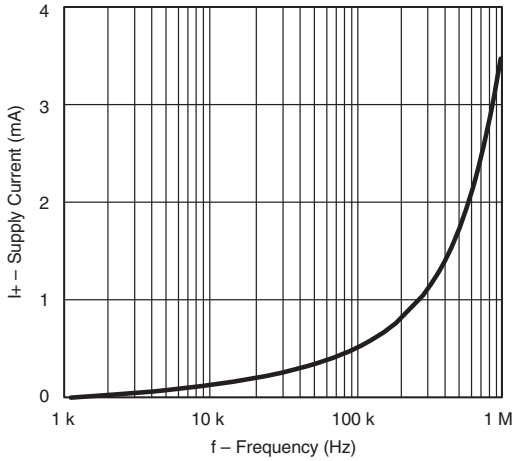

Supply Current vs. Switching Frequency

This document is subject to change without notice.
THE PRODUCTS DESCRIBED HEREIN AND THIS DOCUMENT ARE SUBJECT TO SPECIFIC DISCLAIMERS, SET FORTH AT www.vishay.com/doc?91000

TEST CIRCUITS

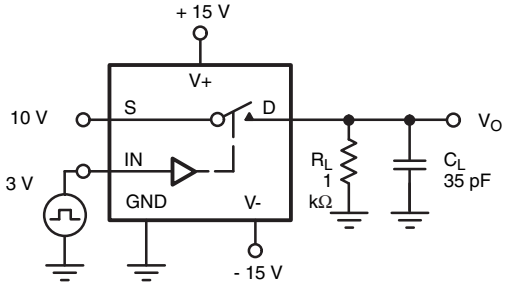

C_L (includes fixture and stray capacitance)

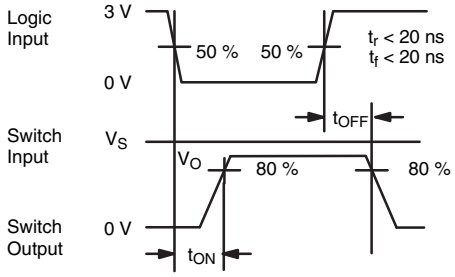

Note: Logic input waveform is inverted for DG442.

Figure 2. Switching Time

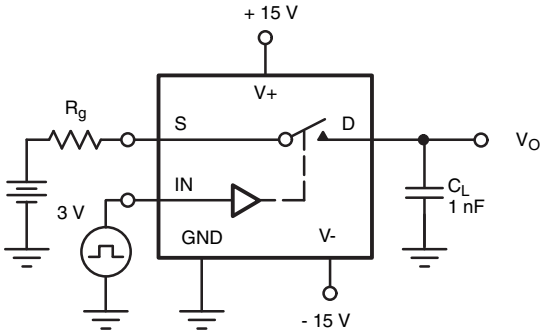

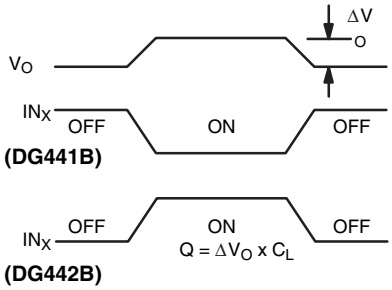

Figure 3. Charge Injection

C = 1 mF tantalum in parallel with 0.01 mF ceramic

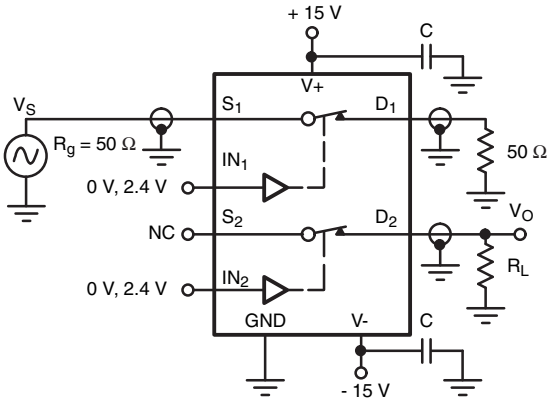

X_{TALK} Isolation = 20 log $\left|\frac{V_S}{V_O}\right|$

C = RF bypass

Figure 4. Crosstalk

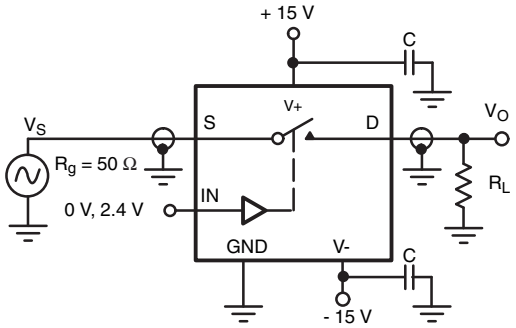

Off Isolation = 20 log $\left|\frac{V_S}{V_O}\right|$

Figure 5. Off Isolation

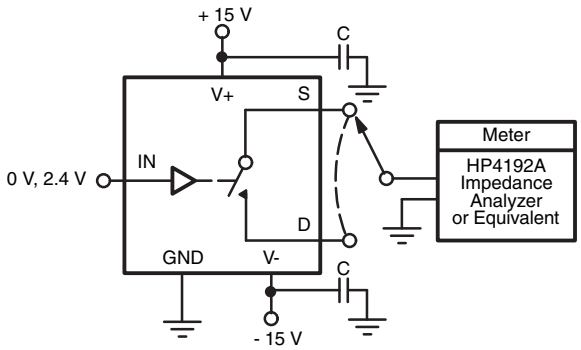

Figure 6. Source/Drain Capacitances

This document is subject to change without notice.
THE PRODUCTS DESCRIBED HEREIN AND THIS DOCUMENT ARE SUBJECT TO SPECIFIC DISCLAIMERS, SET FORTH AT www.vishay.com/doc?91000

APPLICATIONS

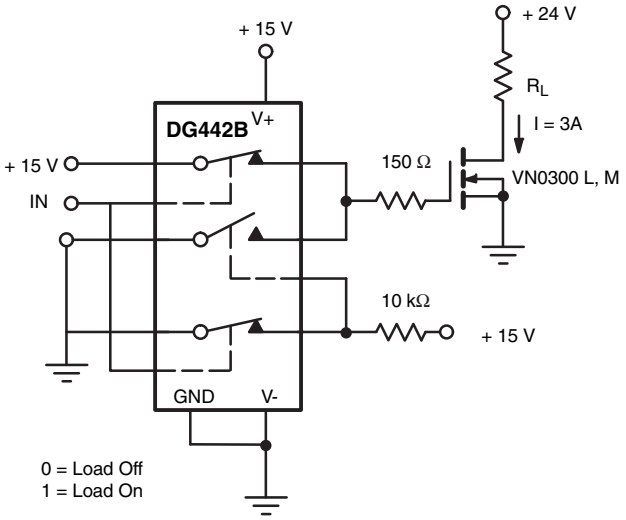

Figure 7. Power MOSFET Driver

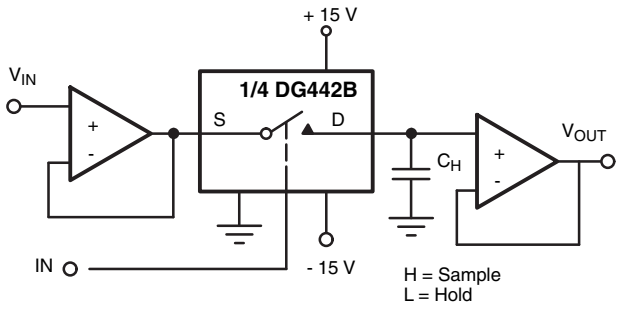

Figure 8. Open Loop Sample-and-Hold

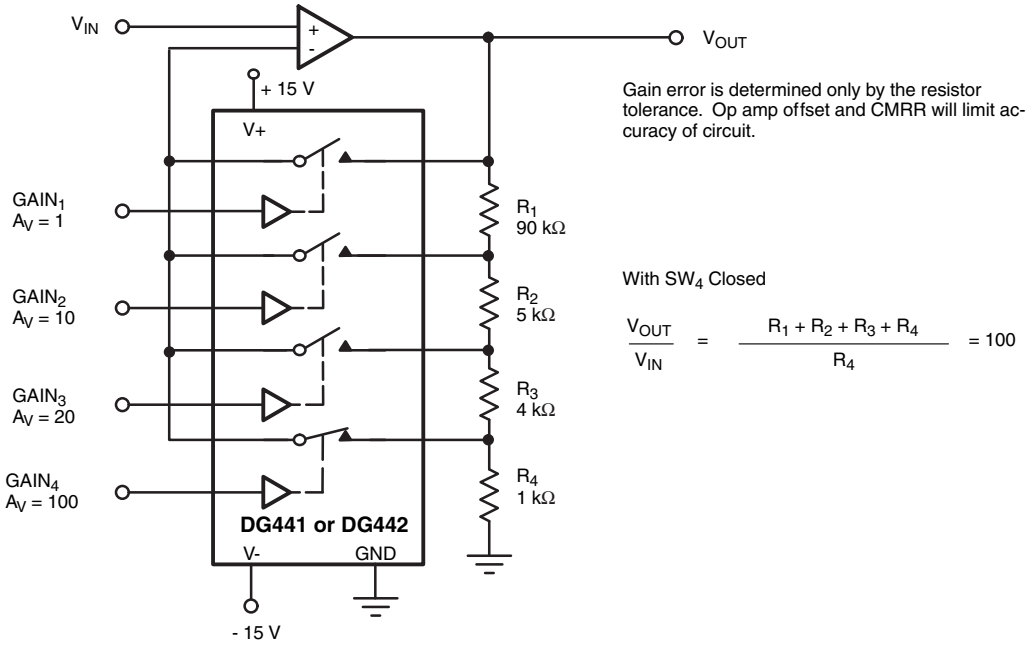

Figure 9. Precision-Weighted Resistor Programmable-Gain Amplifier

Vishay Siliconix maintains worldwide manufacturing capability. Products may be manufactured at one of several qualified locations. Reliability data for Silicon Technology and Package Reliability represent a composite of all qualified locations. For related documents such as package/tape drawings, part marking, and reliability data, see www.vishay.com/ppg?72625.

This document is subject to change without notice.
THE PRODUCTS DESCRIBED HEREIN AND THIS DOCUMENT ARE SUBJECT TO SPECIFIC DISCLAIMERS, SET FORTH AT www.vishay.com/doc?91000

SOIC (NARROW): 16-LEAD

JEDEC Part Number: MS-012

Dim	MILLIMETERS		INCHES	
	Min	Max	Min	Max
A	1.35	1.75	0.053	0.069
A_1	0.10	0.20	0.004	0.008
B	0.38	0.51	0.015	0.020
C	0.18	0.23	0.007	0.009
D	9.80	10.00	0.385	0.393
E	3.80	4.00	0.149	0.157
e	1.27 BSC		0.050 BSC	
H	5.80	6.20	0.228	0.244
L	0.50	0.93	0.020	0.037
⊘	0°	8°	0°	8°

ECN: S-03946—Rev. F, 09-Jul-01
DWG: 5300

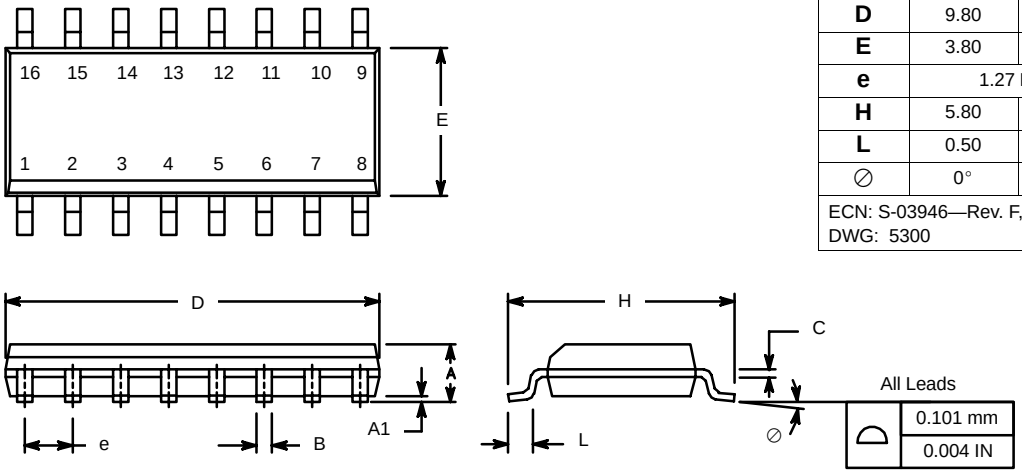

PDIP: 16-LEAD

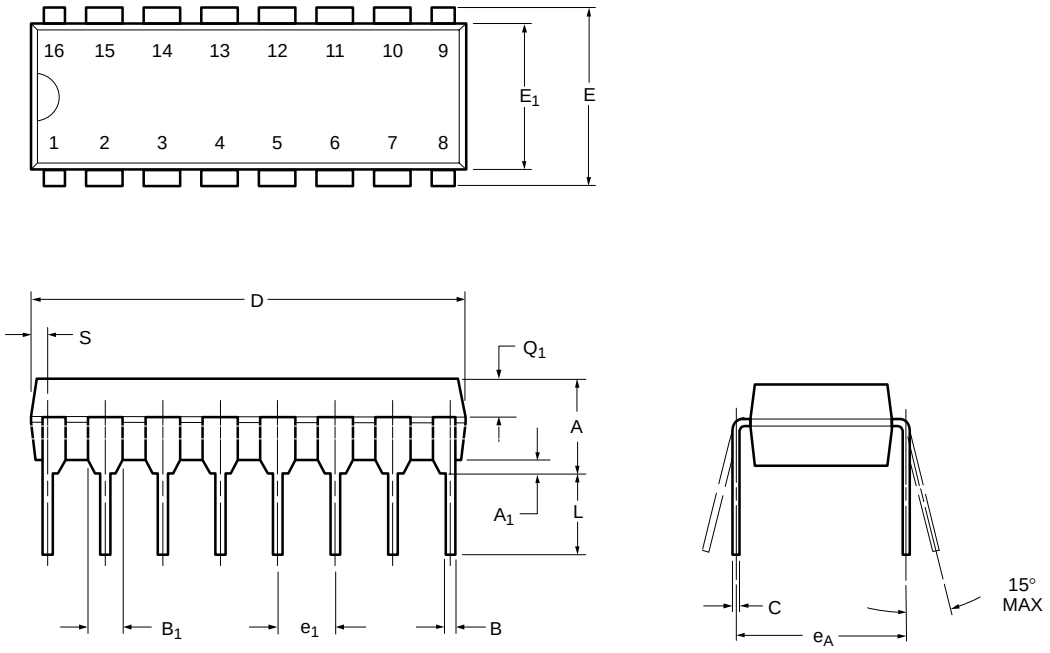

Dim	MILLIMETERS		INCHES	
	Min	Max	Min	Max
A	3.81	5.08	0.150	0.200
A_1	0.38	1.27	0.015	0.050
B	0.38	0.51	0.015	0.020
B_1	0.89	1.65	0.035	0.065
C	0.20	0.30	0.008	0.012
D	18.93	21.33	0.745	0.840
E	7.62	8.26	0.300	0.325
E_1	5.59	7.11	0.220	0.280
e_1	2.29	2.79	0.090	0.110
e_A	7.37	7.87	0.290	0.310
L	2.79	3.81	0.110	0.150
Q_1	1.27	2.03	0.050	0.080
S	0.38	1.52	.015	0.060
ECN: S-03946—Rev. D, 09-Jul-01 DWG: 5482				

QFN 4x4-16L Case Outline

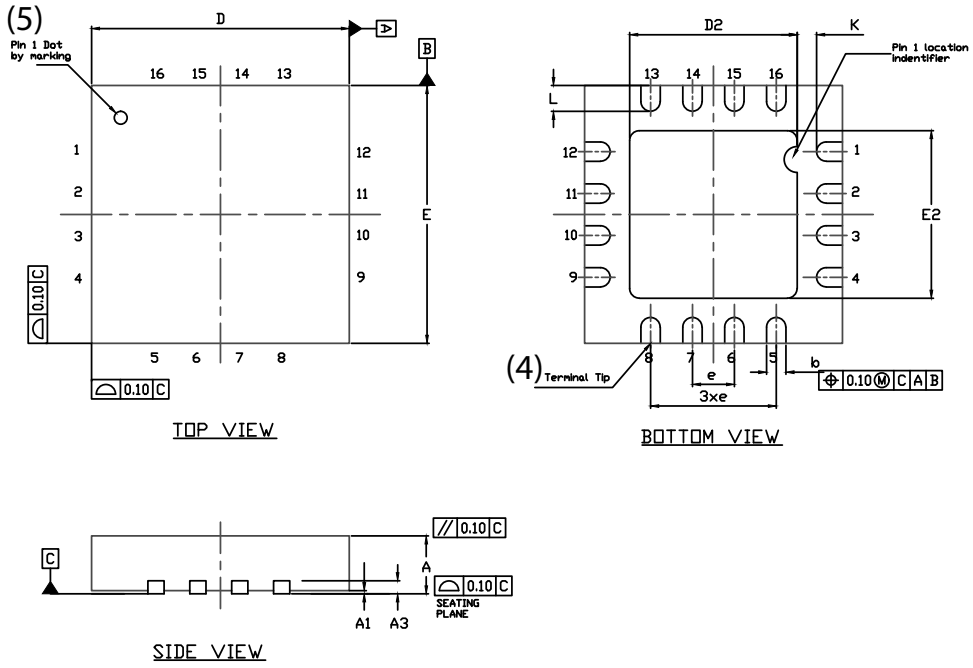

DIM	VARIATION 1						VARIATION 2					
	MILLIMETERS[1]			INCHES			MILLIMETERS[1]			INCHES		
	MIN.	NOM.	MAX.	MIN.	NOM.	MAX.	MIN.	NOM.	MAX.	MIN.	NOM.	MAX.
A	0.75	0.85	0.95	0.029	0.033	0.037	0.75	0.85	0.95	0.029	0.033	0.037
A1	0	-	0.05	0	-	0.002	0	-	0.05	0	-	0.002
A3	0.20 ref.			0.008 ref.			0.20 ref.			0.008 ref.		
b	0.25	0.30	0.35	0.010	0.012	0.014	0.25	0.30	0.35	0.010	0.012	0.014
D	4.00 BSC			0.157 BSC			4.00 BSC			0.157 BSC		
D2	2.0	2.1	2.2	0.079	0.083	0.087	2.5	2.6	2.7	0.098	0.102	0.106
e	0.65 BSC			0.026 BSC			0.65 BSC			0.026 BSC		
E	4.00 BSC			0.157 BSC			4.00 BSC			0.157 BSC		
E2	2.0	2.1	2.2	0.079	0.083	0.087	2.5	2.6	2.7	0.098	0.102	0.106
K	0.20 min.			0.008 min.			0.20 min.			0.008 min.		
L	0.5	0.6	0.7	0.020	0.024	0.028	0.3	0.4	0.5	0.012	0.016	0.020
N[3]	16			16			16			16		
Nd[3]	4			4			4			4		
Ne[3]	4			4			4			4		

Notes

(1) Use millimeters as the primary measurement.
(2) Dimensioning and tolerances conform to ASME Y14.5M. - 1994.
(3) N is the number of terminals. Nd and Ne is the number of terminals in each D and E site respectively.
(4) Dimensions b applies to plated terminal and is measured between 0.15 mm and 0.30 mm from terminal tip.
(5) The pin 1 identifier must be existed on the top surface of the package by using identification mark or other feature of package body.
(6) Package warpage max. 0.05 mm.

ECN: S13-0893-Rev. B, 22-Apr-13
DWG: 5890

For technical questions, contact: powerictechsupport@vishay.com

THIS DOCUMENT IS SUBJECT TO CHANGE WITHOUT NOTICE. THE PRODUCTS DESCRIBED HEREIN AND THIS DOCUMENT ARE SUBJECT TO SPECIFIC DISCLAIMERS, SET FORTH AT www.vishay.com/doc?91000

RECOMMENDED MINIMUM PADS FOR SO-16

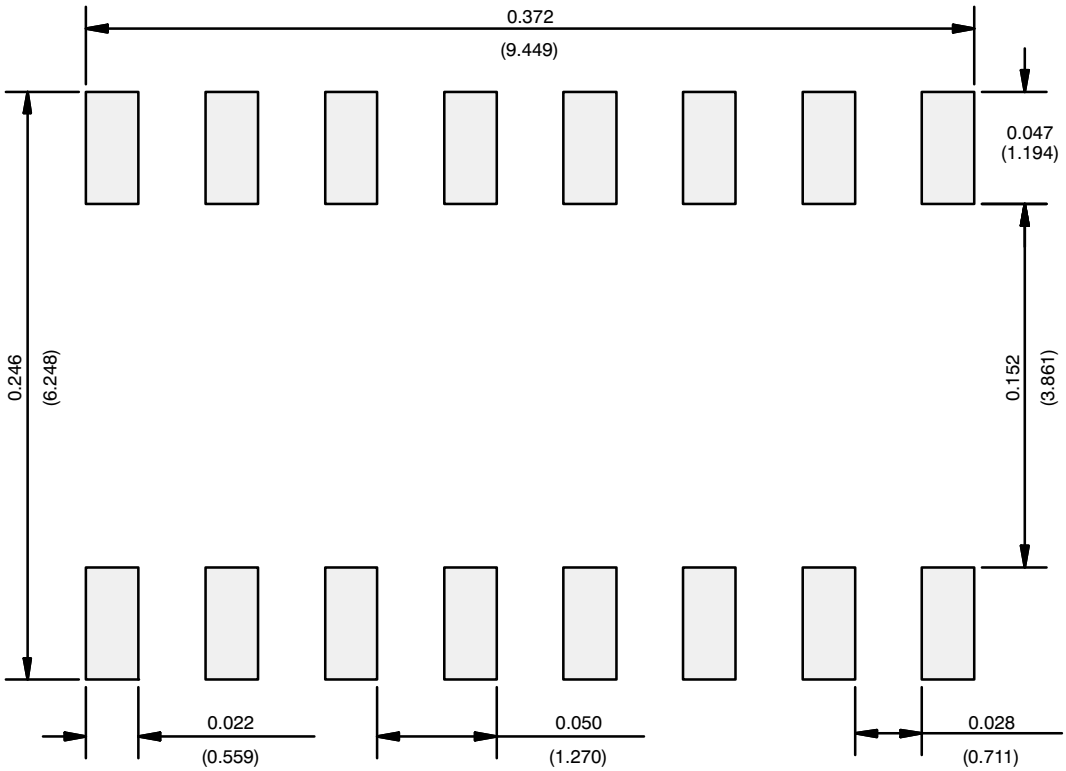

Recommended Minimum Pads
Dimensions in Inches/(mm)

Return to Index

Disclaimer

ALL PRODUCT, PRODUCT SPECIFICATIONS AND DATA ARE SUBJECT TO CHANGE WITHOUT NOTICE TO IMPROVE RELIABILITY, FUNCTION OR DESIGN OR OTHERWISE.

Vishay Intertechnology, Inc., its affiliates, agents, and employees, and all persons acting on its or their behalf (collectively, “Vishay”), disclaim any and all liability for any errors, inaccuracies or incompleteness contained in any datasheet or in any other disclosure relating to any product.

Vishay makes no warranty, representation or guarantee regarding the suitability of the products for any particular purpose or the continuing production of any product. To the maximum extent permitted by applicable law, Vishay disclaims (i) any and all liability arising out of the application or use of any product, (ii) any and all liability, including without limitation special, consequential or incidental damages, and (iii) any and all implied warranties, including warranties of fitness for particular purpose, non-infringement and merchantability.

Statements regarding the suitability of products for certain types of applications are based on Vishay’s knowledge of typical requirements that are often placed on Vishay products in generic applications. Such statements are not binding statements about the suitability of products for a particular application. It is the customer’s responsibility to validate that a particular product with the properties described in the product specification is suitable for use in a particular application. Parameters provided in datasheets and / or specifications may vary in different applications and performance may vary over time. All operating parameters, including typical parameters, must be validated for each customer application by the customer’s technical experts. Product specifications do not expand or otherwise modify Vishay’s terms and conditions of purchase, including but not limited to the warranty expressed therein.

Except as expressly indicated in writing, Vishay products are not designed for use in medical, life-saving, or life-sustaining applications or for any other application in which the failure of the Vishay product could result in personal injury or death. Customers using or selling Vishay products not expressly indicated for use in such applications do so at their own risk. Please contact authorized Vishay personnel to obtain written terms and conditions regarding products designed for such applications.

No license, express or implied, by estoppel or otherwise, to any intellectual property rights is granted by this document or by any conduct of Vishay. Product names and markings noted herein may be trademarks of their respective owners.

© 2017 VISHAY INTERTECHNOLOGY, INC. ALL RIGHTS RESERVED