0.25 Ω Low-Voltage Dual SPDT Analog Switch

DESCRIPTION

The DG3535, DG3536 is a sub 1 Ω (0.25 Ω at 2.7 V) dual SPDT analog switches designed for low voltage applications.

The DG3535, DG3536 has on-resistance matching (less than 0.05 Ω at 2.7 V) and flatness (less than 0.2 Ω at 2.7 V) that are guaranteed over the entire voltage range. Additionally, low logic thresholds makes the DG3535, DG3536 an ideal interface to low voltage DSP control signals.

The DG3535, DG3536 has fast switching speed with break-before-make guaranteed. In the On condition, all switching elements conduct equally in both directions. Off-isolation and crosstalk is - 69 dB at 100 kHz.

The DG3535, DG3536 is built on Vishay Siliconix's high-density low voltage CMOS process. An eptiaxial layer is built in to prevent latchup. The DG3535, DG3536 contains the additional benefit of 2000 V ESD protection.

As a committed partner to the community and the environment, Vishay Siliconix manufactures this product with the lead (Pb)-free device terminations. For MICRO FOOT analog switching products manufactured with tin/silver/copper (SnAgCu) device terminations, the lead (Pb)-free "-E1" suffix is being used as a designator.

FEATURES

- Low voltage operation
- Low on-resistance - R_{ON}: 0.25 Ω at 2.7 V
- - 69 dB OIRR at 2.7 V, 100 kHz
- MICRO FOOT® package
- ESD protection > 2000 V

Pb-free
RoHS COMPLIANT

BENEFITS

- Reduced power consumption
- High accuracy
- Reduce board space
- 1.6 V logic compatible
- High bandwidth

APPLICATIONS

- Cellular phones
- Speaker headset switching
- Audio and video signal routing
- PCMCIA cards
- Battery operated systems
- Relay replacement

FUNCTIONAL BLOCK DIAGRAM AND PIN CONFIGURATION

DG3535, DG3536
MICRO FOOT 10-Bump

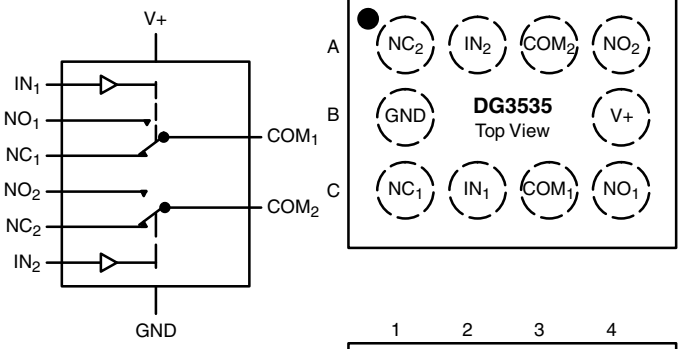

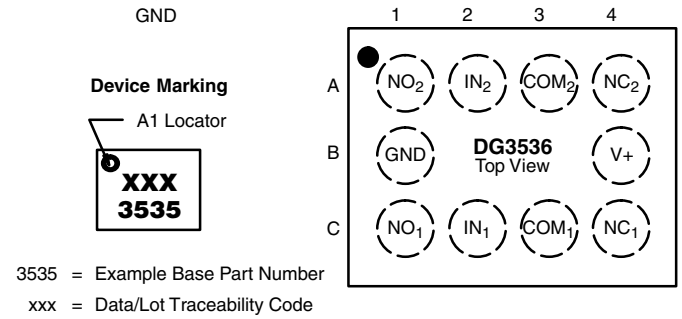

Device Marking

3535 = Example Base Part Number
xxx = Data/Lot Traceability Code

TRUTH TABLE

Logic	NC1 and NC2	NO1 and NO2
0	ON	OFF
1	OFF	ON

ORDERING INFORMATION

Temp. Range	Package	Part Number
- 40 °C to 85 °C	MICRO FOOT: 10 Bump (4 x 3, 0.5 mm Pitch, 238 µm Bump Height)	DG3535DB-T5-E1 DG3535DB-T1-E1 DG3536DB-T5-E1

ABSOLUTE MAXIMUM RATINGS

Parameter		Limit	Unit
Reference V+ to GND		- 0.3 to + 6	V
IN, COM, NC, NO[a]		- 0.3 to (V+ + 0.3 V)	
Continuous Current (NO, NC, COM)		± 300	mA
Peak Current (Pulsed at 1 ms, 10 % duty cycle)		± 500	
Storage Temperature	(D Suffix)	- 65 to 150	°C
Package Solder Reflow Conditions[b]	IR/Convection	250	
ESD per Method 3015.7		> 2	kV
Power Dissipation (Packages)[c]	MICRO FOOT: 10 Bump (4 x 3 mm)[d]	457	mW

Notes:
a Signals on NC, NO, or COM or IN exceeding V+ will be clamped by internal diodes. Limit forward diode current to maximum current ratings.
b Refer to IPC/JEDEC (J-STD-020B)
c All bumps welded or soldered to PC board.
d Derate 5.7 mW/°C above 70 °C.

Stresses beyond those listed under "Absolute Maximum Ratings" may cause permanent damage to the device. These are stress ratings only, and functional operation of the device at these or any other conditions beyond those indicated in the operational sections of the specifications is not implied. Exposure to absolute maximum rating conditions for extended periods may affect device reliability.

SPECIFICATIONS (V+ = 3.0 V)

Parameter	Symbol	Test Conditions Otherwise Unless Specified V+ = 3 V, ± 10 %, V_{IN} = 0.5 V or 1.4 V[e]	Temp.[a]	Limits - 40 to 85 °C Min.[b]	Typ.[c]	Max.[b]	Unit
Analog Switch							
Analog Signal Range[d]	V_{NO}, V_{NC}, V_{COM}		Full	0		V+	V
On-Resistance[d]	R_{ON}	V+ = 2.7 V, V_{COM} = 0.6/1.5 V, I_{NO}, I_{NC} = 100 mA	Room Full		0.25	0.4 0.5	Ω
R_{ON} Flatness[d]	R_{ON} Flatness		Room			0.15	
On-Resistance Match Between Channels[d]	$\Delta R_{DS(on)}$		Room			0.05	
Switch Off Leakage Current	$I_{NO(off)}$ $I_{NC(off)}$	V+ = 3.3 V, V_{NO}, V_{NC} = 0.3 V/3 V, V_{COM} = 3 V/0.3 V	Room Full	- 2 - 20		2 20	nA
	$I_{COM(off)}$		Room Full	- 2 - 20		2 20	
Channel-On Leakage Current	$I_{COM(on)}$	V+ = 3.3 V, V_{NO}, V_{NC} = V_{COM} = 0.3 V/3 V	Room Full	- 2 - 20		2 20	
Digital Control							
Input High Voltage[d]	V_{INH}		Full	1.4			V
Input Low Voltage	V_{INL}		Full			0.5	
Input Capacitance	C_{in}		Full		10		pF
Input Current	I_{INL} or I_{INH}	V_{IN} = 0 or V+	Full	1		1	µA

SPECIFICATIONS (V+ = 3.0 V)							
Parameter	**Symbol**	**Test Conditions Otherwise Unless Specified** V+ = 3 V, ± 10 %, V_{IN} = 0.5 V or 1.4 V[e]	**Temp.[a]**	**Limits - 40 °C to 85 °C Min.[b]**	**Typ.[c]**	**Max.[b]**	**Unit**
Dynamic Characteristics							
Turn-On Time	t_{ON}	V_{NO} or V_{NC} = 2.0 V, R_L = 50 Ω, C_L = 35 pF	Room Full		52	82 90	ns
Turn-Off Time	t_{OFF}		Room Full		43	73 78	
Break-Before-Make Time	t_d		Room	1	6		
Charge Injection[d]	Q_{INJ}	C_L = 1 nF, V_{GEN} = 1.5 V, R_{GEN} = 0 Ω	Full		21		pC
Off-Isolation[d]	OIRR	R_L = 50 Ω, C_L = 5 pF, f = 100 kHz	Room		- 69		dB
Crosstalk[d]	X_{TALK}		Room		- 69		
N_O, N_C Off Capacitance[d]	$C_{NO(off)}$	V_{IN} = 0 or V+, f = 1 MHz	Room		145		pF
	$C_{NC(off)}$		Room		145		
Channel-On Capacitance[d]	$C_{NO(on)}$		Room		406		
	$C_{NC(on)}$		Room		406		
Power Supply							
Power Supply Current	I+	V_{IN} = 0 or V+	Room Full		0.001	1.0 1.0	µA

Notes:
a. Room = 25 °C, Full = as determined by the operating suffix.
b. Typical values are for design aid only, not guaranteed nor subject to production testing.
c. The algebraic convention whereby the most negative value is a minimum and the most positive a maximum, is used in this data sheet.
d. Guarantee by design, nor subjected to production test.
e. V_{IN} = input voltage to perform proper function.

TYPICAL CHARACTERISTICS (25 °C, unless otherwise noted)

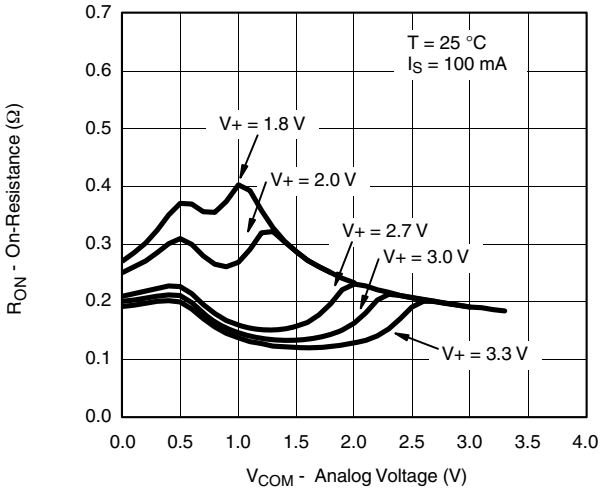

R_{ON} vs. V_{COM} and Supply Voltage

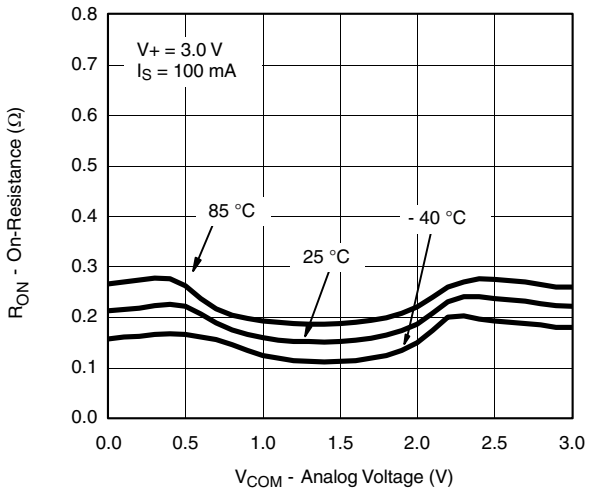

R_{ON} vs. Analog Voltage and Temperature (NC1)

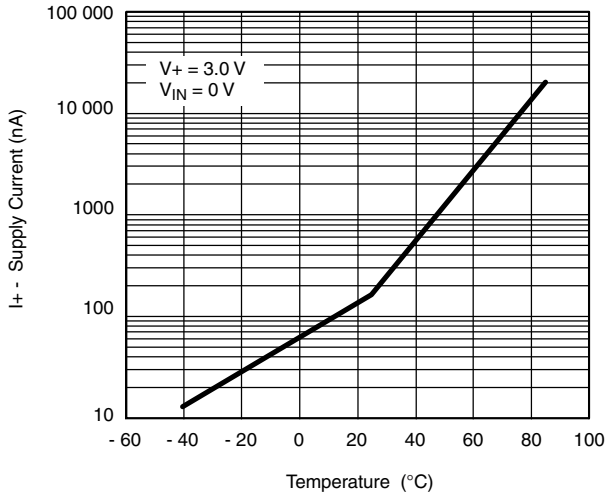

Supply Current vs. Temperature

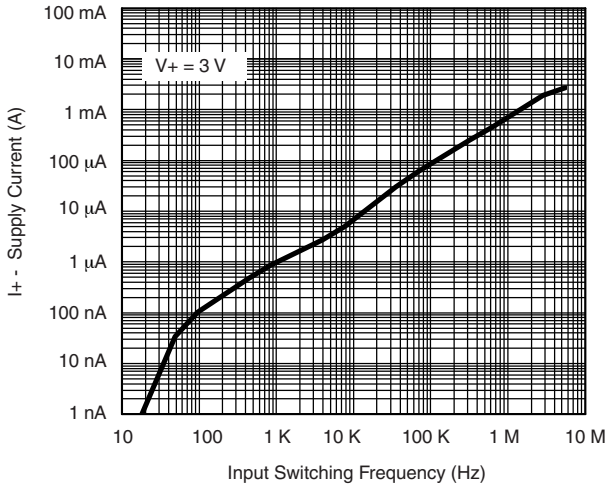

Supply Current vs. Input Switching Frequency

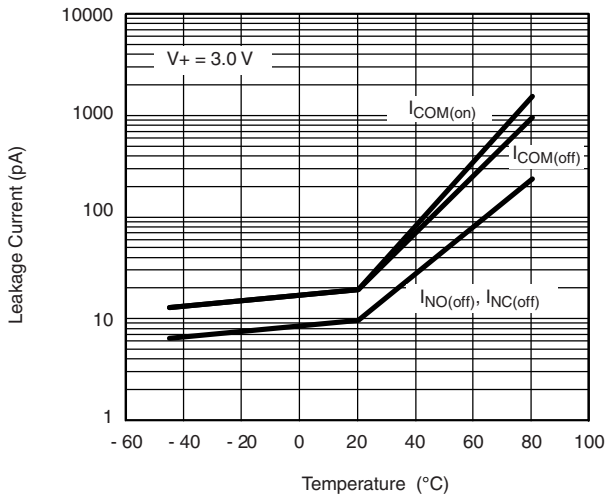

Leakage Current vs. Temperature

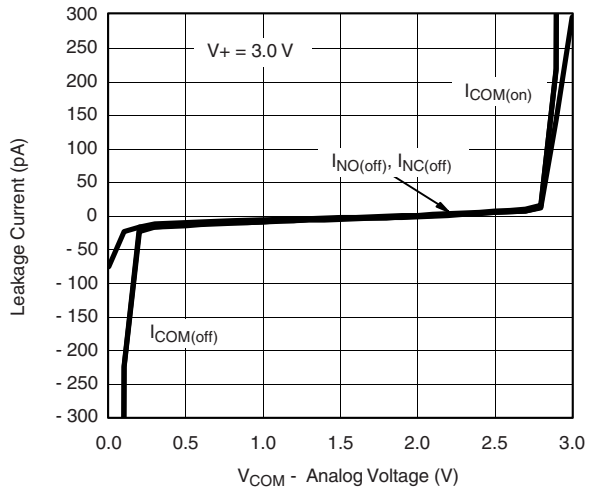

Leakage vs. Analog Voltage

TYPICAL CHARACTERISTICS (25 °C, unless otherwise noted)

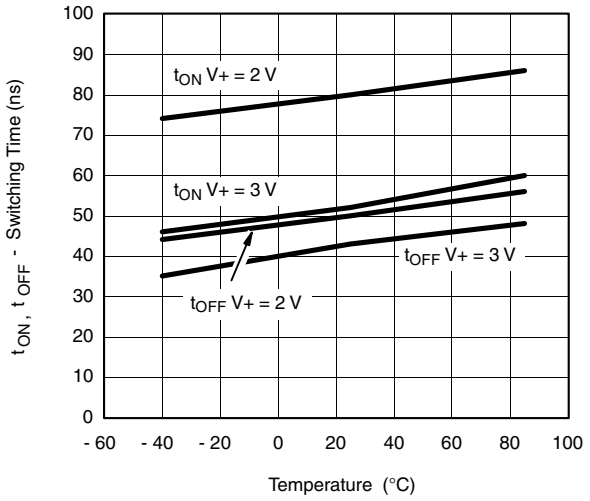

Switching Time vs. Temperature

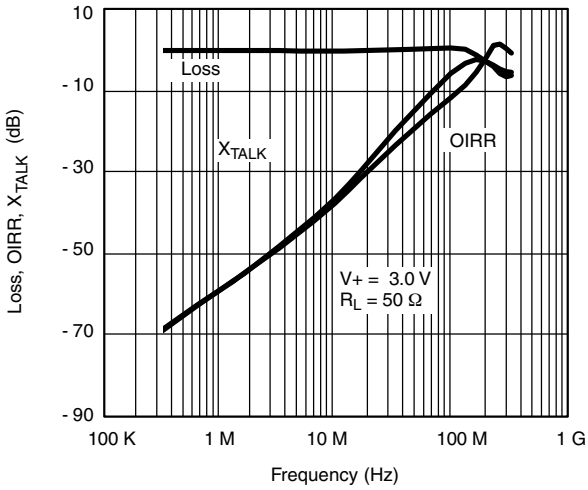

Insertion Loss, Off-Isolation Crosstalk vs. Frequency

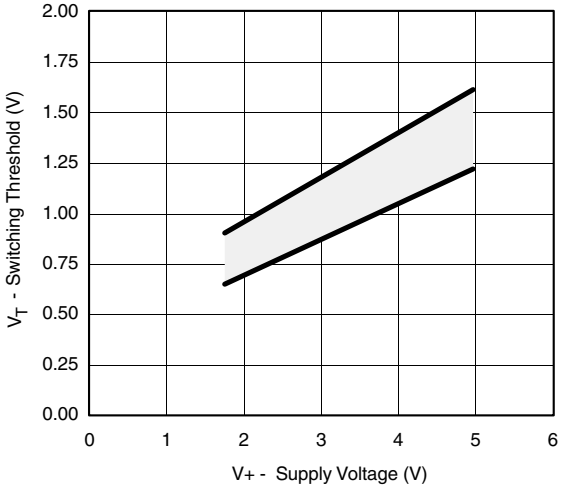

Switching Threshold vs. Supply Voltage

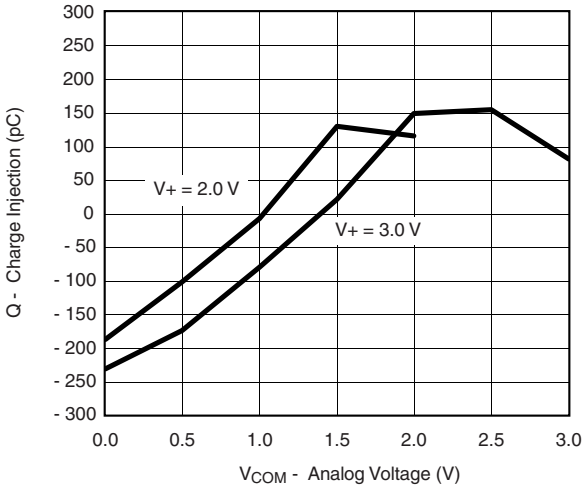

Charge Injection vs. Analog Voltage

TEST CIRCUITS

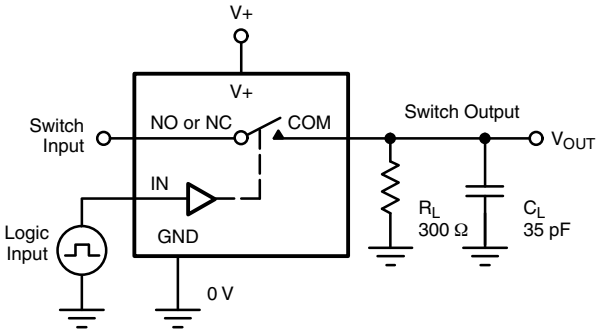

C_L (includes fixture and stray capacitance)

$$V_{OUT} = V_{COM}\left(\frac{R_L}{R_L + R_{ON}}\right)$$

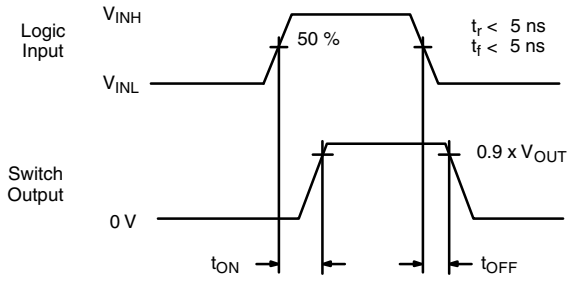

Logic "1" = Switch On
Logic input waveforms inverted for switches that have the opposite logic sense.

Figure 1. Switching Time

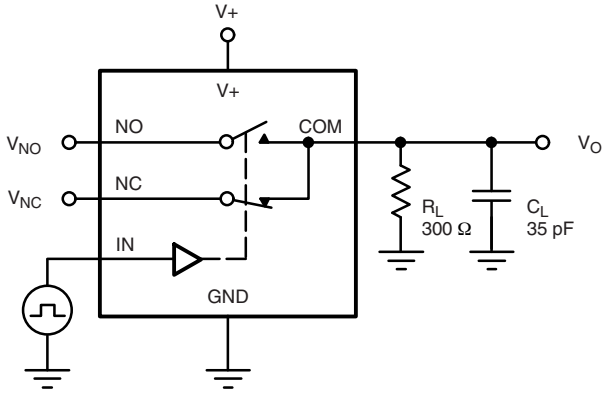

C_L (includes fixture and stray capacitance)

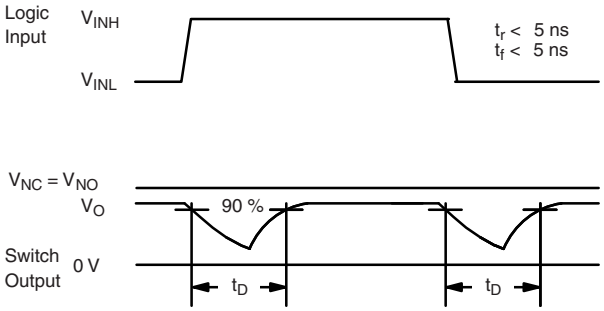

Figure 2. Break-Before-Make Interval

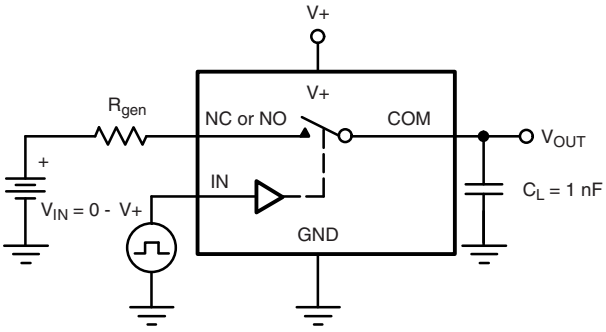

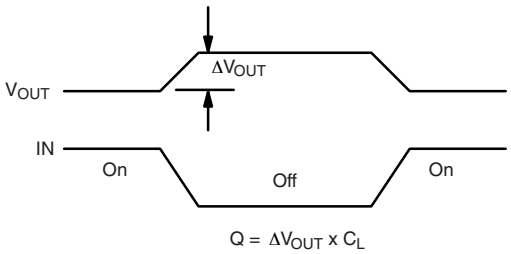

$Q = \Delta V_{OUT} \times C_L$

IN depends on switch configuration: input polarity determined by sense of switch.

Figure 3. Charge Injection

TEST CIRCUITS

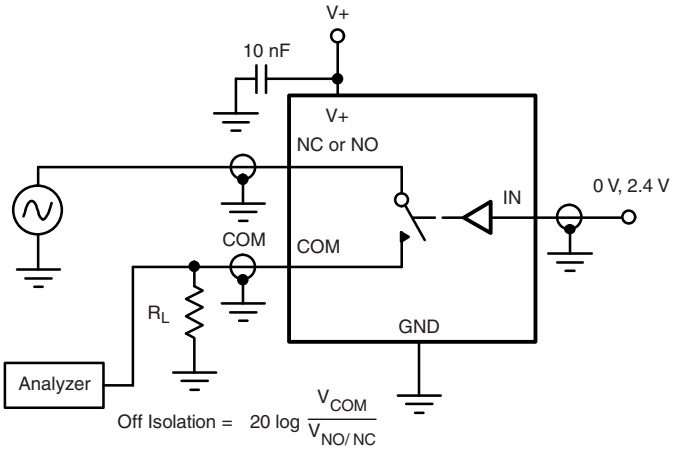

Figure 4. Off-Isolation

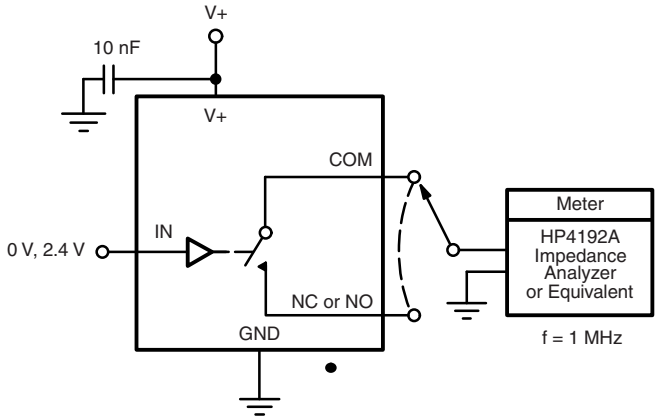

Figure 5. Channel Off/On Capacitance

PACKAGE OUTLINE

MICRO FOOT: 10 BUMP (4 x 3, 0.5 mm PITCH, 0.238 mm BUMP HEIGHT)

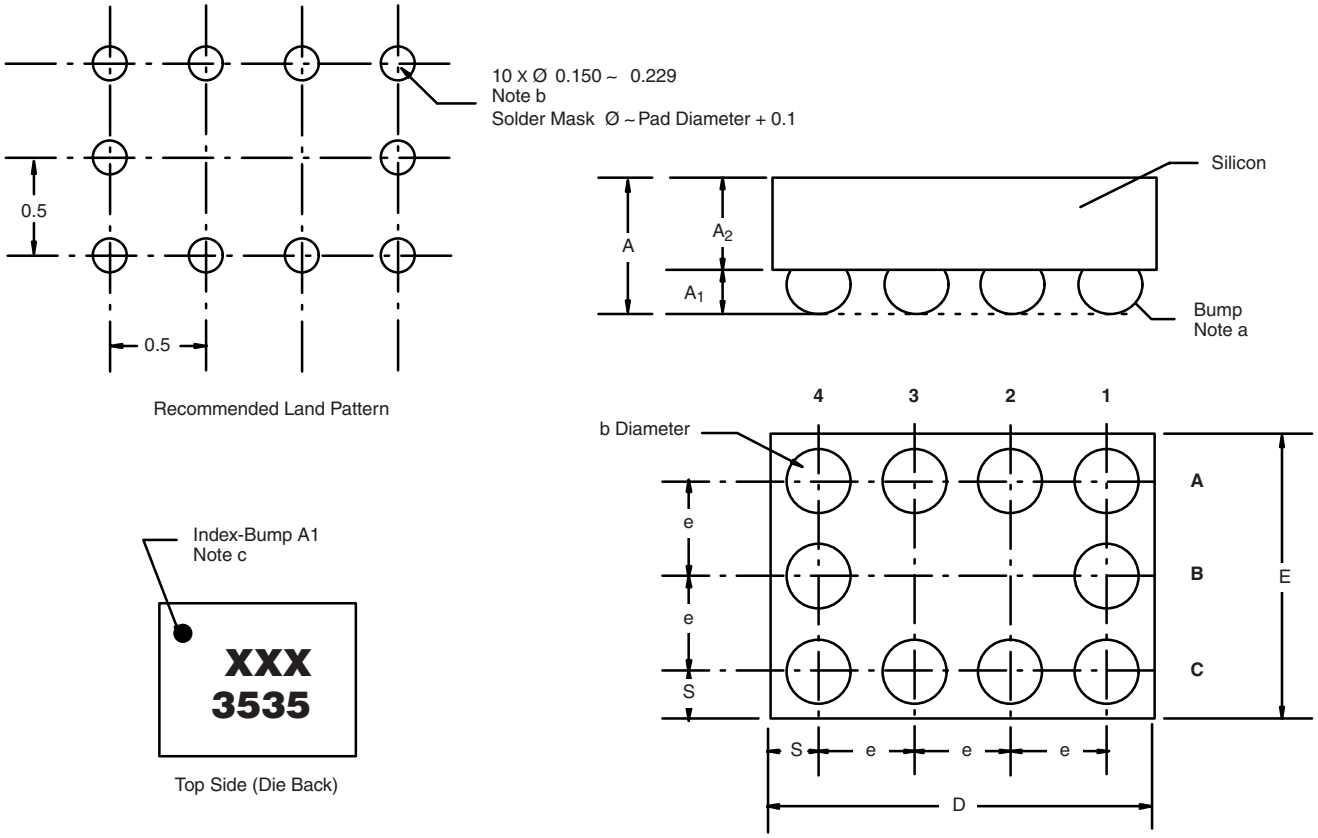

Notes (Unless Otherwise Specified):
a. Bump is Lead Free Sn/Ag/Cu.
b. Non-solder mask defined copper landing pad.
c. Laser Mark on silicon die back; back-lapped, no coating. Shown is not actual marking; sample only.

Dim.	Millimeters[a]		Inches	
	Min.	Max.	Min.	Max.
A	0.688	0.753	0.0271	0.0296
A_1	0.218	0.258	0.0086	0.0102
A_2	0.470	0.495	0.0185	0.0195
b	0.306	0.346	0.0120	0.0136
D	1.980	2.020	0.0780	0.0795
E	1.480	1.520	0.0583	0.0598
e	0.5 BASIC		0.0197 BASIC	
S	0.230	0.270	0.0091	0.0106

Notes:
a. Use millimeters as the primary measurement.

Vishay Siliconix maintains worldwide manufacturing capability. Products may be manufactured at one of several qualified locations. Reliability data for Silicon Technology and Package Reliability represent a composite of all qualified locations. For related documents such as package/tape drawings, part marking, and reliability data, see www.vishay.com/ppg?72961.

Disclaimer

ALL PRODUCT, PRODUCT SPECIFICATIONS AND DATA ARE SUBJECT TO CHANGE WITHOUT NOTICE TO IMPROVE RELIABILITY, FUNCTION OR DESIGN OR OTHERWISE.

Vishay Intertechnology, Inc., its affiliates, agents, and employees, and all persons acting on its or their behalf (collectively, “Vishay”), disclaim any and all liability for any errors, inaccuracies or incompleteness contained in any datasheet or in any other disclosure relating to any product.

Vishay makes no warranty, representation or guarantee regarding the suitability of the products for any particular purpose or the continuing production of any product. To the maximum extent permitted by applicable law, Vishay disclaims (i) any and all liability arising out of the application or use of any product, (ii) any and all liability, including without limitation special, consequential or incidental damages, and (iii) any and all implied warranties, including warranties of fitness for particular purpose, non-infringement and merchantability.

Statements regarding the suitability of products for certain types of applications are based on Vishay’s knowledge of typical requirements that are often placed on Vishay products in generic applications. Such statements are not binding statements about the suitability of products for a particular application. It is the customer’s responsibility to validate that a particular product with the properties described in the product specification is suitable for use in a particular application. Parameters provided in datasheets and/or specifications may vary in different applications and performance may vary over time. All operating parameters, including typical parameters, must be validated for each customer application by the customer’s technical experts. Product specifications do not expand or otherwise modify Vishay’s terms and conditions of purchase, including but not limited to the warranty expressed therein.

Except as expressly indicated in writing, Vishay products are not designed for use in medical, life-saving, or life-sustaining applications or for any other application in which the failure of the Vishay product could result in personal injury or death. Customers using or selling Vishay products not expressly indicated for use in such applications do so at their own risk and agree to fully indemnify and hold Vishay and its distributors harmless from and against any and all claims, liabilities, expenses and damages arising or resulting in connection with such use or sale, including attorneys fees, even if such claim alleges that Vishay or its distributor was negligent regarding the design or manufacture of the part. Please contact authorized Vishay personnel to obtain written terms and conditions regarding products designed for such applications.

No license, express or implied, by estoppel or otherwise, to any intellectual property rights is granted by this document or by any conduct of Vishay. Product names and markings noted herein may be trademarks of their respective owners.