Oct.1.2022 Copyright 2022 HIROSE ELECTRIC CO., LTD. All Rights Reserved.
In case of consideration for using Automotive equipment / device which demand high reliability, kindly contact our sales window correspondents.

HRS DRAWING FOR REFERENCE

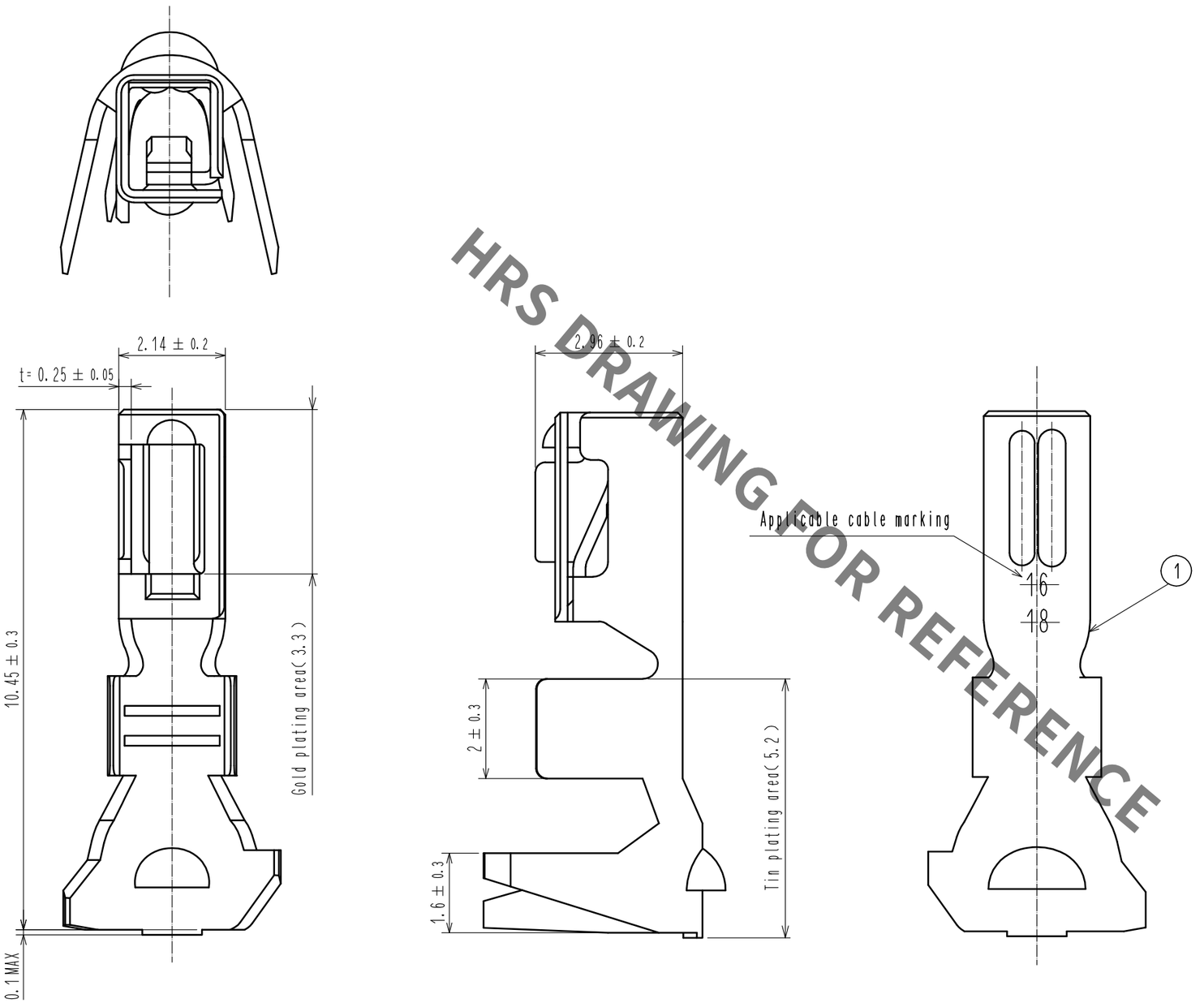

NOTE 1. Per pack : 100 Pieces.

NO.	MATERIAL	FINISH . REMARKS
1	Copper alloy	Contact area: Gold plating 0.2 μm MIN Barrel area: Tin plating 1 μm MIN Under area: Nickel plating 1 μm MIN

UNITS	SCALE	COUNT	DESCRIPTION OF REVISIONS	DESIGNED	CHECKED	DATE
mm	10 : 1	0				

APPROVED	SJ. OKAMURA	20210513
CHECED	SZ. ONO	20210513
DESIGNED	TS. KUMAZAWA	20210513
DRAWN	TS. KUMAZAWA	20210513

HIROSE ELECTRIC CO., LTD.

DRAWING NO.	EDC-393067-00-00
PART NO.	DF63A-1618SCA
CODE NO.	CL0680-0650-0-00

0 1/1