The product information in this catalog is for reference only. Please request the Engineering Drawing for the most current and accurate design information.
All non-RoHS products have been discontinued, or will be discontinued soon. Please check the products status on the Hirose website RoHS search at www.hirose-connectors.com, or contact your Hirose sales representative.

3.96mm Pitch Connector Directly Mounted on Board

DF6 Series

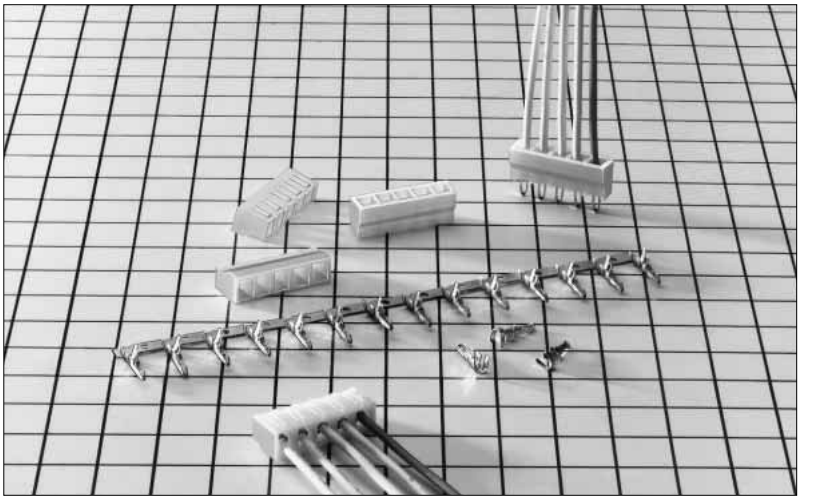

■Features

1. Service Efficiency Up

Conventional thick cables are directly mounted on the board piece by piece, but connecterization has achieved soldering services in a batch. This product enhances soldering service efficiency.

2. Miniaturization

This product achieves miniaturization for thick cables.

Mounting height on board : 7.5mm

Width : 5.0mm

3. Board Prefixed Mechanism

Since the connector is softly press-fitted to the board for insertion, it can be prefixed to the board.

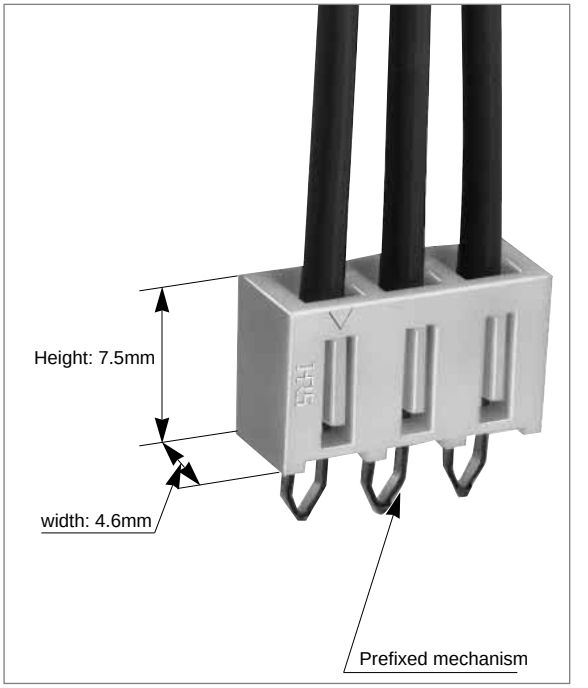

■Applications

Secondary power supply units for various equipment

Nov.1.2017 Copyright 2017 HIROSE ELECTRIC CO., LTD. All Rights Reserved.

The product information in this catalog is for reference only. Please request the Engineering Drawing for the most current and accurate design information.
All non-RoHS products have been discontinued, or will be discontinued soon. Please check the products status on the Hirose website RoHS search at www.hirose-connectors.com, or contact your Hirose sales representative.

■Product Specifications

Rating	Current rating (Note 1)	Cable size	AWG 18 : 5A AWG 20 : 4A AWG 22 : 3A	Operating Temperature Range Operating Moisture Range	-35 to +85℃ (Note 1) 40 to 80%
	Voltage rating	300V AC		Storage Temperature Range Storage Humidity Range	-10 to +60℃ (Note 2) 40 to 70% (Note 2)

Item	Specification	Condition
1.Insulation Resistance	1000M ohms min.	500V DC
2.Withstanding voltage	No flashover or insulation breakdown.	1500V AC/1 minute
3.Contact Resistance	15m ohms max.	100mA
4.Vibration	No damage, cracks, or parts looseness.	Frequency: 10 to 55 Hz, single amplitude of 0.75 mm, 2 hours in each of the 3 directions.
5.Humidity (Steady state)	No damage, cracks, or parts looseness.	96 hours at temperature of 40℃ and humidity of 90% to 95%
6.Temperature Cycle	No damage, cracks, or parts looseness.	(-55℃: 30 minutes →15 to 35℃: 10 minutes→85℃: 30 minutes→ 5 to 35℃: 10 minutes) 5 cycles
7. Resistance to Soldering heat	No deformation of components affecting performance.	Flow: 250℃ for 10 seconds
		Manual soldering: 300℃ for 3 seconds

Note 1: The rated current will be changed according to cable sizes for use.
Note 2: Includes temperature rise caused by current flow.
Note 3: The term "storage" refers to products stored for long period of time prior to mounting and use. Operating Temperature Range and Humidity range covers non conducting condition of installed connectors in storage, shipment or during transportation.
Note 4: Information contained in this catalog represents general requirements for this Series.Contact us for the drawings and specifications for a specific part number shown.

■Material

Product	Part	Material	Finish	Remarks
Crimping Plug	Insulator	Polyamide	White	UL94V-0
Crimping Contact for Plug	Brass	Copper Alley	Tin plated	————

■Ordering Information

●Crimping Plug

DF6 - ＊ P - 3.96 C
❶ ❷ ❸ ❹ ❺

❶ Series Name : DF 6	❹ Contact pitch: 3.96mm
❷ Number of contacts: 1～8, 10	❺ C: Crimping plug
❸ Connector type P: Plug	

●Crimping Contact

DF6A - 1822 PCF
❶ ❷ ❸

❶ Applicable cable type None : Jacket dia. 1.5mm to 2.2mm UL 1007 A : Jacket dia. 2.2mm to 2.9mm UL 1015	❸ Packaging type PCF: Plug contact, reel packaging SC: Plug contact, bag packaging
❷ Applicable cable size 1822 : AWG#18~#22	

Nov.1.2017 Copyright 2017 HIROSE ELECTRIC CO., LTD. All Rights Reserved.

■Precrimping Plug

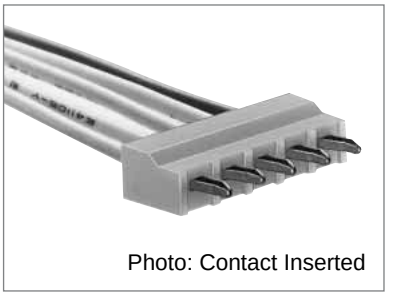

Photo: Contact Inserted

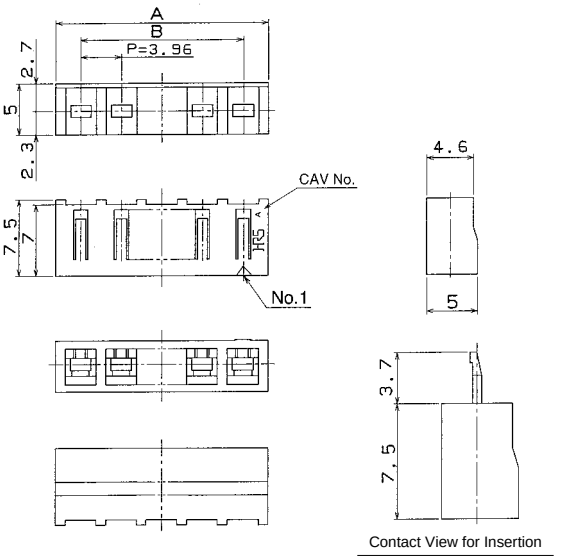

Part Number	CL No.	Number of Contacts	A	B	RoHS
DF6- 1P-3.96C	546-0001-1	1	4.92	———	YES
DF6- 2P-3.96C	546-0002-4	2	8.88	3.96	
DF6- 3P-3.96C	546-0003-7	3	12.84	7.92	
DF6- 4P-3.96C	546-0004-0	4	16.80	11.88	
DF6- 5P-3.96C	546-0005-2	5	20.76	15.84	
DF6- 6P-3.96C	546-0006-5	6	24.72	19.80	
DF6- 7P-3.96C	546-0007-8	7	28.68	23.76	
DF6- 8P-3.96C	546-0008-0	8	32.64	27.72	
DF6-10P-3.96C	546-0011-5	10	40.56	35.64	

Note: A packaging quantity is delivered by the bag unit (100 pcs.).

■Crimping Contact

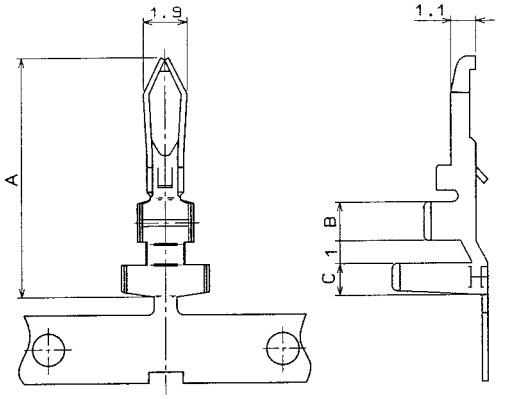

●Slip length
DF6-1822PC (F): 2.1mm to 2.6mm
DF6A-1822PC (F): 2.3mm to 2.8mm
●Applicable through-hole: 1.8 $^{+0.15}_{0}$

Part Number	CL No.	Applicable Cable				Packaging Type	Quantity	A	B	C	RoHS
		UL style	Jacket dia.	AWG size	Contact Construct						
DF6 -1822PCF(05)	546-0009-3-05	1007	1.5 to 2.2mm	AWG 18	34 cores/0.18mm	Reel	5,000	10.2	1.5	1.2	YES
DF6 -1822PC(05)	546-0010-2-05			AWG 20	21 cores/0.18mm	Bag	100				
DF6A-1822PCF(05)	546-0013-0-05	1015	2.2 to 2.9mm	AWG 22	17 cores/0.16mm	Reel	3,000	10.5	1.7	1.4	
DF6A-1822PC(05)	546-0014-3-05					Bag	100				

Note 1. The applicable cable conductor is a tin plated and annealed copper wire.
Note 2. If other cables are used instead of the applicable cable, contact the Hirose Sales Department.

◆Applicable Crimping Tools

TypeItem	Part Number	CL No.	Applicable Contact
Applicator	AP105-DF6-1822P	901-4505-9	DF6 -1822PCF(05)
	AP105-DF6A-1822P	901-4520-2	DF6A-1822PCF(05)
Press unit	CM-105	901-0005-4	————
Manual crimping tool	DF6 -TA1822HC	550-0174-9	DF6 -1822PC(05)
	DF6A-TA1822HC	550-0222-0	DF6A-1822PC(05)
Extraction tool	DF-C-PO(A)	550-0170-8	DF6/DF6A-1822PC(F)(05)

Note: If any trouble has been caused due to other tools, which are not designated by Hirose, Hirose never guarantee any products.

Nov.1.2017 Copyright 2017 HIROSE ELECTRIC CO., LTD. All Rights Reserved.

The product information in this catalog is for reference only. Please request the Engineering Drawing for the most current and accurate design information.
All non-RoHS products have been discontinued, or will be discontinued soon. Please check the products status on the Hirose website RoHS search at www.hirose-connectors.com, or contact your Hirose sales representative.

Precautions

1.Recommended soldering condition	Flow: 250℃ for 3 seconds Manual soldering: 290℃ for 2 seconds ■After soldering, if a load is given to the cable where connector and cable contain heat, the jacket holding member will be loosened. After soldering, the operation should be performed, after connector returns to room temperature.
2.Cleaning condition	Refer to the "Nylon Connector Use Hand book". Don't use solvent to degrade the cable jacket like trichloroethane. In addition, avoid heat cleaning with solvent.
3.Connecting condition	Refer to the "Nylon Connector Use Hand book".
4.Precations	Slight discoloration on the insulating materials will not affect form, fit or function of the connectors. Refer to "Nylon Connector Use Handbook"

Nov.1.2017 Copyright 2017 HIROSE ELECTRIC CO., LTD. All Rights Reserved.