The product information in this catalog is for reference only. Please request the Engineering Drawing for the most current and accurate design information.
All non-RoHS products have been discontinued, or will be discontinued soon. Please check the products status on the Hirose website RoHS search at www.hirose-connectors.com, or contact your Hirose sales representative.

1 mm Pitch Double Rows Low Profile Board-to-Cable Connectors

DF20 series

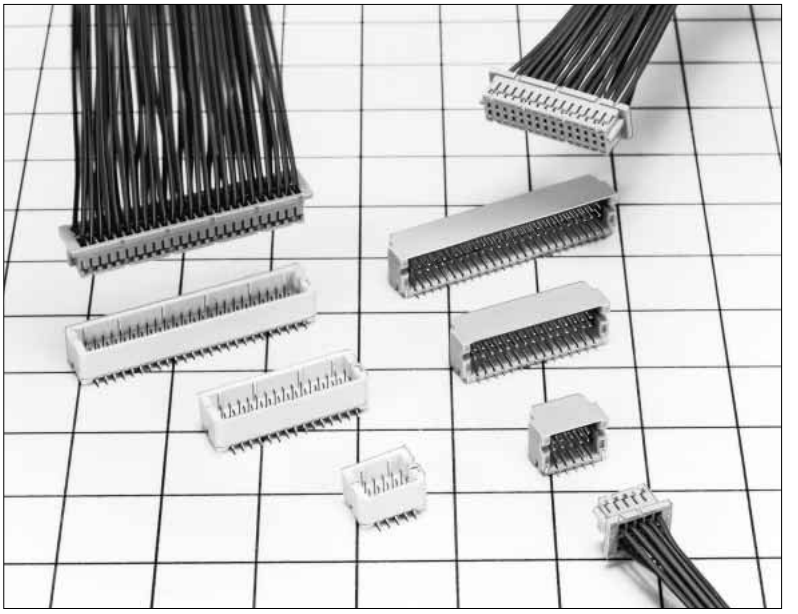

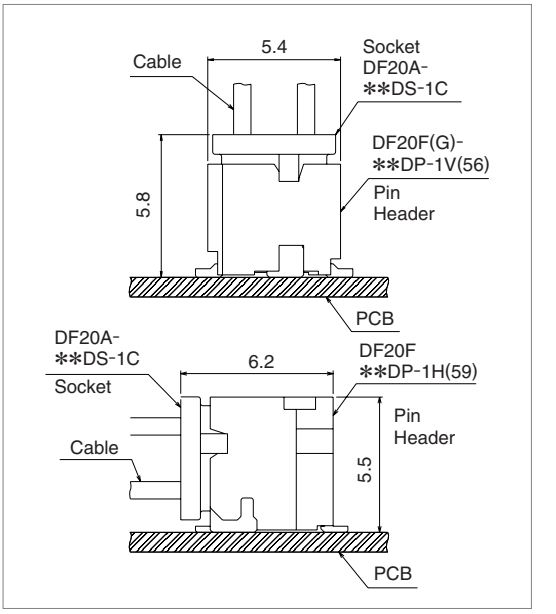

■Features

1. Contact Pitch

1 mm contact pitch allows reliable solder and cable termination.

2. Reliable electrical connection wipe

Effective electrical connection is assured with a 1mm wipe of mating contacts.

3. Narrower external width and length

Redesigned metal fittings decreased the overall length of the board- mount receptacle and permit end-to-end mounting of several connectors.

4. Automatic equipment board placement

Straight type pin headers are supplied with a 5.4 mm X 4.6mm flat platform to allow vacuum pick-up and placement on the board.

5. Product variations

(1) Available with 10, 20, 30, 40, and 50 contacts.
(2) Pin headers are available in two types: with or without board positioning bosses.
(3) Depending on specific application pin headers can be ordered in straight or right angle types.

■Applications

Notebook PC, small office automation equipment, small consumer devices, portable devices.

Any application requiring low profile reliable board-to-cable connection with a AWG #28, AWG#30, AWG#32 conductors.

1mm Pitch, Double Rows





Narrower external width and length

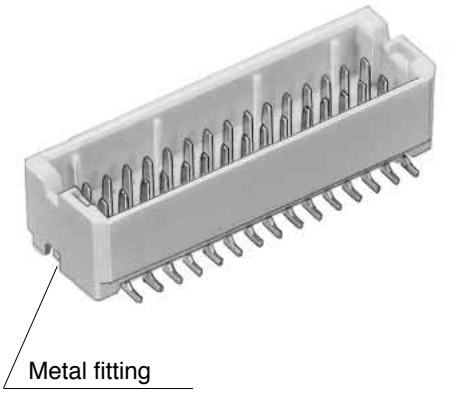

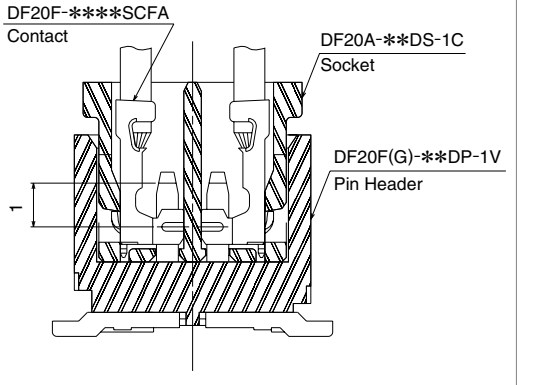

■Product Specifications

Rating	Rated current	AWG#28 : 1A AWG#30 : 0.9A AWG#32 : 0.7A	Operating temperature range	-35°C to 85°C (Note 1,2)	Storage temperature range	-10°C to 60°C (Note 2)
	Rated voltage	100V AC	Operating humidity range	40% to 80%	Storage humidity range	40% to 70%

Item	Specifications	Conditions
1.Insulation resistance	500MΩ min.	Measured at 100V DC
2.Withstanding voltage	No flashover or insulation breakdown	Conduction of 300V AC applied for 1 minute
3.Contact resistance	30MΩ max.	Measure at 100mA.
4.Insertion-Extraction force (per contact)	0.2 N Min., 2 N Max.	Measured with a steel pin of 0.2 ±0.005 thickness
5.Vibration	No electrical discontinuity of 1μs min.	Frequency of 10 to 55 Hz, single amplitude of 0.75 mm, in 3 directions for 2hours
6.Humidity	Contact resistance of 30mΩ max., insulation resistance of 100MΩ min.	Temperature of 40±2℃, humidity of 90% to 95%, left standing for 96 hours
7.Temperature cycle	Contact resistance of 30mΩ max,insulation resistance of 500MΩ min.	(-55℃:30min → 5℃ to 35℃: 2 to 3min → 85℃:30min → 5℃ to 35℃:2 to 3min) for 5 cycles
8.Mechanical operation	Contact resistance of 30mΩ max.	50 cycles
9.Resistance to Soldering heat	No deformation of the insulator parts that will affect performance	Reflow: At the recommended temperature profile, manual solder: Soldering iron temperature of 300°C for 3 seconds

Note1: Includes temperature rise caused by current flow.
Note2: The term “storage” refers to products stored for long periods of time prior to mounting and use.
Operating temperature range and Humidity range covers non-conducting conditions of installed connectors in storage, shipment or transportation.
Note3: Information contained in this catalog represents general requirements for this Series. Contact us for the drawings and specifications for a specific part number shown.

■Materials

Item	Part	Material	Finish	Remarks
Socket	Insulator	Polyamide	Color : Beige	UL94V-0
Socket contact	Contact	Phosphor bronze	Gold plating	———
Pin header	Insulator	Polyamide	Color : Beige	UL94V-0
	Contact	Phosphor bronze	Gold plating	———
	Metal Fitting	Brass	V type: Solder plating H type: Tin-Copper plating (Pb free)	

■Ordering Information

●Connectors

DF20 # - ＊ DS - 1 C
❶ ❷ ❸ ❹ ❺ ❻

❶ Series name : DF20	❹ Connector type DS: Double-row socket DP: Double-row pin header
❷ Boss Type ■Pin header F: Without boss G: With boss ■Crimp socket: A	❺ Contact pitch: 1 mm ❻ Type of housing, header C: Crimp housing V: Straight SMT header H: Right angle SMT header
❸ Number of contacts: 10, 20, 30, 40, 50	

●Contacts

DF20 F - 2830 SCF A (＊＊)
❶ ❷ ❸ ❹ ❺

❶ F	❸ Contact & packaging type SCF: Socket contact reel	❺ Packaging Specifications Blank: 1 reel = 10,000 pieces 41: 1 reel = 20,000 pieces
❷ Applicable wire size 2830: AWG #28 to 30 3032: AWG #30 to 32	❹ Plating type A: Gold plating	

The product information in this catalog is for reference only. Please request the Engineering Drawing for the most current and accurate design information.
All non-RoHS products have been discontinued, or will be discontinued soon. Please check the products status on the Hirose website RoHS search at www.hirose-connectors.com, or contact your Hirose sales representative.

■Double Row Socket



Shown with terminated and installed contacts

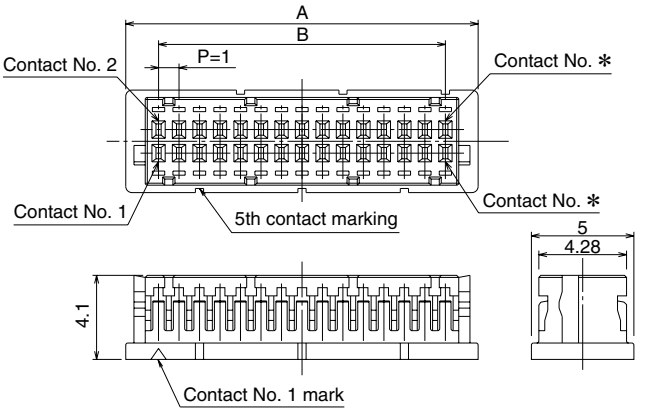

Unit: mm

Part Number	CL No.	Number of Contacts	A	B	RoHS
DF20A-10DS-1C	686-0020-3	10	7.2	4.0	YES
DF20A-20DS-1C	686-0021-6	20	12.2	9.0	
DF20A-30DS-1C	686-0022-9	30	17.2	14.0	
DF20A-40DS-1C	686-0023-1	40	22.2	19.0	
DF20A-50DS-1C	686-0024-4	50	27.2	24.0	

[Specifications number]-*, (**)
(59): Gold plating, embossed tape packaging

Note: Sales quantities are by the package unit (containing 100 pieces). Please order by package unit.

■Socket Crimp Contacts

Product No.	CL No.	Type of contacts	Quantity	Plating type	RoHS
DF20F-2830SCFA(∗∗)	686-0042-6-∗∗	Reel contacts	See specifications number column	Gold plating	YES
DF20F-3032SCFA(∗∗)	686-0043-9-∗∗				
DF20F-36SCFA(∗∗)	686-0051-7-∗∗				

[Specifications number] -*, (**)
(04): 10,000 pieces / reel
(44): 20,000 pieces / reel

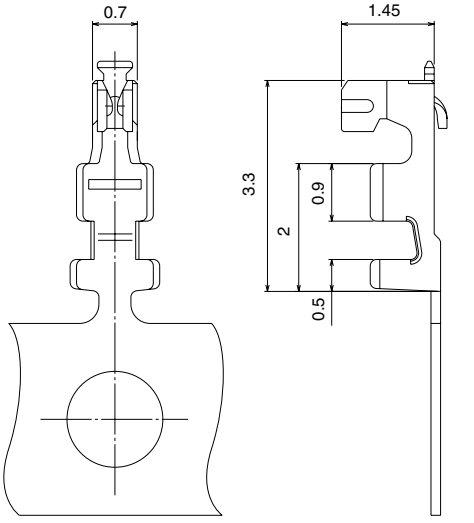

●Applicable Wire (Tin plated solid soft conductor)

Applicable Wire Size (Stranded wire conductor)	Jacket diameter
AWG #28 (7/0.127 mm)	0.5mm to 0.6 mm
AWG #30 (7/0.1 mm)	
AWG #32 (7/0.08 mm)	

●Recommended wire
UL1571

●Strip length
1.2 to 1.9 mm

Note: When using other than the recommended wire, contact your nearest Hirose representative.

●Applicable Crimping Tools

Type	CL No.	Product No.
Applicator	901-4572-6	AP105-DF20-2830S
Press	901-0005-4	CM-105

Note 1: Hirose Electric will not be responsible for any problems caused by use of tools other than specified.
Note 2: The manual crimping tool can be also used for cutting-off individual contacts from the reel.
Note 3: Customers that already have DF13 Series Hirose's press units and applicators will be able to use them for DF20 Series crimp terminations by replacing of only crimper and anvil.
Note4: The crimping tool for the DF20F-3032SCFA can also be used with the DF20F-2830SCFA.

■Replacement Parts List for Applicator

Type	Product No.	CL No.
Insulation crimper	AP105-DF20-2830S(61)	901-4572-6-61
Wire crimper	AP105-DF20-2830S(62)	901-4572-6-62
Insulation anvil and wire anvil	AP105-DF20-2830S(63)	901-4572-6-63

■ Double Row Straight Pin header

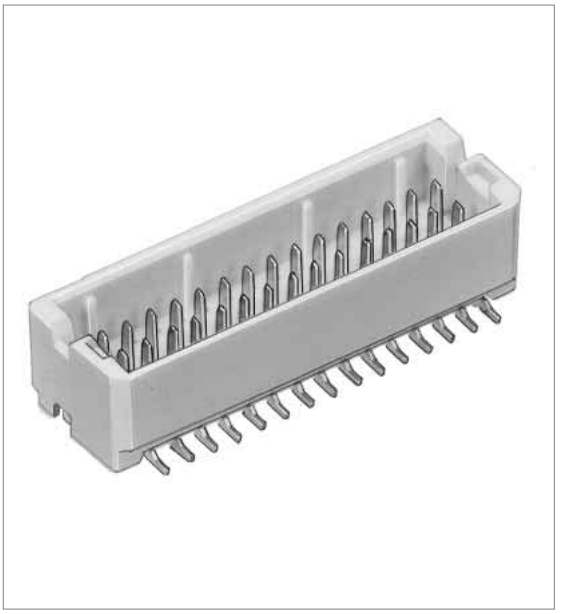

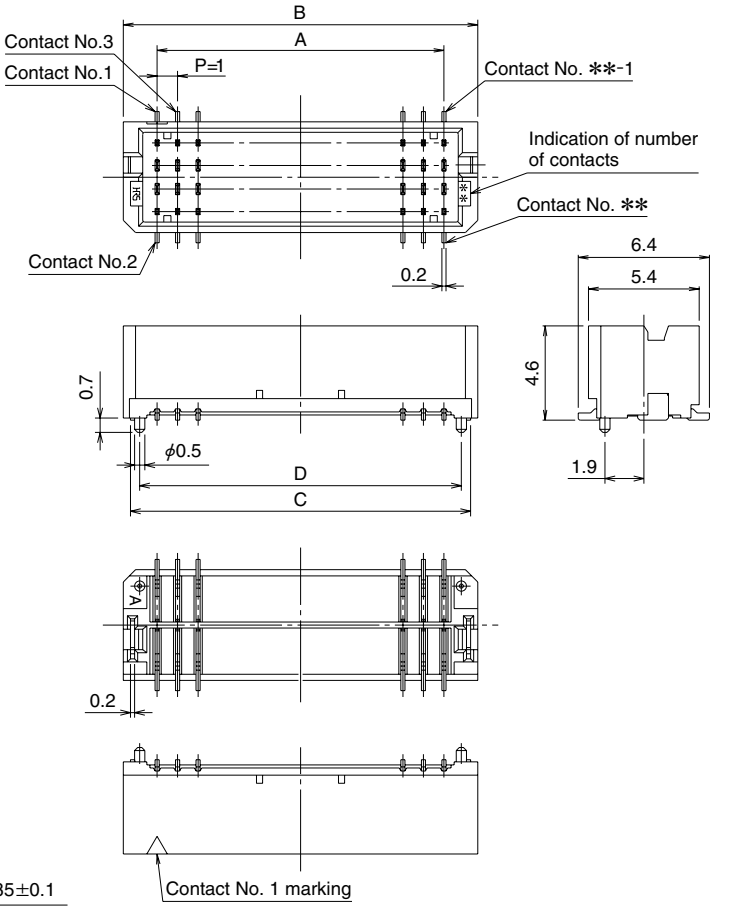

◆PCB Footprints

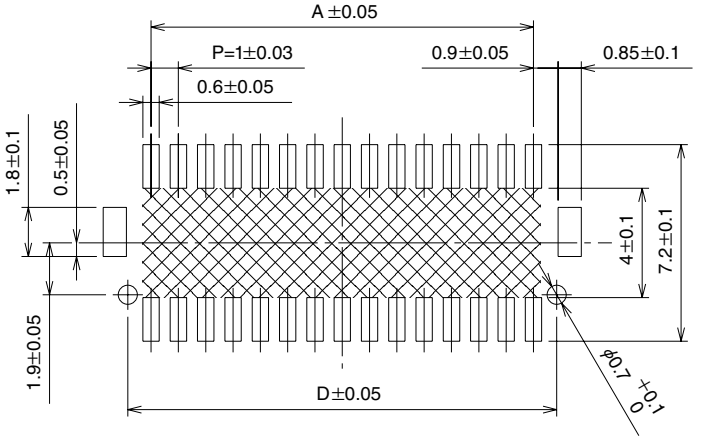

Note 1:Shaded area must be free of any electrically conductive traces to avoid contact with soldered pin header terminations.
Note 2: Required only for pin headers supplied with the positioning boss.

Unit: mm

Part Number	CL No.	No. of contacts	A	B	C	D	Remarks	RoHS
DF20F -10DP-1V(56)	CL686-0032-2-56	10	4.0	7.3	6.6	—	Without boss	YES
DF20F -20DP-1V(56)	CL686-0033-5-56	20	9.0	12.3	11.6	—		
DF20F -30DP-1V(56)	CL686-0034-8-56	30	14.0	17.3	16.6	—		
DF20F -40DP-1V(56)	CL686-0035-0-56	40	19.0	22.3	21.6	—		
DF20F -50DP-1V(56)	CL686-0036-3-56	50	24.0	27.3	26.6	—		
DF20G-10DP-1V(56)	CL686-0037-6-56	10	4.0	7.3	6.6	5.7	With boss	
DF20G-20DP-1V(56)	CL686-0038-9-56	20	9.0	12.3	11.6	10.7		
DF20G-30DP-1V(56)	CL686-0039-1-56	30	14.0	17.3	16.6	15.7		
DF20G-40DP-1V(56)	CL686-0040-0-56	40	19.0	22.3	21.6	20.7		
DF20G-50DP-1V(56)	CL686-0041-3-56	50	24.0	27.3	26.6	25.7		

Note1: Order embossed tape packaging items by the reel. (1 reel contains 1,000 pieces)
Note2: Vacuum pick-up cap are included with embossed tape packaged connectors.

[Specifications number]-*, (**)
(56): Gold plating, embossed tape packaging

The product information in this catalog is for reference only. Please request the Engineering Drawing for the most current and accurate design information.
All non-RoHS products have been discontinued, or will be discontinued soon. Please check the products status on the Hirose website RoHS search at www.hirose-connectors.com, or contact your Hirose sales representative.

■Double Row Right angle Pin header



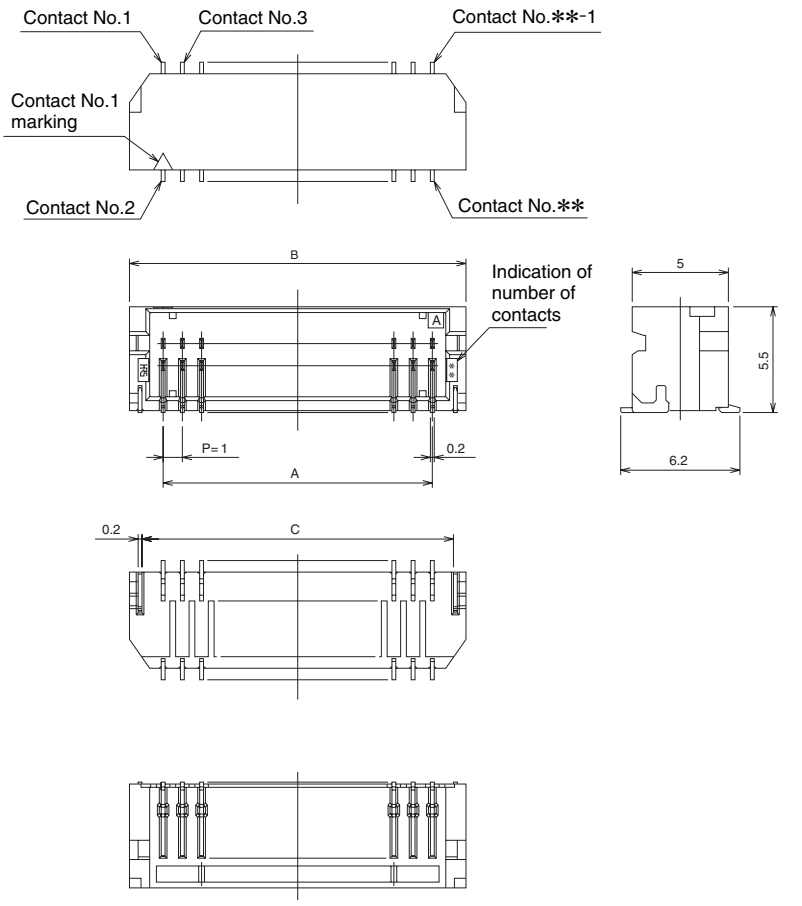

◆PCB Footprints

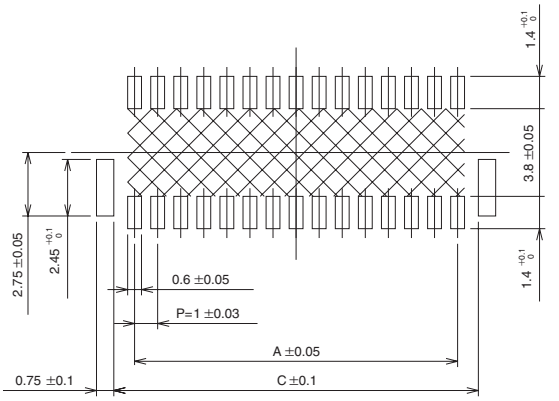

Note : Shaded area must be free of any electrically conductive traces to avoid contact with soldered pin header terminations.

Unit: mm

Part Number	CL No.	No. of contacts	A	B	C	Remarks	RoHS
DF20F -10DP-1H(59)	686-0027-2(59)	10	4.0	7.5	6.2	Without boss	YES
DF20F -20DP-1H(59)	686-0028-5(59)	20	9.0	12.5	11.2		
DF20F -30DP-1H(59)	686-0029-8(59)	30	14.0	17.5	16.2		
DF20F -40DP-1H(59)	686-0030-7(59)	40	19.0	22.5	21.2		

[Specifications number]-*, (**)
(59): Gold plating, embossed tape packaging

Note:Order embossed tape packaging items by the reel. (1 reel contains 1,000 pieces)

◆Embossed Carrier Tape Dimensions

●Straight pin header

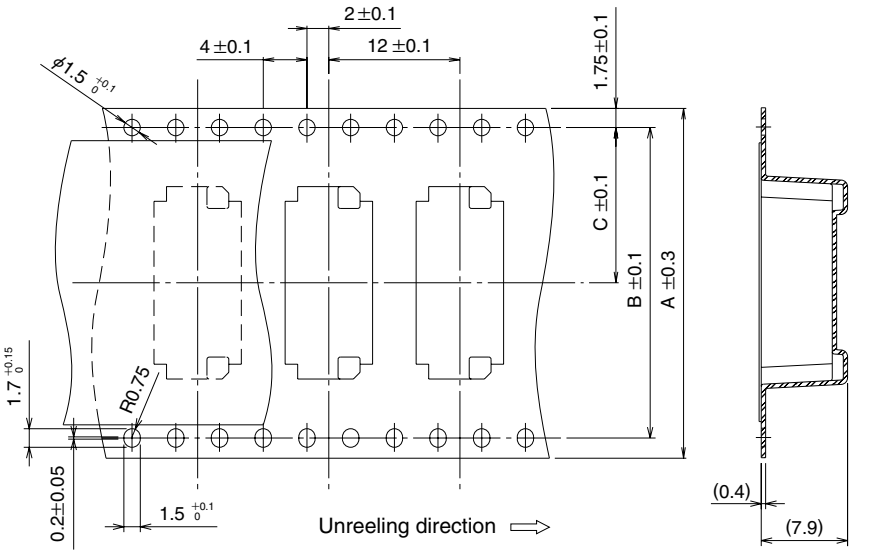

●Right angle pin header

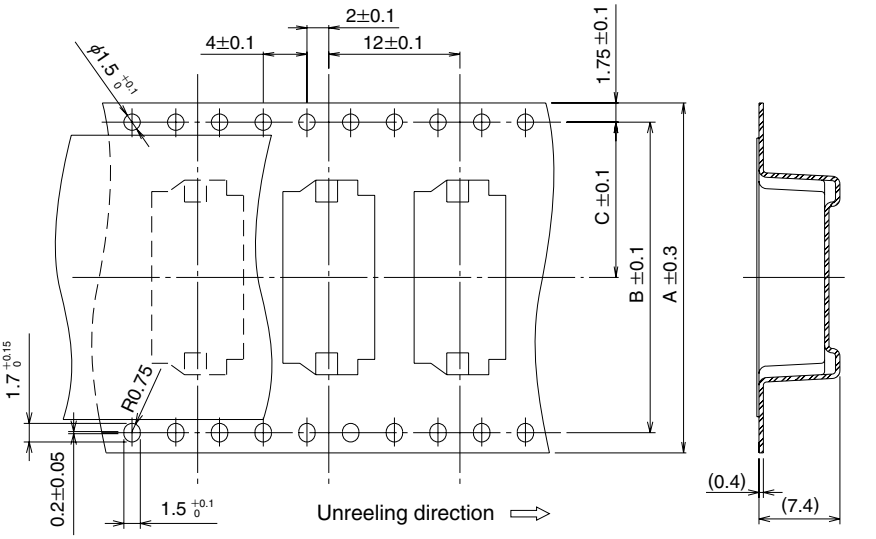

●Reel dimensions

Part Number	No. of Contacts	A	B	C	D
DF20F(G)-10DP-1V(56)	10	16	——	7.5	16.4
DF20F(G)-20DP-1V(56)	20	24	——	11.5	24.4
DF20F(G)-30DP-1V(56)	30	32	28.4	14.2	32.4
DF20F(G)-40DP-1V(56)	40	44	40.4	20.2	44.4
DF20F(G)-50DP-1V(56)	50	44	40.4	20.2	44.4
DF20F - 10DP-1H(59)	10	16	——	7.5	16.4
DF20F - 20DP-1H(59)	20	24	——	11.5	24.4
DF20F - 30DP-1H(59)	30	32	28.4	14.2	32.4
DF20F - 40DP-1H(59)	40	44	40.4	20.2	44.4

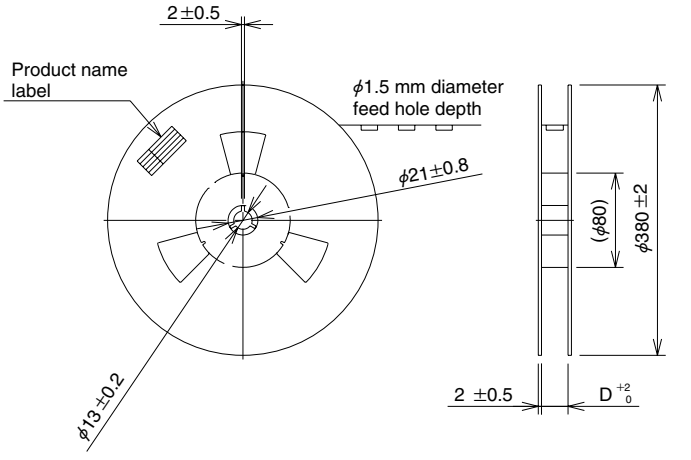

The product information in this catalog is for reference only. Please request the Engineering Drawing for the most current and accurate design information.
All non-RoHS products have been discontinued, or will be discontinued soon. Please check the products status on the Hirose website RoHS search at www.hirose-connectors.com, or contact your Hirose sales representative.

Usage recommendation

1. Recommended Soldering Temperature Profile for IR Reflow.	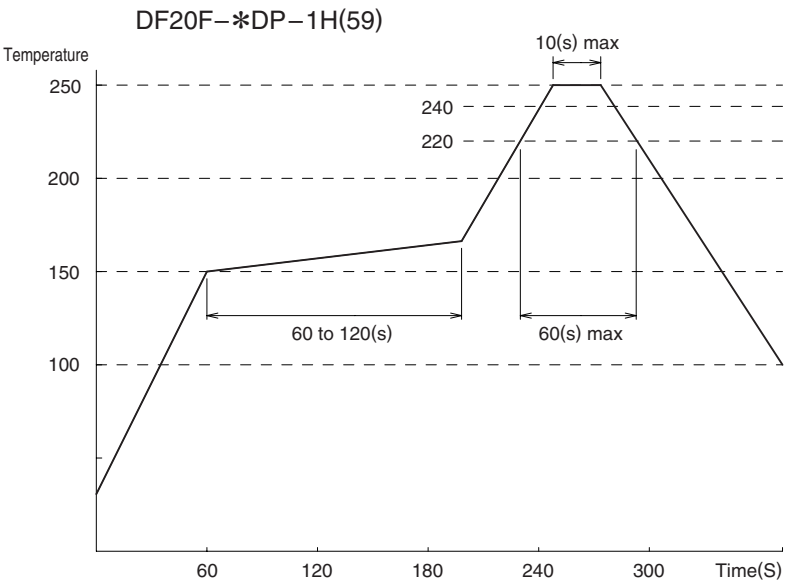 Note 1: Up to 2 cycles of reflow soldering are possible under the same conditions, provided that there is a return to normal temperature between the first and second cycle. Note 2: The temperature indicates the board surface temperature at the points of contacts with the connector terminals.
2. Recommended Manual Soldering Conditions	Soldering temperature: 290°C ±10°C, Soldering time: within 3 sec.
3. Recommended Solder Screen Thickness	0.15mm
4. Board Warping	Maximum of 0.03 mm at the connector center section, with both ends of the connector as reference points.
5. Cleaning Conditions	Refer to "Nylon Connector Use Handbook."
6. Wiring Termination Conditions	Refer to "Nylon Connector Use Handbook." Crimp contacts should be handled with care as not to cause any deformation or damage affecting the performance or termination.
7. Mating / un-mating precautions	Excessive twisting and pulling on wires during mating/un-mating should be avoided as it may cause damage to connectors.