1.25mm Pitch Miniature Crimping Connector

DF13 Series

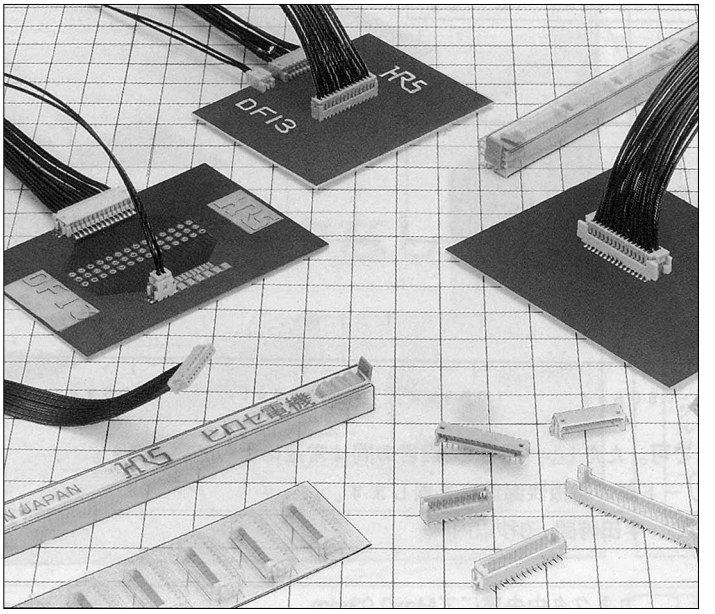

Type		Mounting Type	Mounting Height(h)
Straight Type	DIP	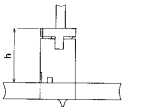	5.3mm
	SMT	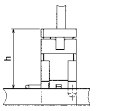	5.8mm
Right Angle Type	DIP		3.6mm
	SMT	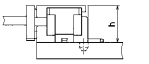	

■Features

1. Miniature Size

Designed in the low profile at mounting height 5.8mm. (SMT mounting straight type)
(For DIP type, the mounting height is to 5.3mm to the straight and 3.6mm at the right angle)

2. Multi-contact

The double row type achieves the multi-contact up to 40 contacts, and secures 30% higher density in the mounting area, compared with the single row type.

3. Correspond to Automatic Mounting

The header provides the grade with the vacuum absorption area, and secures automatic mounting by the embossed tape packaging.
In addition, the tube packaging can be selected.

4. Integral Basic Function Despite Miniature Size

The header is designed in a scoop-proof box structure, and completely prevents mis-insertion.
In addition, the surface mounting (SMT) header is equipped with the metal fitting to prevent solder peeling.

■Applications

Note PC, mobile terminal, miniature type business equipment, and other various consumer equipment, including video camera

Correspond to Automatic Mounting
Secure the automatic plain area for the absorption type automatic mounting machine.

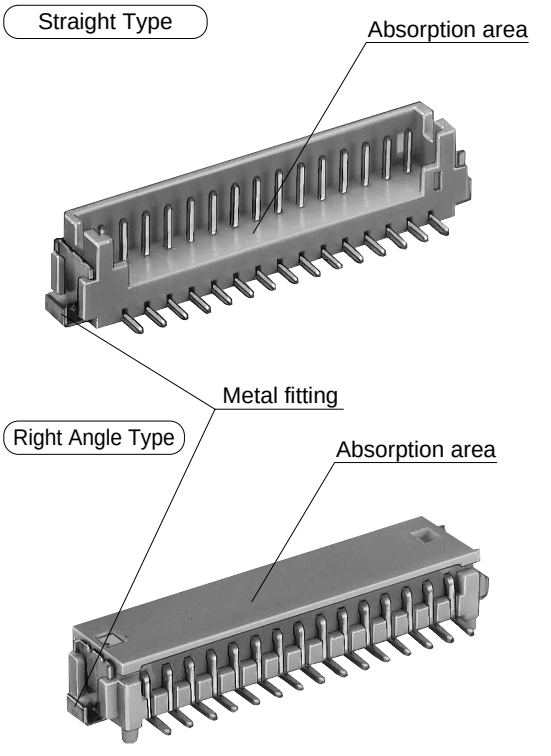

Figure 1

■Product Specifications

Rating	Current rating 1A	Operating Temperature Range: -35 to +85℃ (Note 1)	Storage Temperature Range: -10 to +60℃ (Note 2)
	Voltage rating 150V AC	Operating Moisture Range: 20 to 80%	Storage Moisture Range: 40 to 70% (Note 2)

Item	Specification	Condition
1.Insulation Resistance	500M ohms min.	100V DC
2.Withstanding voltage	No flashover or insulation breakdown.	500V AC/1 minute
3.Contact Resistance	30m ohms max.	100mA
4.Single Insertion/Extraction Force	0.3N (30gf) min., 3N (300gf) max.	Measured at the square steel pin of 0.35±0.002mm
5.Vibration	No electrical discontinuity of 1μs or more	Frequency: 10 to 55 Hz, single amplitude of 0.75 mm, 2 hours in each of the 3 directions.
6.Humidity (Steady state)	Contact resistance: 30m ohms max. Insulation resistance: 500M ohms min.	96 hours at temperature of 40℃ and humidity of 90% to 95%
7.Temperature Cycle	Contact resistance: 30m ohms max. Insulation resistance: 500M ohms min.	(-55℃: 30 minutes→ 5 to 35℃: 10 minutes→ 85℃: 30 minutes→ 5 to 35℃: 10 minutes) 5 cycles
8.Durability (Mating/un-mating)	Contact resistance: 30m ohms max.	Tin plating: 30 cycles Gold plating: 50 cycles
9.Resistance to Soldering heat	No deformation of components affecting performance.	Flow: 250℃ for 10 seconds
		Manual soldering: 300℃ for 3 seconds
		Reflow: At the recommended temperature profile
		Manual soldering: 300℃ for 3 seconds

Note 1: Includes temperature rise caused by current flow.
Note 2: The term "storage" refers to products stored for long period of time prior to mounting and use. Operating Temperature Range and Humidity range covers non conducting condition of installed connectors in storage, shipment or during transportation.
Note 3: Information contained in this catalog represents general requirements for this Series. Contact us for the drawings and specifications for a specific part number shown.

■Material

Product	Part	Material	Finish	Remarks
Crimping Socket	Insulator	Polyamide	Beige	UL94V-0
Crimping Contact for Socket	Contact	Phosphor copper	Tin plated or gold plated	———
Pin Header (Through hole)	Insulator	Polyamide	Beige	UL94V-0
	Contact	Brass	Tin plated	———
Pin Header (SMT Single row)	Insulator	Polyamide	Beige	UL94V-0
	Contact	Brass	Tin plated or gold plated	———
	Metal Fitting	Phosphor copper	Tin plated	———
Pin Header (SMT Double row)	Insulator	Polyamide	Beige	UL94V-0
	Contact	Brass	Tin-copper plated or gold plated	———
	Metal Fitting	Phosphor copper	Tin plated	———

■Ordering Information

●Connector

DF13 # - * S - 1.25 C
❶ ❷ ❸ ❹ ❺ ❻

❶ Series Name : DF13	❸ Number of Contacts Single row: 2 to 12, 14, 15 Double row: 10, 20, 30, 40	❺ Contact Pitch: 1.25mm
❷ Style Symbol : Blank: With boss A: Without boss V Type — B: With boss, embossed tape type C: Without boss, embossed tape type	❹ Connector Type S: Single row socket / P: Single row pin header DS: Double row socket / DP: Double row pin header	❻ Connection Form / Contact Style. C : Crimping socket / DSA : Straight through hole DS : Right angle through hole / V : Straight SMT H : Right angle SMT

●Contact

DF13 # - 2630 SCF A
❶ ❷ ❸ ❹

❶ Style Symbol Blank: Standard G: Low insertion / extraction	❸ Packaging Type SCF: Socket Contact/Reel
❷ Applicable Cable Size 2630: AWG26 to 30 3032: AWG30 to 32	❹ Plating Type Blank: Tin plated A : Gold plated

■Single Row Socket

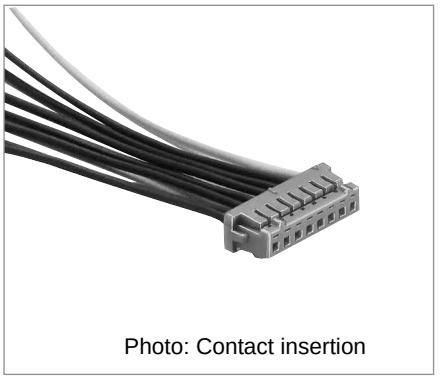

Photo: Contact insertion

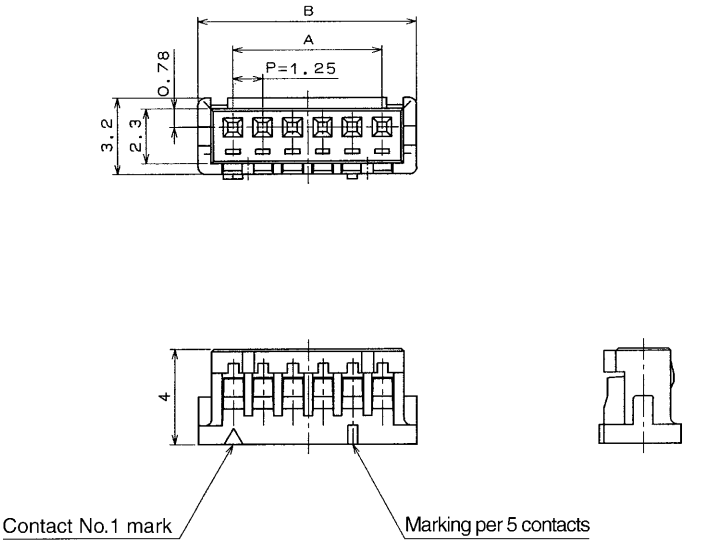

Unit: mm

Part Number	CL No.	Number of Contacts	A	B	RoHS
DF13-2S-1.25C	536-0001-4	2	1.25	4.15	Yes
DF13-3S-1.25C	536-0002-7	3	2.50	5.40	
DF13-4S-1.25C	536-0003-0	4	3.75	6.65	
DF13-5S-1.25C	536-0004-2	5	5.00	7.90	
DF13-6S-1.25C	536-0005-5	6	6.25	9.15	
DF13-7S-1.25C	536-0006-8	7	7.50	10.40	
DF13-8S-1.25C	536-0007-0	8	8.75	11.65	

Part Number	CL No.	Number of Contacts	A	B	RoHS
DF13- 9S-1.25C	536-0008-3	9	10.00	12.90	Yes
DF13-10S-1.25C	536-0009-6	10	11.25	14.15	
DF13-11S-1.25C	536-0010-5	11	12.50	15.40	
DF13-12S-1.25C	536-0011-8	12	13.75	16.65	
DF13-13S-1.25C	536-0012-0	13	15.00	17.90	
DF13-14S-1.25C	536-0013-3	14	16.25	19.15	
DF13-15S-1.25C	536-0014-6	15	17.50	20.40	

Note 1.The quantity is delivered per bag (100 pcs.). If needed, please select and order the products per bag.

■Double Row Socket

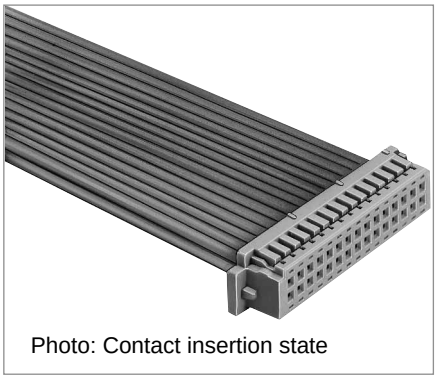

Photo: Contact insertion state

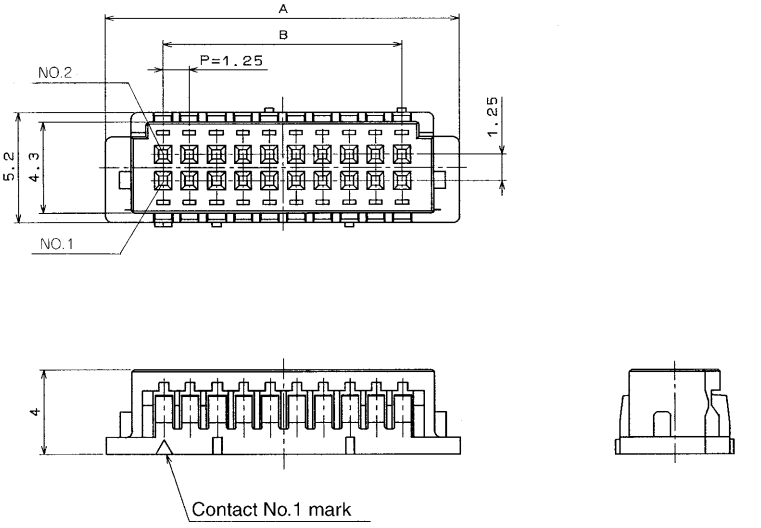

Unit: mm

Part Number	CL No.	Number of Contacts	A	B	RoHS
DF13-10DS-1.25C	536-0550-2	10	10.40	5.00	Yes
DF13-20DS-1.25C	536-0555-6	20	16.65	11.25	
DF13-30DS-1.25C	536-0560-6	30	22.90	17.50	
DF13-40DS-1.25C	536-0565-0	40	29.15	23.75	

Note:The quantity is delivered per bag (100pcs). If needed, please select and order the products per bag.

■Single Row Straight Pin Header (Through hole)

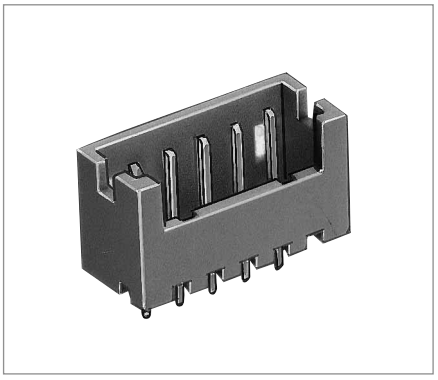

●Board Through-hole Diameter:ϕ0.6±0.03

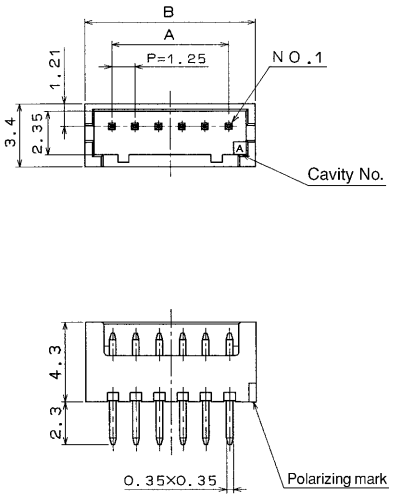

[Specific No.] – **, (**)
Blank: Tin plated
20: Tin plated, tube packaging

◆Tube Dimensions

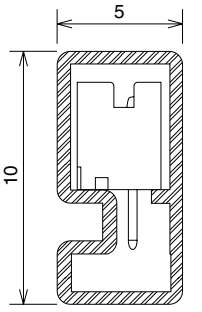

Unit: mm

Part Number	CL No.	Number of Contacts	A	B	Tube Packaging Quantity	RoHS
DF13-2P-1.25DSA(**)	536-0101-9-**	2	1.25	4.15	115	Yes
DF13-3P-1.25DSA(**)	536-0102-1-**	3	2.50	5.40	89	
DF13-4P-1.25DSA(**)	536-0103-4-**	4	3.75	6.65	72	
DF13-5P-1.25DSA(**)	536-0104-7-**	5	5.00	7.90	61	
DF13-6P-1.25DSA(**)	536-0105-0-**	6	6.25	9.15	52	
DF13-7P-1.25DSA(**)	536-0106-2-**	7	7.50	10.40	46	
DF13-8P-1.25DSA(**)	536-0107-5-**	8	8.75	11.65	41	

Part Number	CL No.	Number of Contacts	A	B	Tube Packaging Quantity	RoHS
DF13- 9P-1.25DSA(**)	536-0108-8-**	9	10.00	12.90	37	Yes
DF13-10P-1.25DSA(**)	536-0109-0-**	10	11.25	14.15	34	
DF13-11P-1.25DSA(**)	536-0110-0-**	11	12.50	15.40	31	
DF13-12P-1.25DSA(**)	536-0111-2-**	12	13.75	16.65	29	
DF13-13P-1.25DSA(**)	536-0112-5-**	13	15.00	17.90	27	
DF13-14P-1.25DSA(**)	536-0113-8-**	14	16.25	19.15	25	
DF13-15P-1.25DSA(**)	536-0114-0-**	15	17.50	20.40	23	

Note 1.The quantity at the specific No."None" is delivered per bag (100 pcs.). If needed, please select and order the products per bag.
Note 2.Order the tube packaging product, multiplying the tube packaging quantity.

■Single Row Right Angle Pin Header (Through hole)

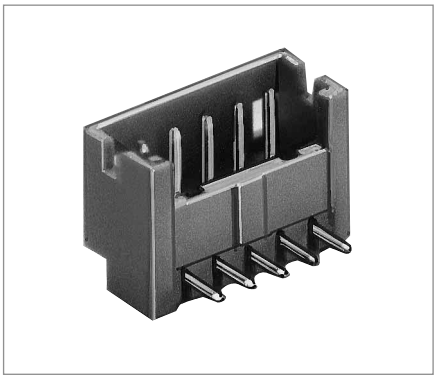

●Board Through-hole Diameter:ϕ0.6±0.03

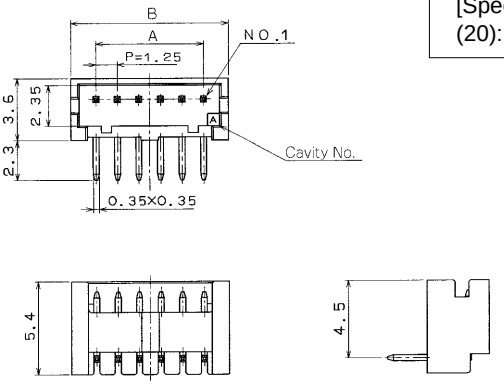

[Specific No.] – **, (***)
(20): Tin plated tube packaging

◆Tube Dimensions

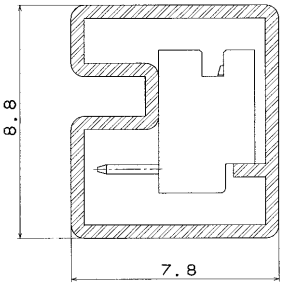

Unit: mm

Part Number	CL No.	Number of Contacts	A	B	Tube Packaging Quantity	RoHS
DF13-2P-1.25DS(20)	536-0151-7-20	2	1.25	4.15	115	Yes
DF13-3P-1.25DS(20)	536-0152-0-20	3	2.50	5.40	89	
DF13-4P-1.25DS(20)	536-0153-2-20	4	3.75	6.65	72	
DF13-5P-1.25DS(20)	536-0154-5-20	5	5.00	7.90	61	
DF13-6P-1.25DS(20)	536-0155-8-20	6	6.25	9.15	52	
DF13-7P-1.25DS(20)	536-0156-0-20	7	7.50	10.40	46	
DF13-8P-1.25DS(20)	536-0157-3-20	8	8.75	11.65	41	

Part Number	CL No.	Number of Contacts	A	B	Tube Packaging Quantity	RoHS
DF13- 9P-1.25DS(20)	536-0158-6-20	9	10.00	12.90	37	Yes
DF13-10P-1.25DS(20)	536-0159-9-20	10	11.25	14.15	34	
DF13-11P-1.25DS(20)	536-0160-8-20	11	12.50	15.40	31	
DF13-12P-1.25DS(20)	536-0161-0-20	12	13.75	16.65	29	
DF13-14P-1.25DS(20)	536-0163-6-20	14	16.25	19.15	25	
DF13-15P-1.25DS(20)	536-0164-9-20	15	17.50	20.40	23	

Note 1.Order the tube packaging product, multiplying the tube packaging quantity.

■Single Row Straight Pin Header (SMT)
(Three-Wall/Correspond to Vacuum Absorption)

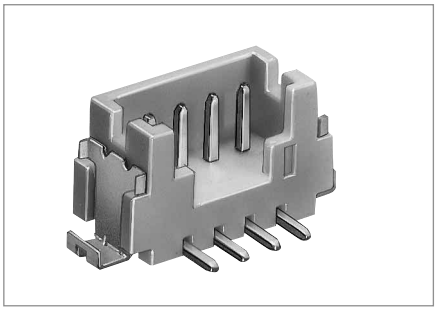

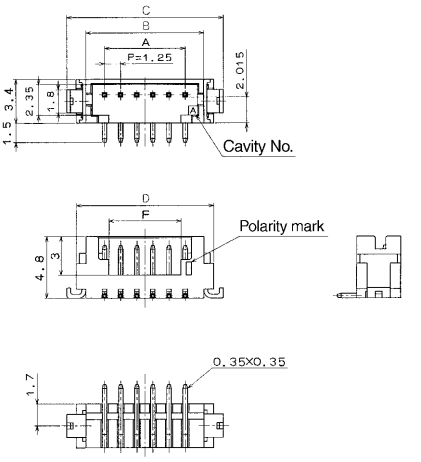

◆PCB mounting pattern

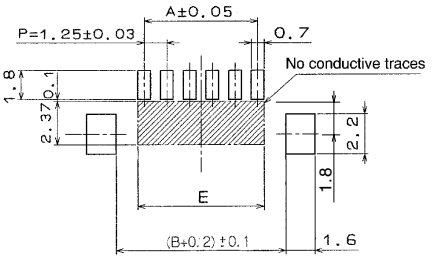

Note 1.Shaded area must be free of any electrically conductive traces to avoid contact with soldered pin header terminations.

This pin header is a three-wall type, header has sufficiently large flat areas to allow pick-up with vacuum nozzles of automatic placement equipment.

[Specific No.] – **, (**)
(21): Tin plated embossed tape packaging
(51): Gold plated embossed tape packaging

Unit: mm

Part Number	CL No.	Number of Contacts	A	B	C	D	E	F	Emboss Width	RoHS
DF13C- 2P-1.25V(**)	536-0401-2-**	2	1.25	4.15	7.15	5.65	1.95	2.20	16	
DF13C- 3P-1.25V(**)	536-0402-5-**	3	2.50	5.40	8.40	6.90	3.20	3.45	16	
DF13C- 4P-1.25V(**)	536-0403-8-**	4	3.75	6.65	9.65	8.15	4.45	3.10	24	
DF13C- 5P-1.25V(**)	536-0404-0-**	5	5.00	7.90	10.90	9.40	5.70	4.35	24	
DF13C- 6P-1.25V(**)	536-0405-3-**	6	6.25	9.15	12.15	10.65	6.95	5.60	24	
DF13C- 7P-1.25V(**)	536-0406-6-**	7	7.50	10.40	13.40	11.90	8.20	6.85	24	
DF13C- 8P-1.25V(**)	536-0407-9-**	8	8.75	11.65	14.65	13.15	9.45	8.10	24	Yes
DF13C- 9P-1.25V(**)	536-0408-1-**	9	10.00	12.90	15.90	14.40	10.70	9.35	24	
DF13C-10P-1.25V(**)	536-0409-4-**	10	11.25	14.15	17.15	15.65	11.95	10.60	24	
DF13C-11P-1.25V(**)	536-0410-3-**	11	12.50	15.40	18.40	16.90	13.20	11.85	32	
DF13C-12P-1.25V(**)	536-0411-6-**	12	13.75	16.65	19.65	18.15	14.45	13.10	32	
DF13C-14P-1.25V(**)	536-0413-1-**	14	16.25	19.15	22.15	20.65	16.95	15.60	32	
DF13C-15P-1.25V(**)	536-0414-4-**	15	17.50	20.40	23.40	21.90	18.20	16.85	44	

Note 1.Please order the embossed tape packaging product according to reel number. (1000 pcs. per reel)

■Single Row Straight Pin Header (SMT)
(Four-Wall/Correspond to Vacuum Absorption)

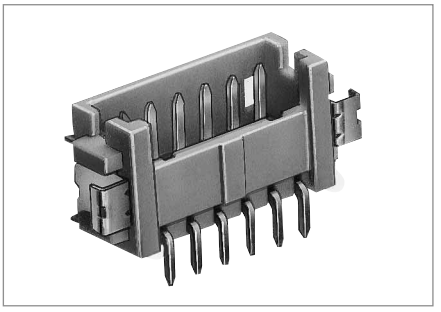

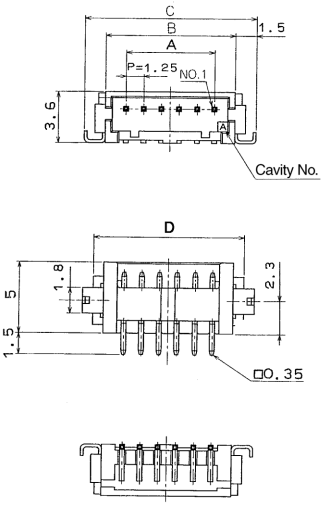

◆PCB mounting pattern

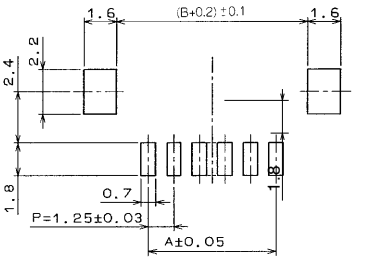

[Specific No.] – **, (**)
(21): Tin plated embossed tape packaging
(51): Gold plated embossed tape packaging

Unit: mm

Part Number	CL No.	Number of Contacts	A	B	C	D	Emboss Width	RoHS
DF13A- 2P-1.25H(**)	CL536-0301-8-**	2	1.25	4.15	7.15	5.65	16	Yes
DF13A- 3P-1.25H(**)	CL536-0302-0-**	3	2.50	5.40	8.40	6.90	16	
DF13A- 4P-1.25H(**)	CL536-0303-3-**	4	3.75	6.65	9.65	8.15	24	
DF13A- 5P-1.25H(**)	CL536-0304-6-**	5	5.00	7.90	10.90	9.40	24	
DF13A- 6P-1.25H(**)	CL536-0305-9-**	6	6.25	9.15	12.15	10.65	24	
DF13A- 7P-1.25H(**)	CL536-0306-1-**	7	7.50	10.40	13.40	11.90	24	
DF13A- 8P-1.25H(**)	CL536-0307-4-**	8	8.75	11.65	14.65	13.15	24	
DF13A- 9P-1.25H(**)	CL536-0308-7-**	9	10.00	12.90	15.90	14.40	24	
DF13A-10P-1.25H(**)	CL536-0309-0-**	10	11.25	14.15	17.15	15.65	24	
DF13A-11P-1.25H(**)	CL536-0310-9-**	11	12.50	15.40	18.40	16.90	32	
DF13A-12P-1.25H(**)	CL536-0311-1-**	12	13.75	16.65	19.65	18.15	32	
DF13A-14P-1.25H(**)	CL536-0313-7-**	14	16.25	19.15	22.15	20.65	32	
DF13A-15P-1.25H(**)	CL536-0314-0-**	15	17.50	20.40	23.40	21.90	44	

Note 1.Please order the embossed tape packaging product according to reel number. (1000 pcs. per reel)

■Double Row Straight Pin Header (SMT)
(Four-Wall/Correspond to Vacuum Absorption)



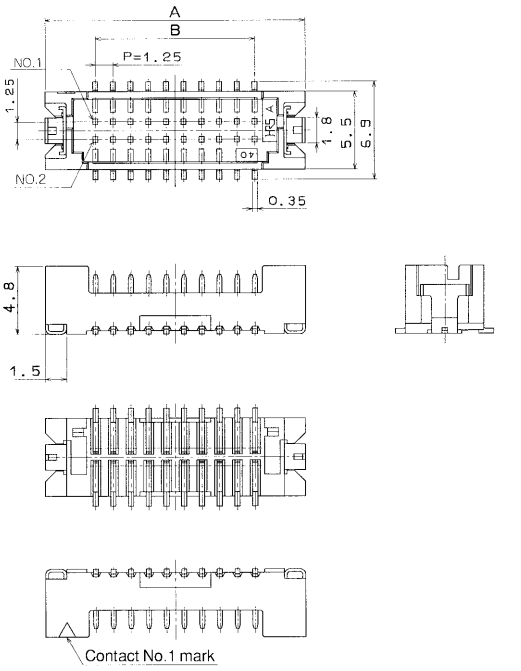

◆PCB mounting pattern

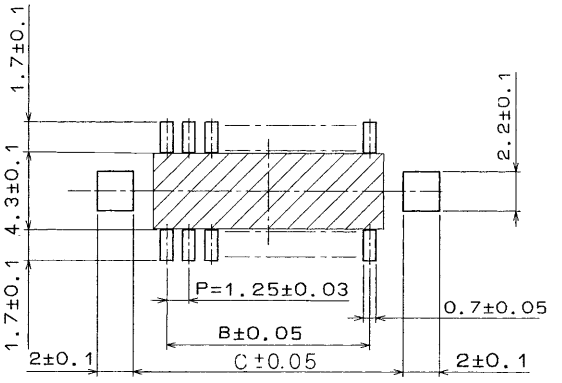

Note 1.Shaded area must be free of any electrically conductive traces to avoid contact with soldered pin header terminations.

[Specific No.] - **, (**)
(95): Tin-copper plated embossed tape packaging
(91): Gold plated embossed tape packaging

Unit: mm

Part Number	CL No.	Number of Contacts	A	B	C	Spec No. (26)	Spec No. (56)	Emboss Width	RoHS
DF13A-10DP-1.25V(**)	536-0600-9-**	10	12.10	5.00	8.70	○	○	24	Yes
DF13A-20DP-1.25V(**)	536-0605-2-**	20	18.35	11.25	14.95	○	○	32	
DF13A-30DP-1.25V(**)	536-0610-2-**	30	24.60	17.50	21.20	–	○	44	
DF13A-40DP-1.25V(**)	536-0615-6-**	40	30.85	23.75	27.45	–	○	44	

Note 1.Please order the tube packaging product, multiplying the tube packaging quantity.
Note 2.Please order the embossed tape packaging product according to reel number. (1 reel: 1000 pcs.)
Note 3.The absorption cap is attached to the embossed tape packaging product.

■Crimping Contact

Part Number	CL No.	Packaging Type	Quantity	Finish
DF13-3032SCF	536-0299-8	Reel	10,000	Tin plating
DF13-3032SCFA(04)	536-0641-6-04			Gold plating
DF13-2630SCF	536-0300-5			Tin plating
DF13-2630SCFA(04)	536-0298-5-04			Gold plating
DF13G-2630SCF	536-0643-1	Reel (Low insertion/extraction)	10,000	Tin plating
DF13G-2630SCFA	536-0642-9			Gold plating

●DF13

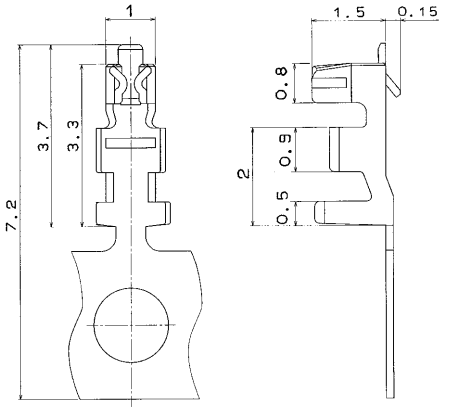

●DF13G

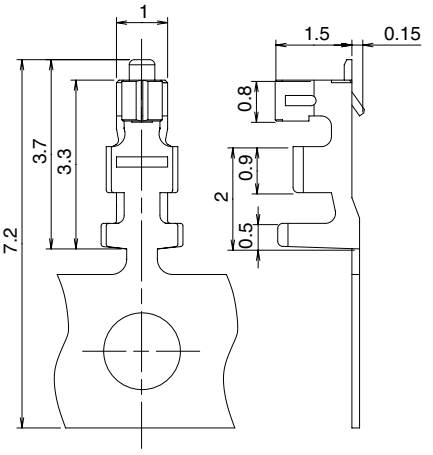

●Applicable Cable (Tin Plating Annealed Copper Wire)

Conductor Size (Wire construction)	Jacket Diameter
AWG26(7 cores./0.16mm)	ϕ0.65 to ϕ1.0mm
AWG28(7 cores./0.127mm)	
AWG30(7 cores./0.1mm)	
AWG32(7 cores./0.08mm)	

Note:If other cables are used instead of the applicable cable, please contact the Hirose sales department.

●Recommended Cable

UL1571, UL1061

●Strip Length

1.2 to 1.9mm

◆Applicable Crimping Tool

Type	Part Number	CL No.	Applicable Contact
Applicator	AP105-DF13-2630S	901-4531-9	DF13-2630SCF/SCFA
			DF13G-2630SCF/SCFA
	AP105-DF13-3032S	901-4552-9	DF13-3032SCF/SCFA
Press Main Unit	CM-105	901-0005-4	————
Manual Crimping Tool	DF13-TB2630HC	550-0256-1	DF13-2630SCF
Extraction Tool	DF-C-PO(B)	550-0179-2	DF13-2630SCF/SCFA DF13G-2630SCF/SCFA DF13-3032SCF/SCFA

Note 1.If a trouble has occurred due to other tools, which are not designated by Hirose, Hirose won't guarantee any product.
Note 2.The manual crimping tool is used to sequentially cut the reel contact with carrier.

◆Application Pattern

	SMT (Single Row Product)	Through hole (Single Row Product)	SMT (Double Row Product)
Right Angle	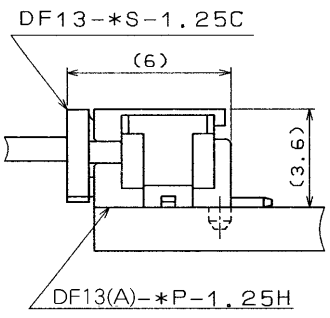	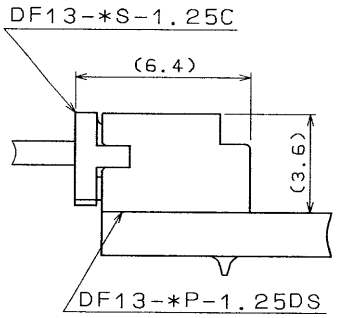	
Straight	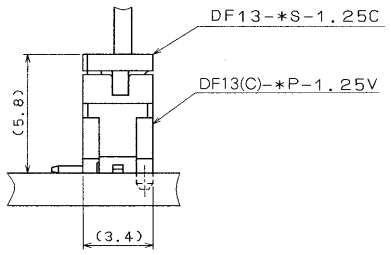	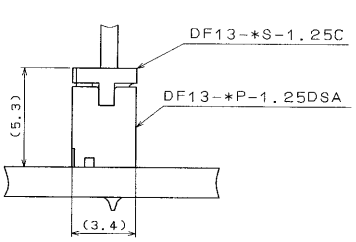	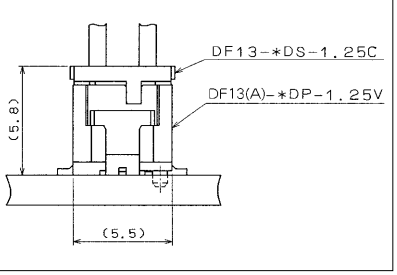

◆Embossed Carrier Tape Dimensions

●DF13B-∗P-1.25V With boss

●DF13C-∗P-1.25V Without boss

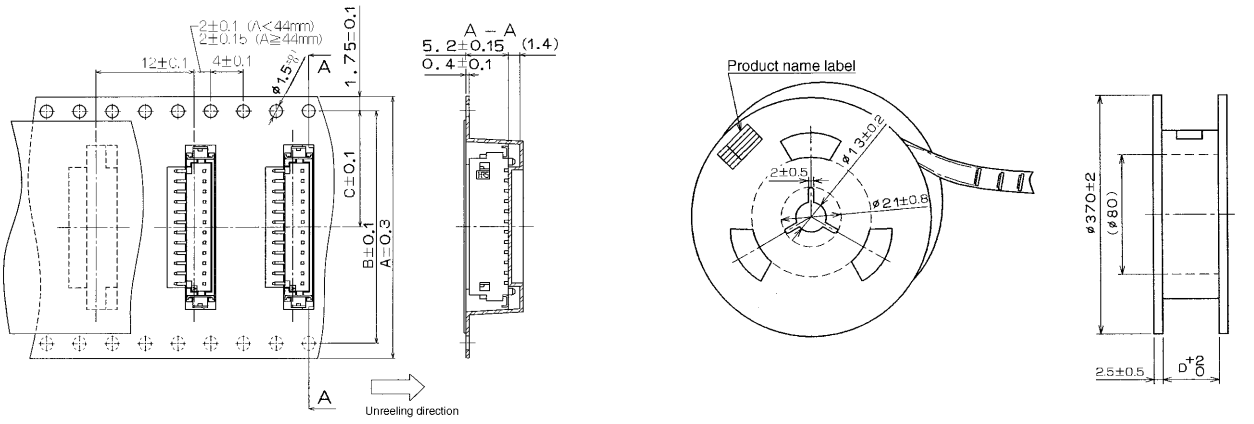

●DF13-∗P-1.25H

●DF13A-∗P-1.25H

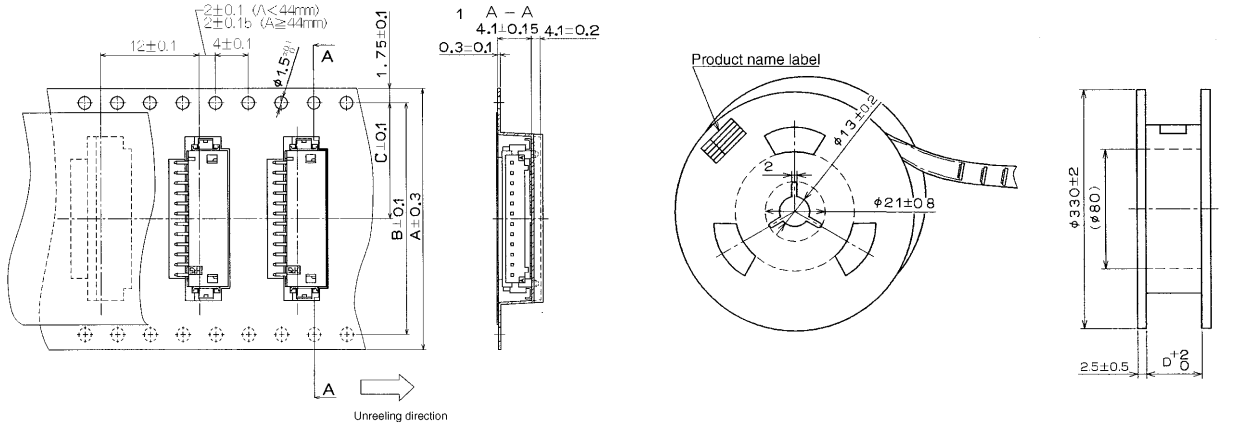

Unit: mm

Product Type	Number of Contacts	A	B	C	D
DF13B-∗P-1.25V	2, 3	16	————	7.5	16.4
DF13C-∗P-1.25V	4 to 10	24	————	11.5	24.4
DF13-∗P-1.25H	11 to 14	32	28.4	14.2	32.4
DF13A-∗P-1.25H	15	44	40.4	20.2	44.4

Note:The 13 contacts is not serialized.

◆Precautions

1. Recommended Temperature Profile (SMT)	■ DF13A-✻P-1.25H ■ DF13C-✻P-1.25V 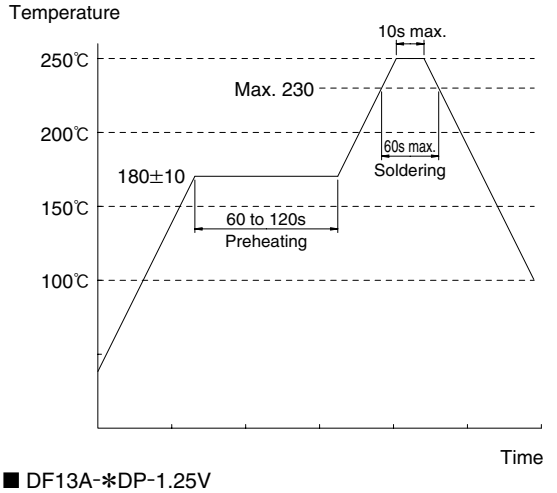 ■ DF13A-✻DP-1.25V 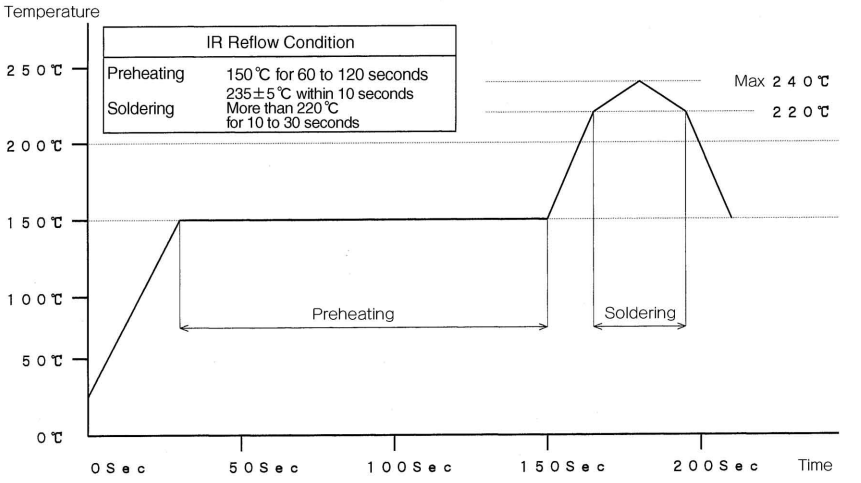 Note 1.Up to 2 cycles of Reflow soldering are possible under the same conditions, provided that there is a return to normal temperature between the first and second cycle. Note 2.The temperature profile indicates the board surface temperature at the point of contacts with the connector terminals. Note 3.Slight variations in color of the plastic compounds do not affect form, fit or function of the connector.
2. Recommended Soldering Condition (SMT)	Manual soldering: 290±10℃ for 2 seconds max.
3. Recommended Screen Thickness (SMT)	0.15 to 0.2mm
4. Board Warpage (SMT)	Max 0.03mm in the connector center area, based on both connector edges
5. Recommended Soldering Condition (Through hole)	Flow: 250±5℃ for 3 seconds Manual soldering: 290±10℃ for 2 seconds
6. Cleaning Condition	Refer to Nylon Connector Use Hand book.
7. Connection Condition	Refer to Nylon Connector Use Hand book. ■Carefully carry out the crimping operation according to "Crimping Condition Sheet" and "Crimping Quality Standard", because the crimping contact is an extremely small style.
8. Cautions	■Be careful for the excessive scoop insertion/extraction, which will cause damage to the product.
9. Precautions	Refer to Nylon Connector Use Hand book.

Precautions

<Precautions at Time of Insertion>

Align with the connector form and press down continue pressing until there is a tactile click.

Handing

Method: Lightly grasping the base the cable, press the connector with your finger and insert it.

Insertion Angle

Caution: Do not insert at an angle of 30° or greater. Doing so will cause contact deformation or case damage.

Method: Insert with the connector parallel.

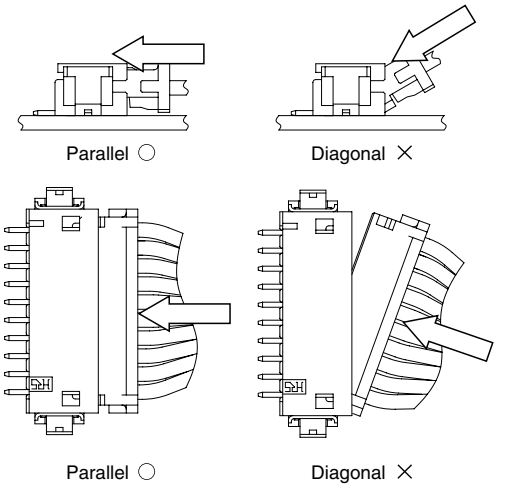

<Precautions at Time of Disconnection>

Align with the connector form and press down continue pressing until there is a tactile click.

Handing

Method: Grasp the cable so that the entire cable is pulled evenly and it out.

Angle of Removal

Caution: Do not remove at an angle of 30° or greater. Doing so will cause contact deformation or case damage.

Method: Remove with the connector parallel.

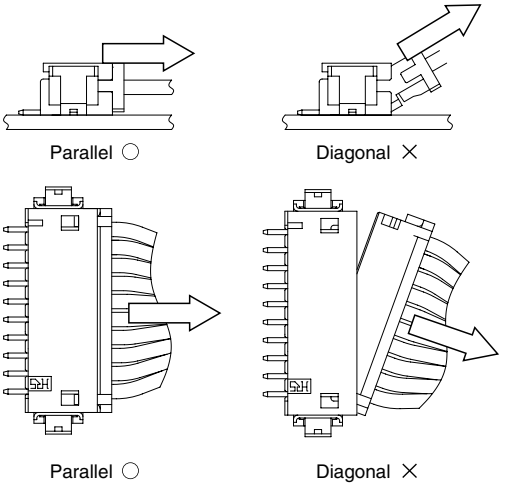

Mouser Electronics

Authorized Distributor

Click to View Pricing, Inventory, Delivery & Lifecycle Information:

Hirose Electric:

DF13-TB2630HC/US1-DS DF13-TB2630HC AP105-DF13-2630S AP105-DF13-2630S(61) AP105-DF13-2630S(62) AP105-DF13-2630S(63) AP105-DF13-2630S(64) AP105-DF13-2630S(65) AP105-DF13-2630S(66) DF13-TB2630HC/US1-DSDIE SET DF13-10DS-1.25C DF13-10P-1.25DS(20) DF13-10P-1.25DSA DF13-10S-1.25C DF13-11P-1.25DS(20) DF13-11P-1.25DSA DF13-12P-1.25DS(20) DF13-12P-1.25DSA DF13-12S-1.25C DF13-13P-1.25DSA DF13-14P-1.25DS(20) DF13-14P-1.25DSA DF13-14S-1.25C DF13-15P-1.25DS(20) DF13-15P-1.25DSA DF13-20DS-1.25C DF13-2630SCF DF13-2630SCFA DF13-2P-1.25DS(20) DF13-2P-1.25DSA DF13-2S-1.25C DF13-30DS-1.25C DF13-3P-1.25DS(20) DF13-3P-1.25DSA DF13-3S-1.25C DF13-40DS-1.25C DF13-4P-1.25DS(20) DF13-4P-1.25DSA DF13-4S-1.25C DF13-5P-1.25DS(20) DF13-5P-1.25DSA DF13-5S-1.25C DF13-6P-1.25DS(20) DF13-6P-1.25DSA DF13-6S-1.25C DF13-7P-1.25DS(20) DF13-7P-1.25DSA DF13-7S-1.25C DF13-8P-1.25DS(20) DF13-8P-1.25DSA DF13-8S-1.25C DF13-9P-1.25DS(20) DF13-9P-1.25DSA DF13-9S-1.25C DF13C-10P-1.25V(21) DF13C-10P-1.25V(51) DF13C-11P-1.25V(21) DF13C-11P-1.25V(51) DF13C-12P-1.25V(21) DF13C-12P-1.25V(51) DF13C-14P-1.25V(21) DF13C-14P-1.25V(51) DF13C-15P-1.25V(21) DF13C-15P-1.25V(51) DF13C-2P-1.25V(21) DF13C-2P-1.25V(51) DF13C-3P-1.25V(21) DF13C-3P-1.25V(51) DF13C-4P-1.25V(21) DF13C-4P-1.25V(51) DF13C-5P-1.25V(21) DF13C-5P-1.25V(51) DF13C-6P-1.25V(21) DF13C-6P-1.25V(51) DF13C-7P-1.25V(21) DF13C-7P-1.25V(51) DF13C-8P-1.25V(21) DF13C-8P-1.25V(51) DF13C-9P-1.25V(21) DF13C-9P-1.25V(51) DF13-TB2630HC/US1 DF13-5S-1.25C(41) DF13-10S-1.25C(16) DF13-11S-1.25C DF13-13S-1.25C DF13-15S-1.25C DF13B-2P-1.25V(20) DF13B-2P-1.25V(21) DF13B-2P-1.25V(50) DF13B-2P-1.25V(51) DF13B-3P-1.25V(20) DF13B-3P-1.25V(21) DF13B-3P-1.25V(50) DF13B-3P-1.25V(51) DF13B-3P-1.25V(77) DF13B-4P-1.25V(20) DF13B-4P-1.25V(21) DF13B-4P-1.25V(50) DF13B-4P-1.25V(51) DF13B-5P-1.25V(20)