DEVR10
Electric Vehicle Contactor



- High current and high voltage capability
- Compact structure - Low noise
- Magnetic arc blowout
- Max 900VDC @ 100A
- Reliable contacts in inert gas
- No special installation required
- RoHS Compliant

Contacts		
Contact number & arrangement		SPST-NO (1NO)
Contact material		$AgSnO_2$
Max. switching voltage		900VDC
Min. switching voltage		12VDC
Min. switching current		100mA
Rated continuous current		100A * [1] (voltage dependant)
Max. switching current		200A (3 mins) #8 AWG (8.4mm²) wire, at +40°C
Max. short circuit current		1250A (1/2 sine, 50/60Hz)
Voltage drop		≤80mV@100A)
Coil		
Rated voltage		12 ~ 72VDC
Operating range of supply voltage		See coil data 'Table 1'
Rated coil power consumption		5.5 ~ 6.0W
Insulation		
Insulation resistance (Initial / End of Life)		100MΩ / 50MΩ at 500VDC
Dielectric strength		
	coil - contact	2,000Vrms / 4000VDC
	contact - contact	5,600Vrms / 8000VDC
General Data		
Operating time	mS	≤ 25ms. (includes bounce time - 5ms max)
Release time	mS	≤ 20ms.
Electrical Life	ops	50,000 @ 50A/400VDC : 6000 @ 100A/400VDC
Mechanical life	ops	1 x 10^6
Dimensions	L x W x H	53.85 x 40 x 52.41mm (see drawings for detail)
Weight		190g ±2g
Ambient Temperature	operating / storage	-40 to +85°C
Shock resistance		20G, 11ms ½ sine, peak
Vibration resistance		20G, sine, peak (55~2,000 Hz)
Noise (at 100mm)		70dB(a)

* Consult factory for higher current capabilities
[1] Recommended wire - #8AWG (8.4mm²)
[2] Failure to observe correct polarity for load terminal connections will result in degraded life.

American Electronic Components Inc., 1101 Lafayette St. Elkhart, IN46516
www.durakoolrelays.com Sales Department Tel: +1 574 295 6330 Toll: (888) 847 6552
Specifications are subject to change without notice. E&OE.

DEVR10
Electric Vehicle Contactor

Coil Data - DEVR10 Table 1

Coil Voltage Code	Nominal Voltage (VDC)	Must Operate Voltage Max. (VDC)		Maximum Allowable Voltage (VDC)	Must Release Voltage Min. (VDC)	Coil-Resistance (Ω ± 5% @ 20°C)	Coil Current (mA)	Coil Power (W @ 20°C)
		20°C	85°C					
1012	12	8	9.6	16	1.2	26	461	5.5
1024	24	18	19.2	28	2.4	96	250	6.0
1028	28	21	22.4	31	2.24	136	206	5.7
1048	48	33	38.4	52	4.8	392	122	6.0
1072	72	21	55.2	79	5.76	868	83	6.0

Ordering Codes

D	E	V	R	1	0	-	5	0	6	1	-	S	8	-					-		

Contact Material

50 - $AgSnO_2$

Contact Arrangement

61 - SPST-NO, Polarity conscious

Cover Protection and Mounting

S - Flange mount on base

Connection Mode

8 - M5 Stud

Coil Code

See Coil Table 1

Coil Wire Length

R - 400mm

Other lengths available

Coil Wire Termination

1 - None

Other terminations to special order

Notes:

1) Spring Washers are an essential requirement for installation - see Page 3.
2) Torque setting for the M5 Power Terminals is 3.4 to 4.5Nm.
3) Loose terminals will generate excessive heat leading to premature failure and risk of fire.
4) The maximum torque setting for the M4 mounting bolts (not supplied) is 2.3Nm. to avoid damage to the contactor body.
6) Please ensure the correct polarity of the wiring to the power terminals. Contact life is greatly reduced if incorrectly connected.
7) Contact ratings are with #8 AWG wire.
8) Ensure adequate circuit protection in case of contact malfunction.
9) The contact chamber contains an inert gas. For maximum life, do not exceed the ambient temperature range of -40 to +85°C.
10) Contact ratings are based upon a resistive load. For inductive loads an inrush protection device is recommended.

DEVR10
Electric Vehicle Contactor

DURAKOOL

Estimated life — Fig. 1

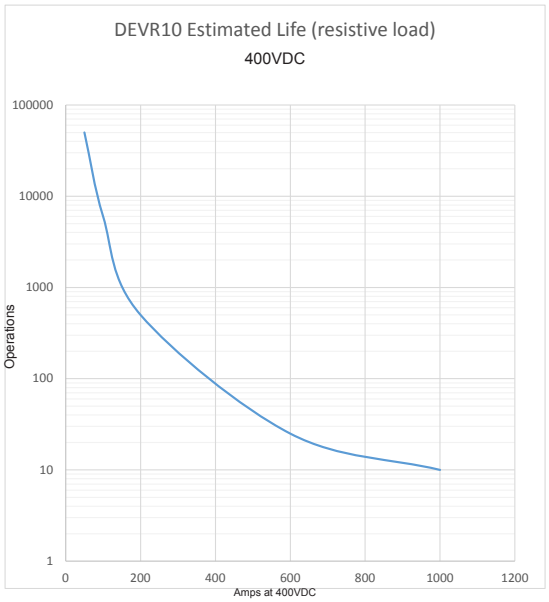

Overall Dimensions — Fig. 2

Important:
Observe correct polarity for load terminals

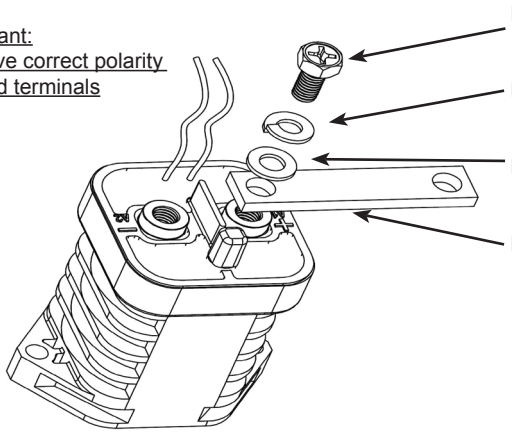

Correct sequence for power terminal hardware assembly

NB: Hardware is NOT supplied with the contactor.

NB: Hardware is NOT supplied with the contactor.

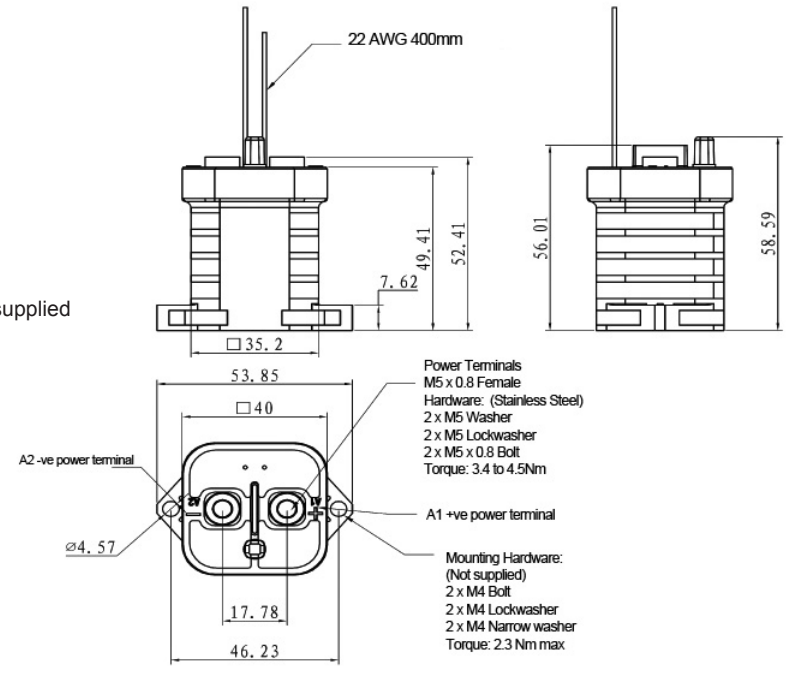

All dimensions in millimeters

DURAKOOL
Specifications are subject to change without notice. E&OE.