DEM-OPA-MSOP-2B Demonstration Fixture

1 Description

The DEM-OPA-MSOP-2B demonstration fixture is a generic, unpopulated printed circuit board (PCB) for dual high-speed operational amplifiers in MSOP-10 packages. Figure 1 shows the package pinout for this PCB. For more information on these op amps, as well as good PCB layout techniques, see the individual amplifier data sheets.

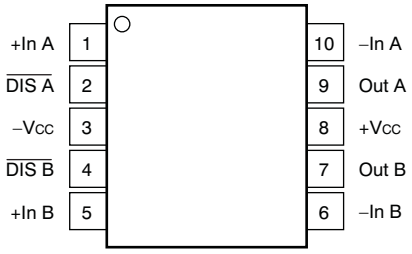

Figure 1. MSOP Package Pinout, Top View

All trademarks are the property of their respective owners.

2 Circuit

The circuit schematic in Figure 2 shows the connections for all possible components. Each configuration uses only some of the components.

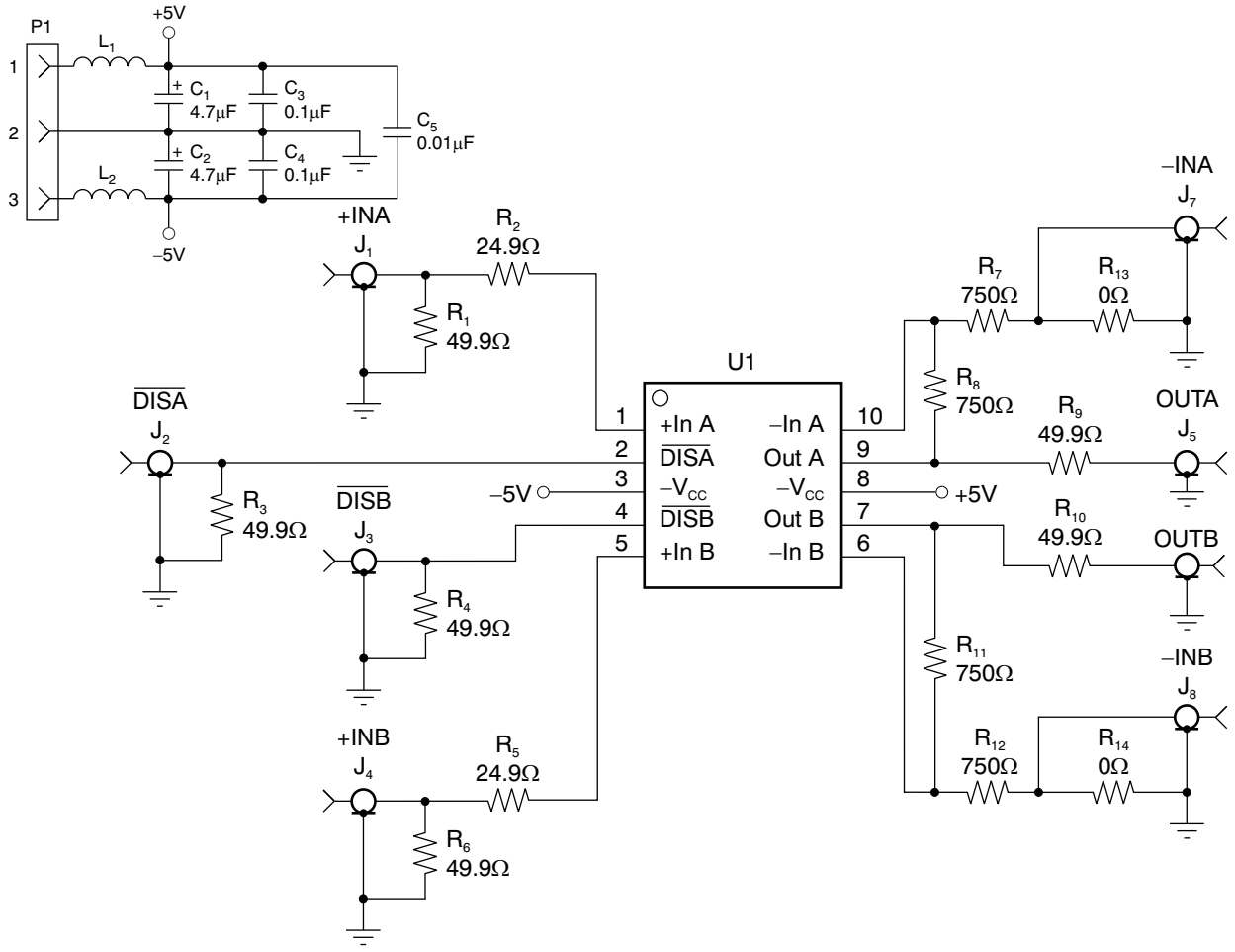

Figure 2. Schematic for DEM-OPA-MSOP-2B

3 Components

Components that have RF performance similar to the ones listed in Table 1 may be substituted.

Table 1. Component Descriptions

PART	DESCRIPTION
C_1, C_2	Tantalum Chip Capacitor, SMA EIA Size 3216, 20V
C_5, C_3, C_4	Multilayer Ceramic Chip Capacitor, SMD 0603, 25V
+INA, +INB, –INA, –INB, OUTA, OUTB, $\overline{DISA}$, $\overline{DISB}$	SMA or SMB Board Jack (Amphenol 901-144-8)
L_1 , L_2	EMI-suppression ferrite chip, SMD 0805 (Steward LI 0805 B 900 R)
P_1	Terminal block, 3.5mm centers (On-Shore Technology ED555/3DS)
R_1 – R_6, R_9, R_{12} – R_{14}	Metal film chip resistor, SMD 0603, 1/8W
R_7, R_8, R_{10}, R_{11}	Metal film chip resistor, SMD 0402, 1/16W

The location of the following components is illustrated in Figure 3. R_1 and R_2 are the input resistance matching the source impedance for each amplifier. R_2 and R_5 are series isolation resistance that may help isolate the input parasitic from the source. R_3 and R_4 are input resistance matching for the disable line. R_7 and R_9 are the gain resistors. Note that in order to have a noninverting configuration, R_{13} and R_{14} need to be 0Ω. If an inverting configuration is desired, R_{13} and R_{14} are the matching input resistance with R_1 and R_2 set at 0Ω. R_8 and R_{11} are the feedback resistors. R_9 and R_{10} are output matching resistance and should be set to 50Ω for a 50Ω environement. L_1 and L_2 are ferrite chips that can reduce interactions with the power supply at high frequencies; if not desired, they can be replaced with 0Ω resistors. The power supplies are each respectively bypassed with two capacitors: C_1 and C_3 for the positive supply, and C_2 and C_4 for the negative supply. C_4 and C_5 are usually set between 2.2µF and 6.8µF, where C_2 and C_3 are 0.1µF ceramic capacitors. C_5, usually set at 10nF, is connected between the positive and negative power supplies.

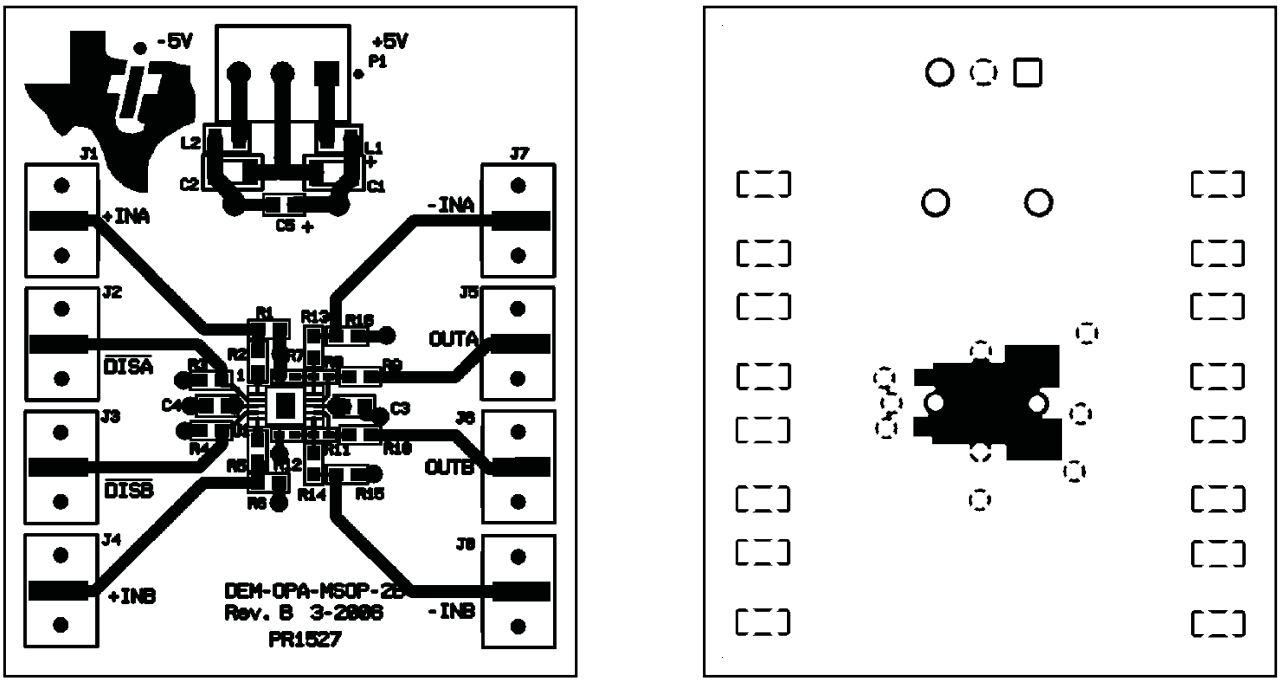

(a) Top Layer

(b) Mid Layer

(c) Bottom Layer

Figure 3. DEM-OPA-MSOP-2B Demonstration Fixture Layout

4 Board Layout

This demonstration fixture is a four-layer PCB. The ground plane has been opened up around op amp pins that are sensitive to capacitive loading. Power-supply traces are laid out to keep current loop areas to a minimum. The SMA (or SMB) connectors may be mounted either vertically or horizontally onto the board edge. The location and type of capacitors used for power-supply bypassing are crucial to high-frequency amplifiers. The tantalum capacitors, C_1 and C_2, do not need to be as close to pins 3 and 8 on the PCB and may be shared with other amplifiers. See the individual op amp data sheets for more information on proper board layout techniques and component selection.

5 Measurement Tips

This demonstration fixture, with the component values shown, is designed to operate in a 50Ω environment; most data sheet plots are obtained under these conditions. It is easy to change the component values for different input and output impedance levels. However, do not use high-impedance probes; they represent a heavy capacitive load to the operational amplifier, and will alter the amplifier response. Instead, use low-impedance (≤ 500Ω) probes with adequate bandwidth. The probe input capacitance and resistance set an upper limit on the measurement bandwidth. If a high-impedance probe must be used, place a 100Ω resistor on the probe tip to isolate its capacitance from the circuit.

FCC Warning

This evaluation board/kit is intended for use for **ENGINEERING DEVELOPMENT, DEMONSTRATION, OR EVALUATION PURPOSES ONLY** and is not considered by TI to be a finished end-product fit for general consumer use. It generates, uses, and can radiate radio frequency energy and has not been tested for compliance with the limits of computing devices pursuant to part 15 of FCC rules, which are designed to provide reasonable protection against radio frequency interference. Operation of this equipment in other environments may cause interference with radio communications, in which case the user at his own expense will be required to take whatever measures may be required to correct this interference.

EVALUATION BOARD/KIT IMPORTANT NOTICE

Texas Instruments (TI) provides the enclosed product(s) under the following conditions:

This evaluation board/kit is intended for use for **ENGINEERING DEVELOPMENT, DEMONSTRATION, OR EVALUATION PURPOSES ONLY** and is not considered by TI to be a finished end-product fit for general consumer use. Persons handling the product(s) must have electronics training and observe good engineering practice standards. As such, the goods being provided are not intended to be complete in terms of required design-, marketing-, and/or manufacturing-related protective considerations, including product safety and environmental measures typically found in end products that incorporate such semiconductor components or circuit boards. This evaluation board/kit does not fall within the scope of the European Union directives regarding electromagnetic compatibility, restricted substances (RoHS), recycling (WEEE), FCC, CE or UL, and therefore may not meet the technical requirements of these directives or other related directives.

Should this evaluation board/kit not meet the specifications indicated in the User's Guide, the board/kit may be returned within 30 days from the date of delivery for a full refund. THE FOREGOING WARRANTY IS THE EXCLUSIVE WARRANTY MADE BY SELLER TO BUYER AND IS IN LIEU OF ALL OTHER WARRANTIES, EXPRESSED, IMPLIED, OR STATUTORY, INCLUDING ANY WARRANTY OF MERCHANTABILITY OR FITNESS FOR ANY PARTICULAR PURPOSE.

The user assumes all responsibility and liability for proper and safe handling of the goods. Further, the user indemnifies TI from all claims arising from the handling or use of the goods. Due to the open construction of the product, it is the user's responsibility to take any and all appropriate precautions with regard to electrostatic discharge.

EXCEPT TO THE EXTENT OF THE INDEMNITY SET FORTH ABOVE, NEITHER PARTY SHALL BE LIABLE TO THE OTHER FOR ANY INDIRECT, SPECIAL, INCIDENTAL, OR CONSEQUENTIAL DAMAGES.

TI currently deals with a variety of customers for products, and therefore our arrangement with the user **is not exclusive.**

TI assumes **no liability for applications assistance, customer product design, software performance, or infringement of patents or services described herein.**

Please read the User's Guide and, specifically, the Warnings and Restrictions notice in the User's Guide prior to handling the product. This notice contains important safety information about temperatures and voltages. For additional information on TI's environmental and/or safety programs, please contact the TI application engineer or visit www.ti.com/esh.

No license is granted under any patent right or other intellectual property right of TI covering or relating to any machine, process, or combination in which such TI products or services might be or are used.

EVM WARNINGS AND RESTRICTIONS

It is important to operate this EVM within the input voltage range of ±15V and the output voltage range of –15V to +15V.

Exceeding the specified input range may cause unexpected operation and/or irreversible damage to the EVM. If there are questions concerning the input range, please contact a TI field representative prior to connecting the input power.

Applying loads outside of the specified output range may result in unintended operation and/or possible permanent damage to the EVM. Please consult the EVM User's Guide prior to connecting any load to the EVM output. If there is uncertainty as to the load specification, please contact a TI field representative.

During normal operation, some circuit components may have case temperatures greater than +50°C. The EVM is designed to operate properly with certain components above +50°C as long as the input and output ranges are maintained. These components include but are not limited to linear regulators, switching transistors, pass transistors, and current sense resistors. These types of devices can be identified using the EVM schematic located in the EVM User's Guide. When placing measurement probes near these devices during operation, please be aware that these devices may be very warm to the touch.

Mailing Address: Texas Instruments, Post Office Box 655303, Dallas, Texas 75265
Copyright © 2006, Texas Instruments Incorporated

IMPORTANT NOTICE

Texas Instruments Incorporated and its subsidiaries (TI) reserve the right to make corrections, modifications, enhancements, improvements, and other changes to its products and services at any time and to discontinue any product or service without notice. Customers should obtain the latest relevant information before placing orders and should verify that such information is current and complete. All products are sold subject to TI's terms and conditions of sale supplied at the time of order acknowledgment.

TI warrants performance of its hardware products to the specifications applicable at the time of sale in accordance with TI's standard warranty. Testing and other quality control techniques are used to the extent TI deems necessary to support this warranty. Except where mandated by government requirements, testing of all parameters of each product is not necessarily performed.

TI assumes no liability for applications assistance or customer product design. Customers are responsible for their products and applications using TI components. To minimize the risks associated with customer products and applications, customers should provide adequate design and operating safeguards.

TI does not warrant or represent that any license, either express or implied, is granted under any TI patent right, copyright, mask work right, or other TI intellectual property right relating to any combination, machine, or process in which TI products or services are used. Information published by TI regarding third-party products or services does not constitute a license from TI to use such products or services or a warranty or endorsement thereof. Use of such information may require a license from a third party under the patents or other intellectual property of the third party, or a license from TI under the patents or other intellectual property of TI.

Reproduction of information in TI data books or data sheets is permissible only if reproduction is without alteration and is accompanied by all associated warranties, conditions, limitations, and notices. Reproduction of this information with alteration is an unfair and deceptive business practice. TI is not responsible or liable for such altered documentation.

Resale of TI products or services with statements different from or beyond the parameters stated by TI for that product or service voids all express and any implied warranties for the associated TI product or service and is an unfair and deceptive business practice. TI is not responsible or liable for any such statements.

TI products are not authorized for use in safety-critical applications (such as life support) where a failure of the TI product would reasonably be expected to cause severe personal injury or death, unless officers of the parties have executed an agreement specifically governing such use. Buyers represent that they have all necessary expertise in the safety and regulatory ramifications of their applications, and acknowledge and agree that they are solely responsible for all legal, regulatory and safety-related requirements concerning their products and any use of TI products in such safety-critical applications, notwithstanding any applications-related information or support that may be provided by TI. Further, Buyers must fully indemnify TI and its representatives against any damages arising out of the use of TI products in such safety-critical applications.

TI products are neither designed nor intended for use in military/aerospace applications or environments unless the TI products are specifically designated by TI as military-grade or "enhanced plastic." Only products designated by TI as military-grade meet military specifications. Buyers acknowledge and agree that any such use of TI products which TI has not designated as military-grade is solely at the Buyer's risk, and that they are solely responsible for compliance with all legal and regulatory requirements in connection with such use.

TI products are neither designed nor intended for use in automotive applications or environments unless the specific TI products are designated by TI as compliant with ISO/TS 16949 requirements. Buyers acknowledge and agree that, if they use any non-designated products in automotive applications, TI will not be responsible for any failure to meet such requirements.

Following are URLs where you can obtain information on other Texas Instruments products and application solutions:

Products		**Applications**	
Amplifiers	amplifier.ti.com	Audio	www.ti.com/audio
Data Converters	dataconverter.ti.com	Automotive	www.ti.com/automotive
DSP	dsp.ti.com	Broadband	www.ti.com/broadband
Interface	interface.ti.com	Digital Control	www.ti.com/digitalcontrol
Logic	logic.ti.com	Military	www.ti.com/military
Power Mgmt	power.ti.com	Optical Networking	www.ti.com/opticalnetwork
Microcontrollers	microcontroller.ti.com	Security	www.ti.com/security
RFID	www.ti-rfid.com	Telephony	www.ti.com/telephony
Low Power Wireless	www.ti.com/lpw	Video & Imaging	www.ti.com/video
		Wireless	www.ti.com/wireless

Mailing Address: Texas Instruments, Post Office Box 655303, Dallas, Texas 75265
Copyright © 2007, Texas Instruments Incorporated