5-TAP, TTL-INTERFACED FIXED DELAY LINE (SERIES DDU66F)

FEATURES

- Five equally spaced outputs
- Fits standard 14-pin DIP socket
- Low profile
- Auto-insertable
- Input & outputs fully TTL interfaced & buffered
- 10 T^2L fan-out capability

PACKAGES

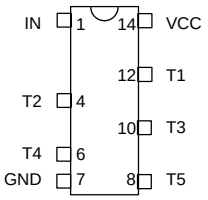

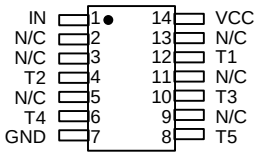

DDU66F-xx	DIP	DDU66F-xxD1	Com. SMD
DDU66F-xxA2	Gull-Wing	DDU66F-xxD4	Com. SMD
DDU66F-xxB2	J-Lead	DDU66F-xxMD1	Mil. SMD
DDU66F-xxME7	Military DIP	DDU66F-xxMD4	Mil. SMD

FUNCTIONAL DESCRIPTION

The DDU66F-series device is a 5-tap digitally buffered delay line. The signal input (IN) is reproduced at the outputs (T1-T5), shifted in time by an amount given by the device dash number. For dash numbers less than 25, the total delay of the line is measured from T1 to T5, with the nominal value given by the dash number. The nominal tap-to-tap delay increment is given by 1/4 of this number. The inherent delay from IN to T1 is nominally 3.5ns. For dash numbers greater than or equal to 25, the total delay of the line is measured from IN to T5, with the nominal value given by the dash number. The nominal tap-to-tap delay increment is given by 1/5 of this number.

PIN DESCRIPTIONS

IN	Signal Input
T1-T5	Tap Outputs
VCC	+5 Volts
GND	Ground

SERIES SPECIFICATIONS

- **Minimum input pulse width:** 40% of total delay
- **Output rise time:** 2ns typical
- **Supply voltage:** 5VDC ± 5%
- **Supply current:** I_{CCL} = 32ma typical
  I_{CCH} = 7ma typical
- **Operating temperature:** 0° to 70° C
- **Temp. coefficient of total delay:** 100 PPM/°C

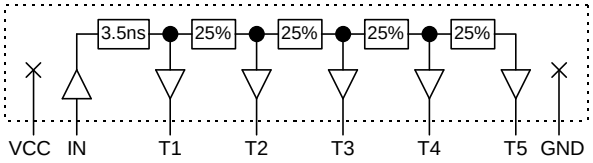

Functional diagram for dash numbers < 25

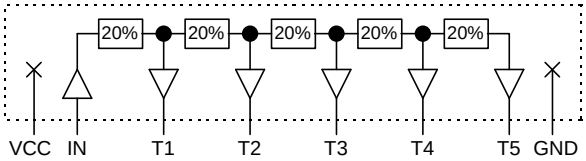

Functional diagram for dash numbers >= 25

©1997 Data Delay Devices

DASH NUMBER SPECIFICATIONS

Part Number	Total Delay (ns)	Delay Per Tap (ns)
DDU66F-4	4 ± 1.0 *	1.0 ± 0.5
DDU66F-6	6 ± 1.0 *	1.5 ± 0.5
DDU66F-8	8 ± 2.0 *	2.0 ± 1.0
DDU66F-10	10 ± 2.0 *	2.5 ± 1.0
DDU66F-12	12 ± 2.0 *	3.0 ± 1.0
DDU66F-16	16 ± 2.0 *	4.0 ± 1.5
DDU66F-20	20 ± 3.0 *	5.0 ± 1.5
DDU66F-25	25 ± 3.0	5.0 ± 2.0
DDU66F-30	30 ± 3.0	6.0 ± 2.0
DDU66F-35	35 ± 3.0	7.0 ± 2.0
DDU66F-40	40 ± 3.0	8.0 ± 2.0
DDU66F-45	45 ± 3.0	9.0 ± 3.0
DDU66F-50	50 ± 3.0	10.0 ± 3.0
DDU66F-60	60 ± 3.0	12.0 ± 3.0
DDU66F-75	75 ± 4.0	15.0 ± 3.0
DDU66F-100	100 ± 5.0	20.0 ± 3.0
DDU66F-125	125 ± 6.5	25.0 ± 3.0
DDU66F-150	150 ± 7.5	30.0 ± 3.0
DDU66F-175	175 ± 8.0	35.0 ± 4.0
DDU66F-200	200 ± 10.0	40.0 ± 4.0
DDU66F-250	250 ± 12.5	50.0 ± 5.0

*** Total delay is referenced to first tap output**
Input to first tap = 3.5ns ± 1ns

NOTE: Any dash number between 4 and 250 not shown is also available

APPLICATION NOTES

HIGH FREQUENCY RESPONSE

The DDU66F tolerances are guaranteed for input pulse widths and periods greater than those specified in the test conditions. Although the device will function properly for pulse widths as small as 40% of the total delay and periods as small as 80% of the total delay (for a symmetric input), the delays may deviate from their values at low frequency. However, for a given input condition, the deviation will be repeatable from pulse to pulse. Contact technical support at Data Delay Devices if your application requires device testing at a specific input condition.

POWER SUPPLY BYPASSING

The DDU66F relies on a stable power supply to produce repeatable delays within the stated tolerances. A 0.1uf capacitor from VCC to GND, located as close as possible to the VCC pin, is recommended. A wide VCC trace and a clean ground plane should be used.

DEVICE SPECIFICATIONS

TABLE 1: ABSOLUTE MAXIMUM RATINGS

PARAMETER	SYMBOL	MIN	MAX	UNITS	NOTES
DC Supply Voltage	V_{CC}	-0.3	7.0	V	
Input Pin Voltage	V_{IN}	-0.3	V_{CC}+0.3	V	
Storage Temperature	T_{STRG}	-55	150	C	
Lead Temperature	T_{LEAD}		300	C	10 sec

TABLE 2: DC ELECTRICAL CHARACTERISTICS

(0C to 70C, 4.75V to 5.25V)

PARAMETER	SYMBOL	MIN	TYP	MAX	UNITS	NOTES
High Level Output Voltage	V_{OH}	2.5	3.4		V	V_{CC} = MIN, I_{OH} = MAX V_{IH} = MIN, V_{IL} = MAX
Low Level Output Voltage	V_{OL}		0.35	0.5	V	V_{CC} = MIN, I_{OL} = MAX V_{IH} = MIN, V_{IL} = MAX
High Level Output Current	I_{OH}			-1.0	mA	
Low Level Output Current	I_{OL}			20.0	mA	
High Level Input Voltage	V_{IH}	2.0			V	
Low Level Input Voltage	V_{IL}			0.8	V	
Input Clamp Voltage	V_{IK}			-1.2	V	V_{CC} = MIN, I_I = I_{IK}
Input Current at Maximum Input Voltage	I_{IHH}			0.1	mA	V_{CC} = MAX, V_I = 7.0V
High Level Input Current	I_{IH}			20	µA	V_{CC} = MAX, V_I = 2.7V
Low Level Input Current	I_{IL}			-0.6	mA	V_{CC} = MAX, V_I = 0.5V
Short-circuit Output Current	I_{OS}	-60		-150	mA	V_{CC} = MAX
Output High Fan-out				25	Unit	
Output Low Fan-out				12.5	Load	

PACKAGE DIMENSIONS

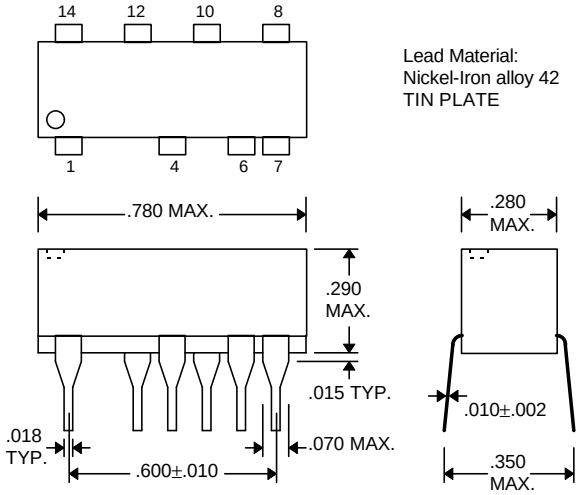

DDU66F-xx (Commercial)

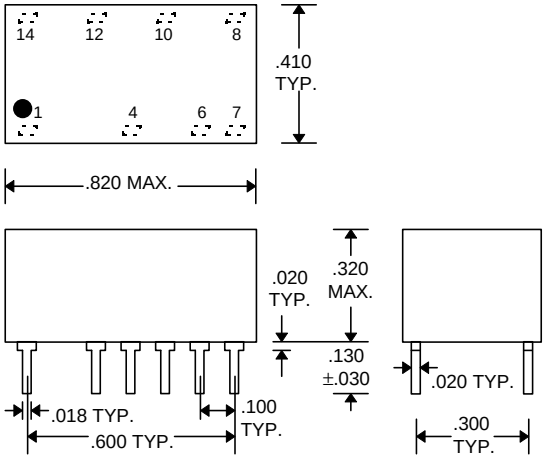

DDU66F-xxME7 (Military)

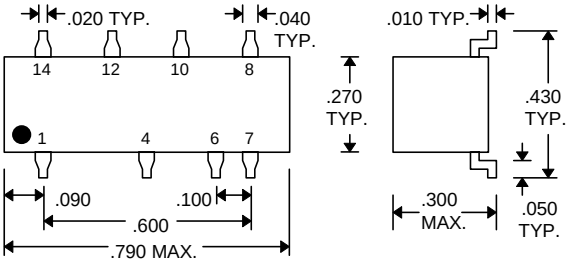

DDU66F-xxA2 (Commercial Gull-Wing)

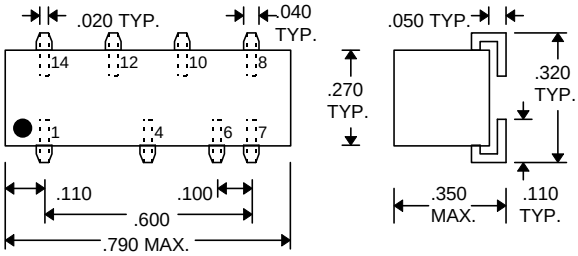

DDU66F-xxB2 (Commercial J-Lead)

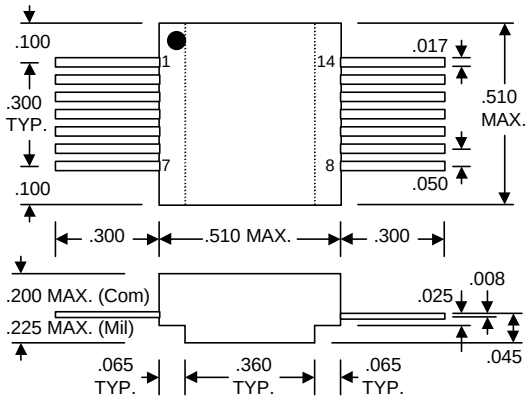

DDU66F-xxD1 (Commercial SMD)
DDU66F-xxMD1 (Military SMD)

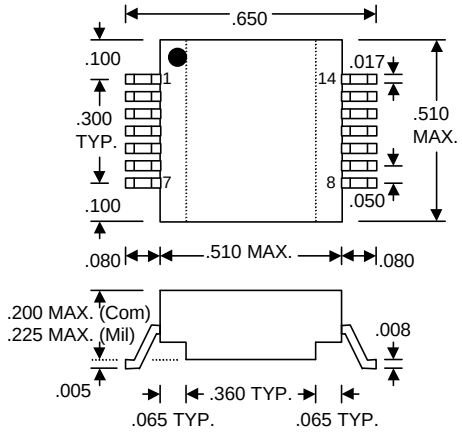

DDU66F-xxD4 (Commercial SMD)
DDU66F-xxMD4 (Military SMD)

DELAY LINE AUTOMATED TESTING

TEST CONDITIONS

INPUT:		**OUTPUT:**	
Ambient Temperature:	25°C ± 3°C	**Load:**	1 FAST-TTL Gate
Supply Voltage (Vcc):	5.0V ± 0.1V	**C_{load}:**	5pf ± 10%
Input Pulse:	High = 3.0V ± 0.1V Low = 0.0V ± 0.1V	**Threshold:**	1.5V (Rising & Falling)
Source Impedance:	50Ω Max.		
Rise/Fall Time:	3.0 ns Max. (measured between 0.6V and 2.4V)		
Pulse Width:	PW_{IN} = 1.5 x Total Delay		
Period:	PER_{IN} = 10 x Total Delay		

NOTE: The above conditions are for test only and do not in any way restrict the operation of the device.

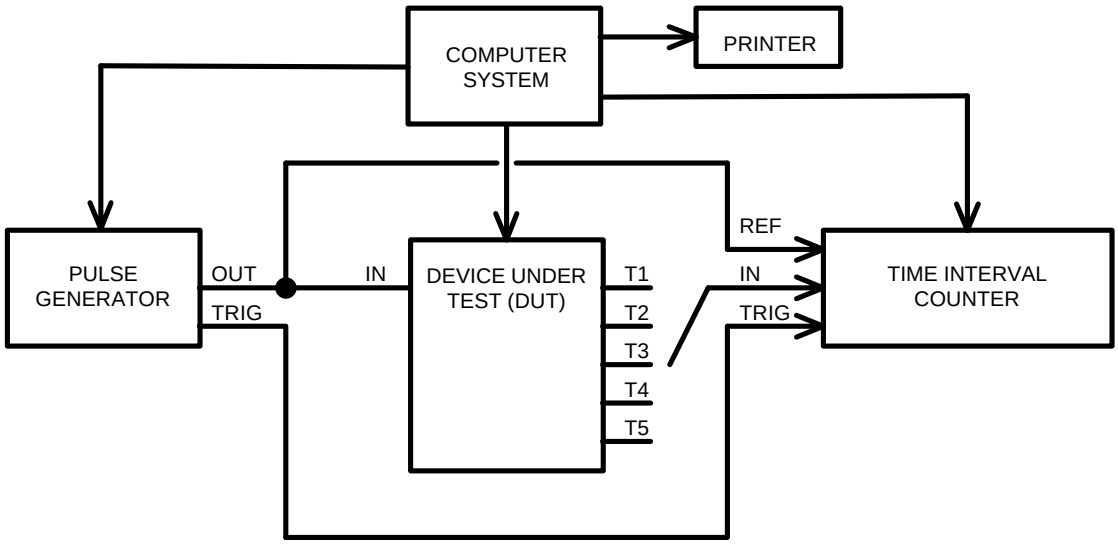

Test Setup

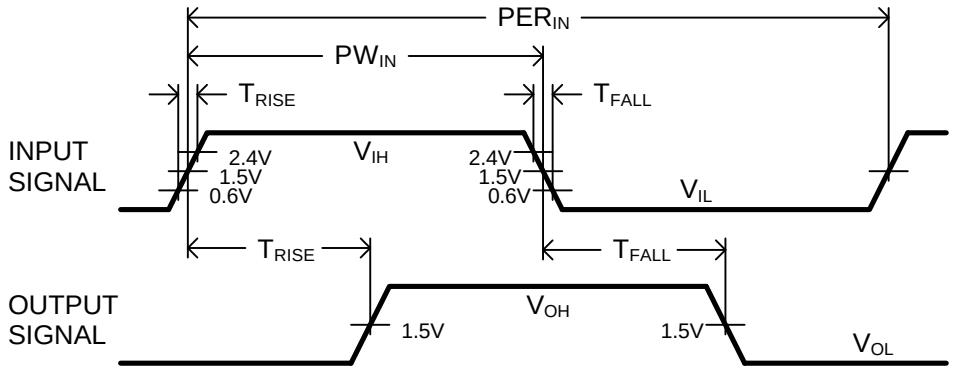

Timing Diagram For Testing