SBAS255C − JUNE 2004 − REVISED APRIL 2009

Quad Current Input, 20-Bit Analog-To-Digital Converter

FEATURES

- SINGLE-CHIP SOLUTION TO DIRECTLY MEASURE FOUR LOW-LEVEL CURRENTS
- HIGH PRECISION, TRUE INTEGRATING FUNCTION
- INTEGRAL LINEARITY: ±0.01% of Reading ±0.5ppm of FSR
- VERY LOW NOISE: 5.2ppm of FSR
- LOW POWER: 13.5mW/channel
- ADJUSTABLE DATA RATE: Up to 3.125kSPS
- PROGRAMMABLE FULL SCALE
- DAISY-CHAINABLE SERIAL INTERFACE

APPLICATIONS

- CT SCANNER DAS
- PHOTODIODE SENSORS
- INFRARED PYROMETERS
- LIQUID/GAS CHROMATOGRAPHY

Protected by US Patent #5841310

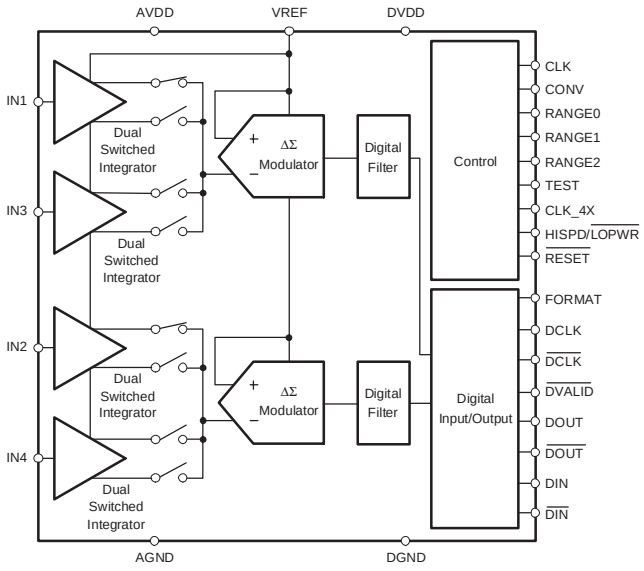

DESCRIPTION

The DDC114 is a 20-bit, quad channel, current-input analog-to-digital (A/D) converter. It combines both current-to-voltage and A/D conversion so that four low-level current output devices, such as photodiodes, can be directly connected to its inputs and digitized.

For each of the four inputs, the DDC114 provides a dual-switched integrator front-end. This design allows for continuous current integration: while one integrator is being digitized by the onboard A/D converter, the other is integrating the input current. Adjustable full-scale ranges from 12pC to 350pC and adjustable integration times from 50µs to 1s allow currents from fAs to µAs to be measured with outstanding precision. Low-level linearity is ±0.5ppm of the full-scale range and noise is 5.2ppm of the full-scale range.

Two modes of operation are provided. In Low-Power mode, total power dissipation is only 13.5mW per channel with a maximum data rate of 2.5kSPS. High-Speed mode supports data rates up to 3.125kSPS with a corresponding dissipation of 18mW per channel.

The DDC114 has a serial interface designed for daisy-chaining in multi-device systems. Simply connect the output of one device to the input of the next to create the chain. Common clocking feeds all the devices in the chain so that the digital overhead in a multi-DDC114 system is minimal.

The DDC114 is a single-supply device using a +5V analog supply and supporting a +2.7V to +5.25V digital supply. Operating over the industrial temperature range of −40°C to +85°C, the DDC114 is offered in a QFN-48 package.

Please be aware that an important notice concerning availability, standard warranty, and use in critical applications of Texas Instruments semiconductor products and disclaimers thereto appears at the end of this data sheet.

All trademarks are the property of their respective owners.

PRODUCTION DATA information is current as of publication date. Products conform to specifications per the terms of Texas Instruments standard warranty. Production processing does not necessarily include testing of all parameters.

Copyright © 2004−2009, Texas Instruments Incorporated

PACKAGE/ORDERING INFORMATION

For the most current package and ordering information, see the Package Option Addendum at the end of this document, or see the TI website at www.ti.com.

ABSOLUTE MAXIMUM RATINGS(1)

Analog Input Current	750µA
AVDD to DVDD	−0.3V to +6V
AVDD to AGND	−0.3V to +6V
DVDD to DGND	−0.3V to +6V
AGND to DGND	±0.2V
VREF Input to AGND	2.0V to AVDD + 0.3V
Analog Input to AGND	−0.3V to +0.7V
Digital Input Voltage to DGND	−0.3V to DVDD + 0.3V
Digital Output Voltage to DGND	−0.3V to AVDD + 0.3V
Operating Temperature	−40°C to +85°C
Storage Temperature	−60°C to +150°C
Junction Temperature (T_J)	+150°C

(1) Stresses above these ratings may cause permanent damage. Exposure to absolute maximum conditions for extended periods may degrade device reliability. These are stress ratings only, and functional operation of the device at these or any other conditions beyond those specified is not implied.



This integrated circuit can be damaged by ESD. Texas Instruments recommends that all integrated circuits be handled with appropriate precautions. Failure to observe proper handling and installation procedures can cause damage.

ESD damage can range from subtle performance degradation to complete device failure. Precision integrated circuits may be more susceptible to damage because very small parametric changes could cause the device not to meet its published specifications.

ELECTRICAL CHARACTERISTICS

At T_A = +25°C, AVDD = +5V, DVDD = 3V, VREF = +4.096V, Range 5 (250pC), and continuous mode operation, unless otherwise noted.
Low-Power Mode: T_{INT} = 400µs and CLK = 4MHz; High-Speed Mode: T_{INT} = 320µs and CLK = 4.8MHz.

PARAMETER	TEST CONDITIONS	Low-Power Mode			High-Speed Mode			UNITS
		MIN	TYP	MAX	MIN	TYP	MAX	
ANALOG INPUT RANGE								
Range 0		10.2	12	13.8	*(1)	*	*	pC
Range 1		47.5	50	52.5	*	*	*	pC
Range 2		95	100	105	*	*	*	pC
Range 3		142.5	150	157.5	*	*	*	pC
Range 4		190	200	210	*	*	*	pC
Range 5		237.5	250	262.5	*	*	*	pC
Range 6		285	300	315	*	*	*	pC
Range 7		332.5	350	367.5	*	*	*	pC
Negative Full-Scale Range		−0.4% of Positive Full-Scale Range				*		pC
Input Current(2)			750			*		µA
DYNAMIC CHARACTERISTICS								
Data Rate				2.5			3.125	kSPS
Integration Time, T_{INT}	Continuous Mode	400		1,000,000	320		*	µS
	Non-continuous Mode, Range 1 to 7	50			*			µS
System Clock Input (CLK)								
CLK_4X = 0				4			4.8	MHz
CLK_4X = 1				16			19.2	MHz
Data Clock (DCLK)				16			*	MHz
ACCURACY								
Noise, Low-Level Input(3)	C_{SENSOR}(4) = 50pF, Range 5 (250pC)		5.2	6.5		5.5	7	ppm of FSR(5), rms
Integral Linearity Error(6)		±0.01% Reading ± 0.5ppm FSR, typ				*		
		±0.025% Reading ± 1.0ppm FSR, max				*		
Resolution	FORMAT = 1	20			*			Bits
	FORMAT = 0	16			*			Bits
Input Bias Current			0.1	10		*	*	pA
Range Error Match(7)	All Ranges		0.1	0.5		*	*	% of FSR
Range Sensitivity to VREF	V_{REF} = 4.096 ± 0.1V		1:1			*		
Offset Error			±400	±1000		*	*	ppm of FSR
Offset Error Match(7)			±100			*		ppm of FSR
DC Bias Voltage(9)	Low-Level Input (< 1% FSR)		±0.05	±2		*	*	mV
Power-Supply Rejection Ratio	at dc		±25	±200		*	*	ppm of FSR/V
Internal Test Signal			11			*		pC
Internal Test Accuracy			±10			*		%
PERFORMANCE OVER TEMPERATURE								
Offset Drift			±0.5	±3(8)		*	*	ppm of FSR/°C
Offset Drift Stability			±0.2	±1(8)		*	*	ppm of FSR/ minute
DC Bias Voltage Drift(9)			3			*		µV/°C
Input Bias Current Drift	T_A = +25°C to +45°C		0.01	1(8)		*	*	pA/°C
Range Drift(10)			25			*		ppm/°C
REFERENCE								
Voltage		4.000	4.096	4.200	*	*	*	V
Input Current(11)	Average Value		75			95		µA

(1) * indicates that specification is the same as Low-Power Mode.
(2) Exceeding maximum input current specification may damage device.
(3) Input is less than 1% of full scale.
(4) C_{SENSOR} is the capacitance seen at the DDC114 inputs from wiring, photodiode, etc.
(5) FSR is Full-Scale Range.
(6) A best-fit line is used in measuring nonlinearity.
(7) Matching between side A and side B of the same input.
(8) Ensured by design, not production tested.
(9) Voltage produced by the DDC114 at its input which is applied to the sensor.
(10) Range drift does not include external reference drift.
(11) Input reference current decreases with increasing T_{INT} (see the *Voltage Reference* section, page 11).

ELECTRICAL CHARACTERISTICS (continued)

At T_A = +25°C, AVDD = +5V, DVDD = 3V, VREF = +4.096V, Range 5 (250pC), and continuous mode operation, unless otherwise noted.
Low-Power Mode: T_{INT} = 400µs and CLK = 4MHz; High-Speed Mode: T_{INT} = 320µs and CLK = 4.8MHz.

PARAMETER	TEST CONDITIONS	Low-Power Mode			High-Speed Mode			UNITS
		MIN	TYP	MAX	MIN	TYP	MAX	
DIGITAL INPUT/OUTPUT								
Logic Levels								
V_{IH}		0.8DVDD		DVDD + 0.1	*		*	V
V_{IL}		− 0.1		0.2DVDD	*		*	V
V_{OH}	I_{OH} = −500µA	DVDD − 0.4						V
V_{OL}	I_{OL} = 500µA			0.4			*	V
Input Current (I_{IN})	0 < V_{IN} < DVDD			±10			*	µA
Data Format[12]			Straight Binary			*		
POWER-SUPPLY REQUIREMENTS								
Analog Power-Supply Voltage (AVDD)		4.75		5.25	*		*	V
Digital Power-Supply Voltage (DVDD)		2.7		5.25	*		*	V
Supply Current								
Total Analog Current			10.5			14.0		mA
Total Digital Current	DVDD = +3V		0.5			0.67		mA
Total Power Dissipation	DVDD = +3V		54	75		72	100	mW
Total Power Dissipation per Channel	DVDD = +3V		13.5	18.75		18	25	mW

(12) Data format is Straight Binary with a small offset. The number of bits in the output word is controlled by the FORMAT pin (see text).

PIN CONFIGURATIONS

Top View **QFN**

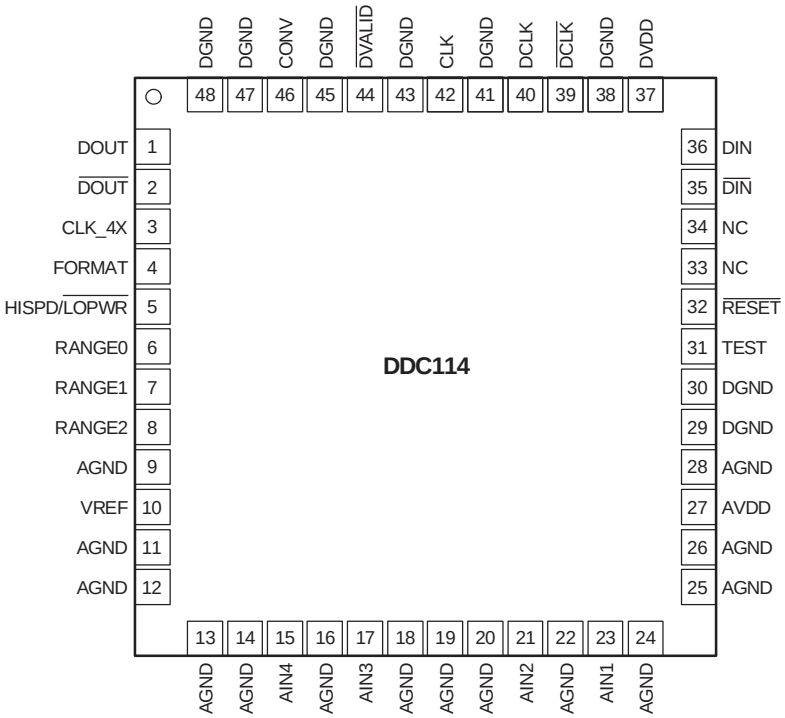

PIN DESCRIPTIONS

PIN	NUMBER	FUNCTION	DESCRIPTION
DOUT	1	Digital Output	Serial Data Output
$\overline{\text{DOUT}}$	2	Digital Output	Serial Data Output: Complementary Signal
CLK_4X	3	Digital Input	Master Clock Divider Control: 0 = divide by 1, 1 = divide by 4
FORMAT	4	Digital Input	Digital Output Word Format: 0 = 16 Bits, 1 = 20 Bits
HISPD/$\overline{\text{LOPWR}}$	5	Digital Input	Mode Control: 0 = Low-Power, 1 = High-Speed
RANGE0	6	Digital Input	Range Control 0 (least significant bit)
RANGE1	7	Digital Input	Range Control 1
RANGE2	8	Digital Input	Range Control 2 (most significant bit)
AGND	9, 11-14, 16, 18-20, 22, 24-26, 28	Analog	Analog Ground
VREF	10	Analog Input	External Voltage Reference Input, 4.096V Nominal
AIN4	15	Analog Input	Analog Input 4
AIN3	17	Analog Input	Analog Input 3
AIN2	21	Analog Input	Analog Input 2
AIN1	23	Analog Input	Analog Input 1
AVDD	27	Analog	Analog Power Supply, 5V Nominal
DGND	29, 30, 38, 41, 43, 45, 47, 48	Digital	Digital Ground
TEST	31	Digital Input	Test Mode Control
$\overline{\text{RESET}}$	32	Digital Input	Resets the Digital Circuitry, Active Low
NC	33, 34	—	No Connection
$\overline{\text{DIN}}$	35	Digital Input	Serial Data Input: Complementary Signal (optional, see text on page 13)
DIN	36	Digital Input	Serial Data Input
DVDD	37	Digital	Digital Power Supply, 3V Nominal
$\overline{\text{DCLK}}$	39	Digital Input	Serial Data Clock Input: Complementary Signal (optional, see text on page 13)
DCLK	40	Digital Input	Serial Data Clock Input
CLK	42	Digital Input	Master Clock Input
$\overline{\text{DVALID}}$	44	Digital Output	Data Valid Output, Active Low
CONV	46	Digital Input	Conversion Control Input: 0 = Integrate on Side B, 1 = Integrate on Side A

TYPICAL CHARACTERISTICS

At T_A = +25°C, characterization done with Range 5 (250pC), AVDD = +5V, DVDD = 3V, V_{REF} = +4.096V, Low Power Mode: T_{INT} = 400µs and CLK = 4MHz, unless otherwise noted.

NOISE vs C_{SENSOR}

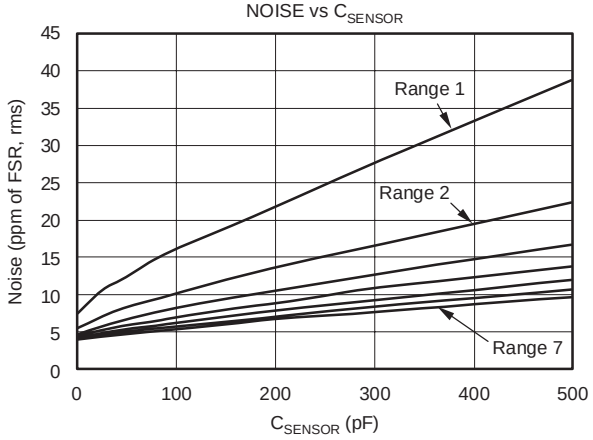

NOISE vs C_{SENSOR}

C_{SENSOR} (pF)	Noise (ppm of FSR, rms)							
	Range 0	Range 1	Range 2	Range 3	Range 4	Range 5	Range 6	Range 7
0	23.6	7.3	5.2	4.4	4.2	4.0	3.8	3.7
24	30.8	10.4	6.7	5.5	4.9	4.5	4.3	4.1
50	36.3	12.3	8.2	6.5	5.6	5.1	4.8	4.4
75	41.3	14.4	8.9	7.2	6.0	5.4	5.1	4.7
100	46.1	16.0	10.0	8.0	6.7	5.9	5.4	5.0
150	57.0	18.8	11.9	9.2	7.8	6.8	6.1	5.7
200	68.1	21.7	13.5	10.2	8.6	7.6	6.8	6.4
300	89.3	27.7	16.3	12.5	10.6	9.0	8.1	7.4
500	134.0	38.9	22.4	16.6	13.5	11.7	10.4	9.5

NOISE vs T_{INT}

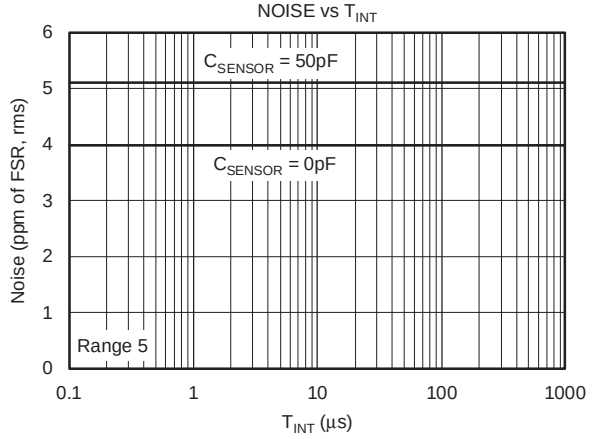

NOISE vs INPUT LEVEL

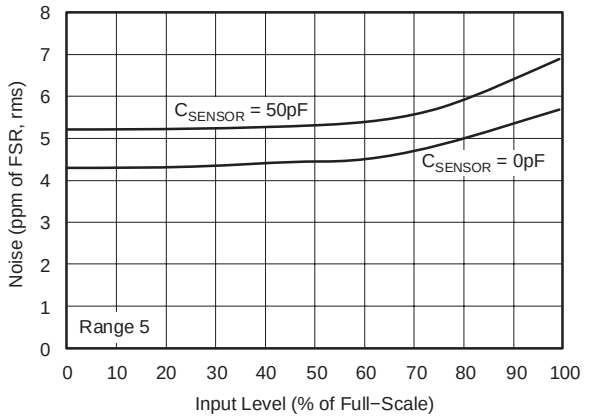

NOISE vs TEMPERATURE

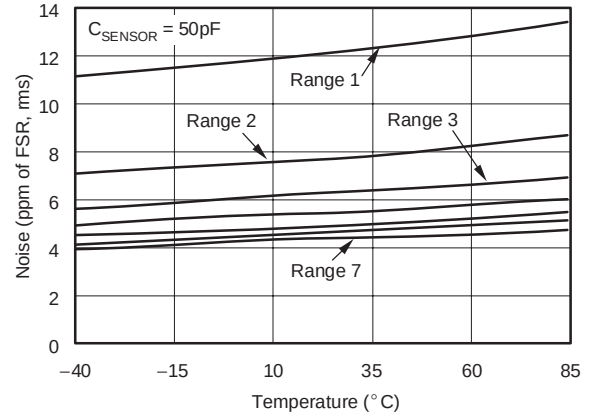

RANGE DRIFT vs TEMPERATURE

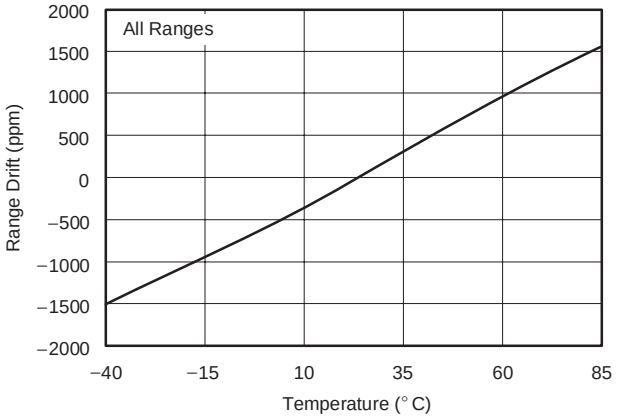

TYPICAL CHARACTERISTICS (continued)

At T_A = +25°C, characterization done with Range 5 (250pC), AVDD = +5V, DVDD = 3V, V_{REF} = +4.096V, Low Power Mode: T_{INT} = 400µs and CLK = 4MHz, unless otherwise noted.

I_B vs TEMPERATURE

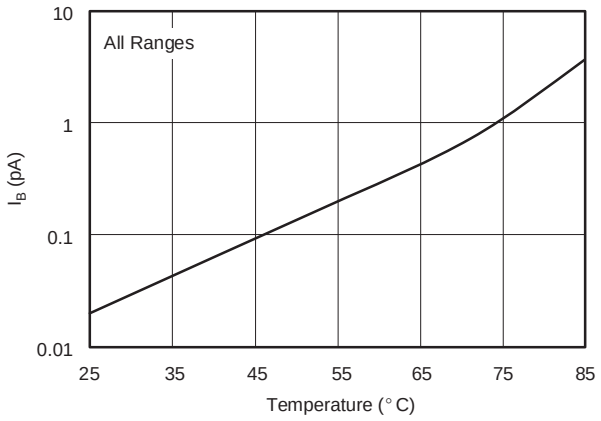

OFFSET DRIFT vs TEMPERATURE

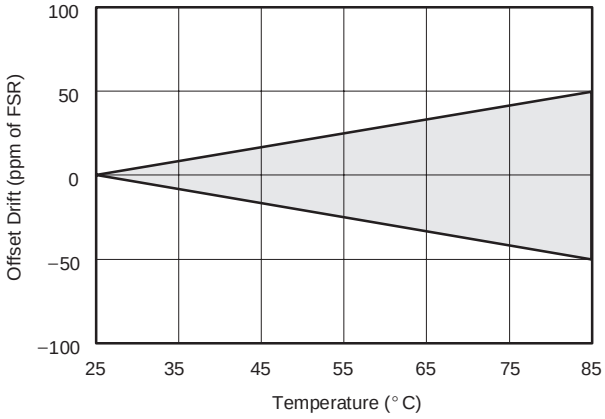

ANALOG SUPPLY CURRENT vs TEMPERATURE

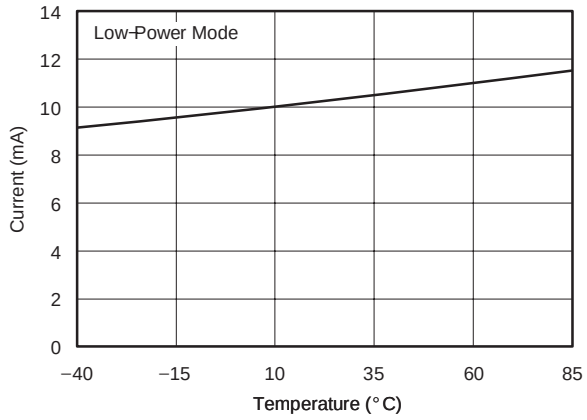

DIGITAL SUPPLY CURRENT vs TEMPERATURE

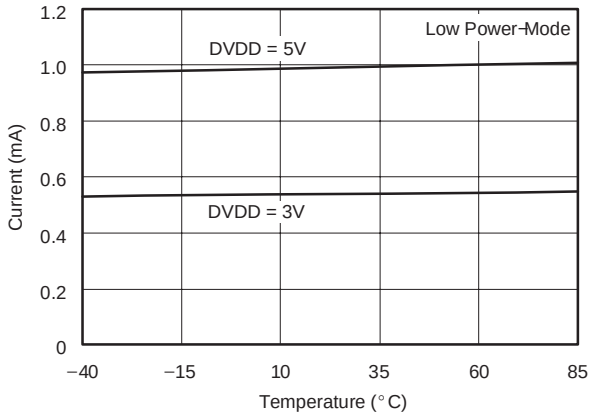

POWER CONSUMPTION HISTOGRAM

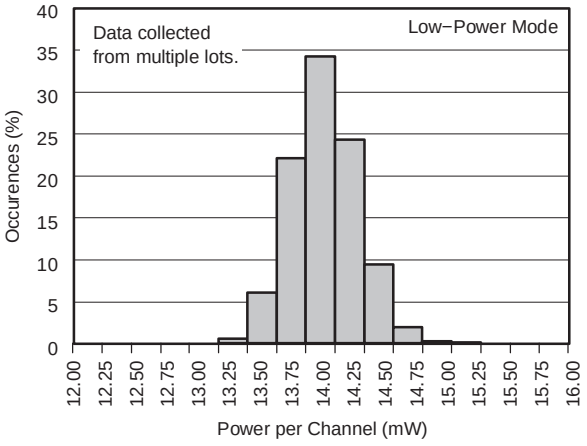

OFFSET DRIFT OVER TIME HISTOGRAM

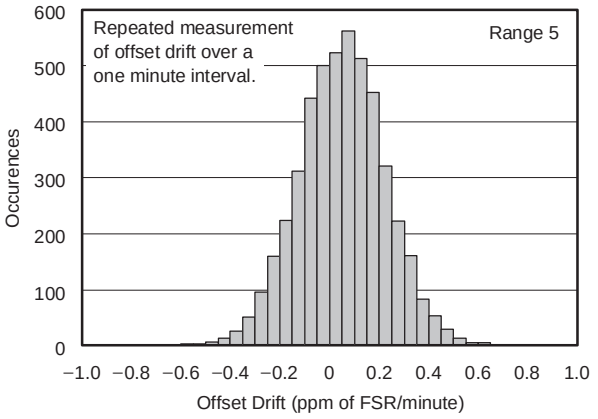

THEORY OF OPERATION

The block diagram of the DDC114 is shown in Figure 1. The device contains four identical input channels that perform the function of current-to-voltage integration followed by a multiplexed A/D conversion. Each input has two integrators so that the current-to-voltage integration can be continuous in time. The output of the eight integrators are switched to two delta-sigma (ΔΣ) converters via two four-input multiplexers. With the DDC114 in the continuous integration mode, the output of the integrators from one side of both of the inputs will be digitized while the other two integrators are in the integration mode, as illustrated in the timing diagram in Figure 2. This integration and A/D conversion process is controlled by the system clock, CLK. The results from side A and side B of each signal input are stored in a serial output shift register. The $\overline{\text{DVALID}}$ output goes low when the shift register contains valid data.

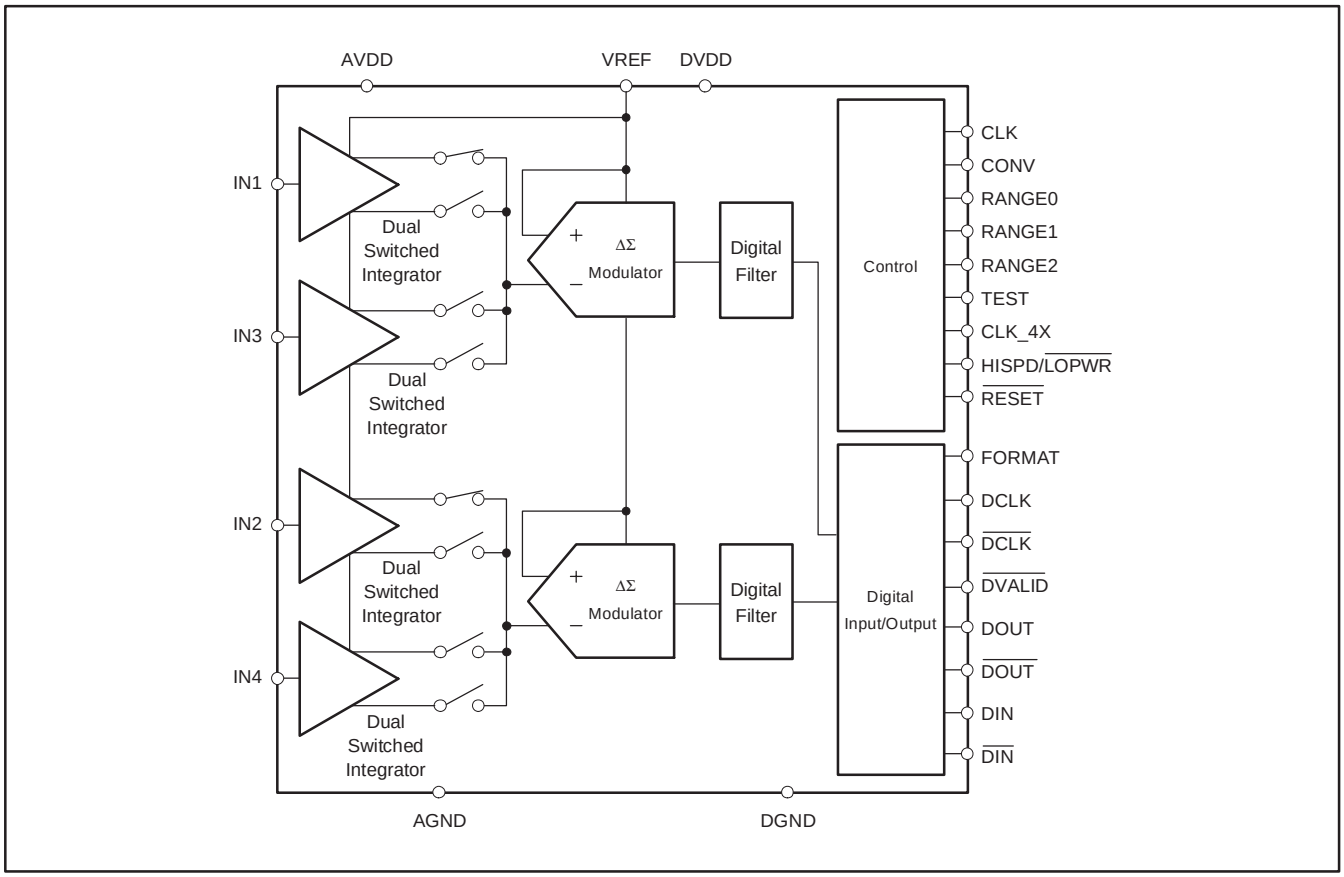

Figure 1. DDC114 Block Diagram

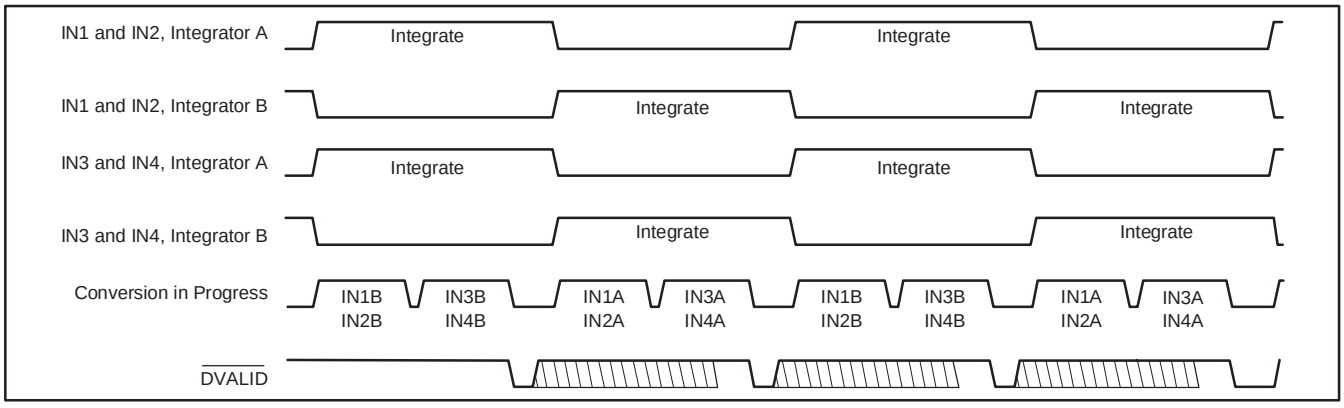

Figure 2. Basic Integration and Conversion Timing for the DDC114 (continuous mode)

The digital interface of the DDC114 provides the digital results via a synchronous serial interface consisting of differential data clocks (DCLK and $\overline{\text{DCLK}}$), a valid data pin ($\overline{\text{DVALID}}$), differential serial data output pins (DOUT and $\overline{\text{DOUT}}$), and differential serial data input pins (DIN and $\overline{\text{DIN}}$). The DDC114 contains only two A/D converters, so the conversion process is interleaved (see Figure 2). The integration and conversion process is fundamentally independent of the data retrieval process. Consequently, the CLK frequency and DCLK frequencies need not be the same. DIN and $\overline{\text{DIN}}$ are only used when multiple converters are cascaded, and otherwise should both be tied to DGND.

DEVICE OPERATION

Basic Integration Cycle

The topology of the front end of the DDC114 is an analog integrator, as shown in Figure 3. In this diagram, only Input IN1 is shown. This representation of the input stage consists of an operational amplifier, a selectable feedback capacitor network (C_F), and several switches that implement the integration cycle. The timing relationships of all of the switches shown in Figure 3 are illustrated in Figure 4. Figure 4 is used to conceptualize the operation of the integrator input stage of the DDC114 and should not be used as an exact timing tool for design. See Figure 5 for the block diagrams of the reset, integrate, wait and convert states of the integrator section of the DDC114. This internal switching network is controlled externally with the convert pin (CONV), range selection pins (RANGE0−RANGE2), and the system clock (CLK). For the best noise performance, CONV must be synchronized with the rising edge of CLK. It is recommended that CONV toggle within ±10ns of the rising edge of CLK.

The noninverting inputs of the integrators are connected to ground. Consequently, the DDC114 analog ground should be as clean as possible. The range switches, along with the internal and external capacitors (C_F), are shown in parallel between the inverting input and output of the operational amplifier. At the beginning of a conversion, the switches $S_{A/D}$, S_{INTA}, S_{INTB}, S_{REF1}, S_{REF2}, and S_{RESET} are set (see Figure 4).

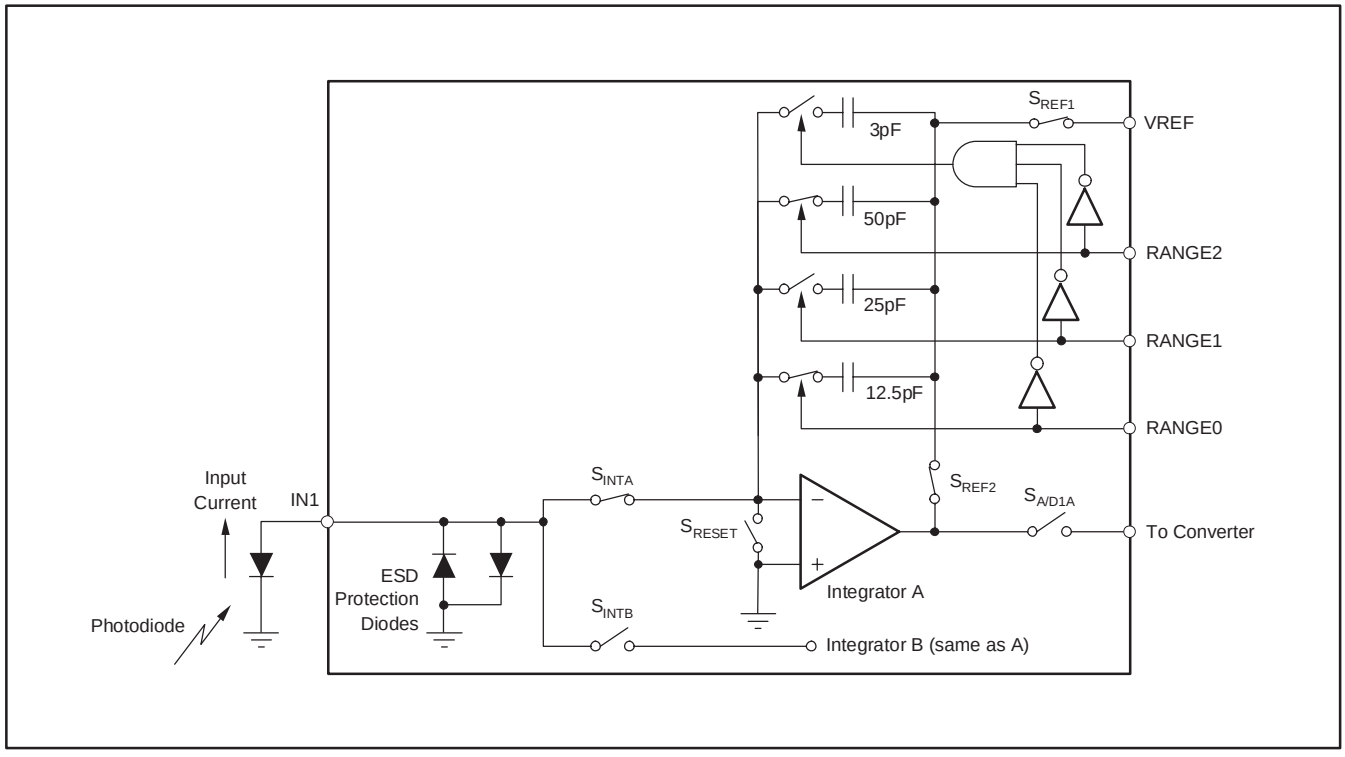

Figure 3. Basic Integration Configuration for Input 1, Shown with a 250pC (C_F = 62.5pF) Input Range

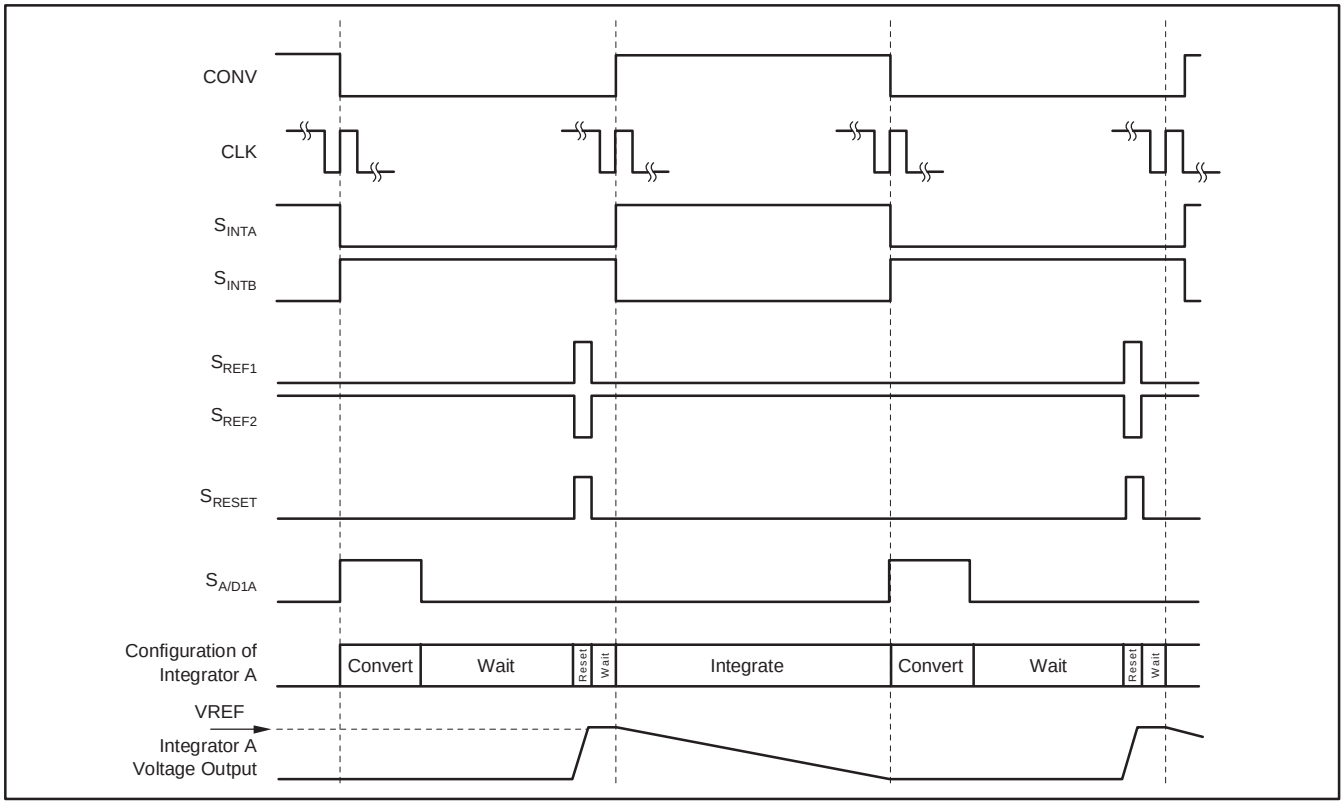

Figure 4. Basic Integration Timing Diagram (as shown in Figure 3)

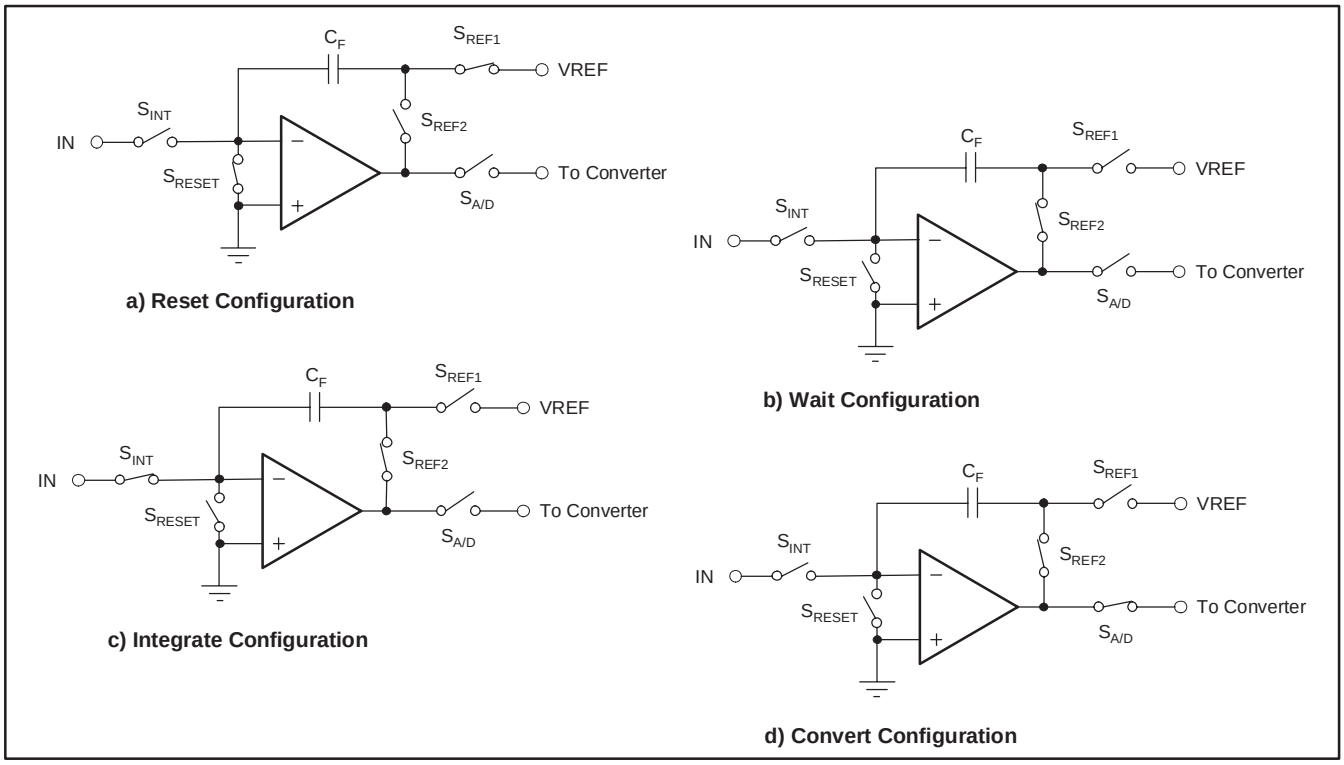

Figure 5. Diagrams for the Four Configurations of the Front End Integrators of the DDC114

At the completion of an A/D conversion, the charge on the integration capacitor (C_F) is reset with S_{REF1} and S_{RESET} (see Figure 4 and Figure 5a). In this manner, the selected capacitor is charged to the reference voltage, VREF. Once the integration capacitor is charged, S_{REF1} and S_{RESET} are switched so that VREF is no longer connected to the amplifier circuit while it waits to begin integrating (see Figure 5b). With the rising edge of CONV, S_{INTA} closes, which begins the integration of side A. This process puts the integrator stage into its integrate mode (see Figure 5c).

Charge from the input signal is collected on the integration capacitor, causing the voltage output of the amplifier to decrease. The falling edge of CONV stops the integration by switching the input signal from side A to side B (S_{INTA} and S_{INTB}). Prior to the falling edge of CONV, the signal on side B was converted by the A/D converter and reset during the time that side A was integrating. With the falling edge of CONV, side B starts integrating the input signal. Now the output voltage of the side A operational amplifier is presented to the input of the ΔΣ A/D converter (see Figure 5d).

Integration Capacitors

There are eight different capacitors available on-chip for both sides of every channel in the DDC114. These internal capacitors are trimmed in production to achieve the specified performance for range error of the DDC114. The range control pins (RANGE0–RANGE2) change the capacitor value for all four integrators. Consequently, all inputs and both sides of each input will always have the same full-scale range. Table 1 shows the capacitor value selected for each range selection.

Table 1. Range Selection of the DDC114

RANGE2	RANGE1	RANGE0	C_F (pF, typ)	INPUT RANGE (pC, typ)
0	0	0	3	−0.048 to 12
0	0	1	12.5	–0.2 to 50
0	1	0	25	–0.4 to 100
0	1	1	37.5	–0.6 to 150
1	0	0	50	–0.8 to 200
1	0	1	62.5	–0.1 to 250
1	1	0	75	–1.2 to 300
1	1	1	87.5	–1.4 to 350

Voltage Reference

The external voltage reference is used to reset the integration capacitors before an integration cycle begins. It is also used by the ΔΣ converter while the converter is measuring the voltage stored on the integrators after an integration cycle ends. During this sampling, the external reference must supply the charge needed by the ΔΣ converter. For an integration time of 400μs, this charge translates to an average VREF current of approximately 75μA. The amount of charge needed by the ΔΣ converter is independent of the integration time; therefore, increasing the integration time lowers the average current. For example, an integration time of 800μs lowers the average VREF current to 37.5μA.

It is critical that VREF be stable during the different modes of operation (see Figure 5). The ΔΣ converter measures the voltage on the integrator with respect to VREF. Since the integrator capacitors are initially reset to VREF, any drop in VREF from the time the capacitors are reset to the time when the converter measures the integrator output will introduce an offset. It is also important that VREF be stable over longer periods of time because changes in VREF correspond directly to changes in the full-scale range. Finally, VREF should introduce as little additional noise as possible.

For these reasons, it is strongly recommended that the external reference source be buffered with an operational amplifier, as shown in Figure 6. In this circuit, the voltage reference is generated by a 4.096V reference. A low-pass filter to reduce noise connects the reference to an operational amplifier configured as a buffer. This amplifier should have low noise and input/output common-mode ranges that support VREF. Following the buffer are capacitors placed close to the DDC114 VREF pin. Even though the circuit in Figure 6 might appear to be unstable because of the large output capacitors, it works well for most operational amplifiers. It is NOT recommended that series resistance be placed in the output lead to improve stability since this can cause a drop in VREF, producing large offsets.

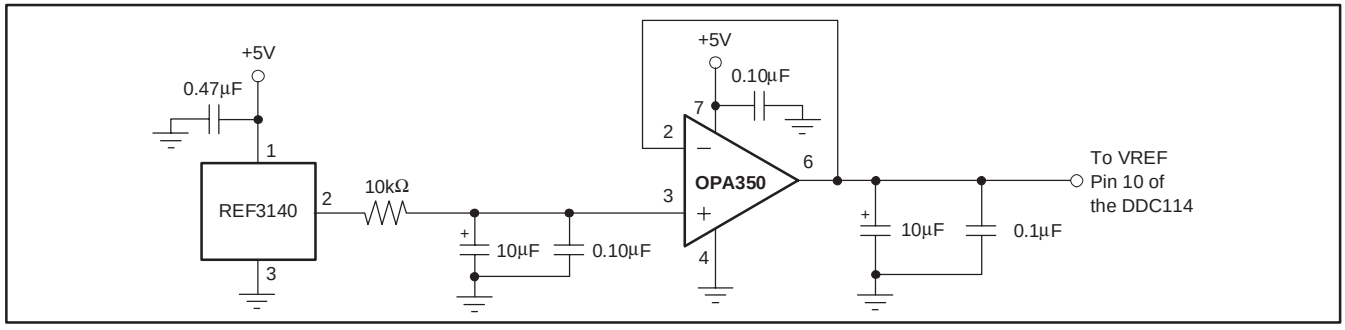

Figure 6. Recommended External Voltage Reference Circuit for Best Low-Noise Operation with the DDC114

DDC114 Frequency Response

The frequency response of the DDC114 is set by the front end integrators and is that of a traditional continuous time integrator, as shown in Figure 7. By adjusting T_{INT}, the user can change the 3dB bandwidth and the location of the notches in the response. The frequency response of the ΔΣ converter that follows the front end integrator is of no consequence because the converter samples a held signal from the integrators. That is, the input to the ΔΣ converter is always a DC signal. Since the output of the front end integrators are sampled, aliasing can occur. Whenever the frequency of the input signal exceeds one-half of the sampling rate, the signal will fold back down to lower frequencies.

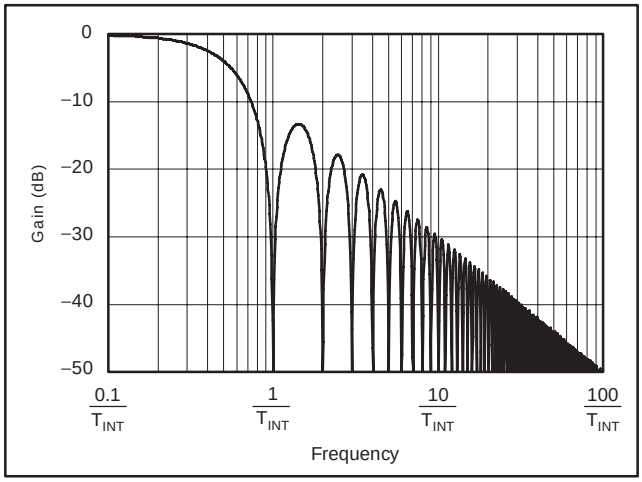

Figure 7. Frequency Response of the DDC114

Test Mode

When Test Mode is used, the inputs (IN1, IN2, IN3, and IN4) are disconnected from the DDC114 integrators to enable the user to measure a zero input signal regardless of the current supplied to the inputs. In addition, packets of charge can be transferred to the integrators in 11pC intervals to measure non-zero values. The test mode works with both the continuous and non-continuous modes. The timing diagram for the test mode is shown in Figure 8 with the timing specifications given in Table 2.

To enter Test Mode, hold TEST high while CONV transitions. If TEST is held high during the entire integration period, the integrators measure a zero value. This mode can be used to help debug a design or perform diagnostic tests. To apply packets of charge during Test Mode, simply strobe TEST low then high before the next CONV transition. Each rising edge of TEST causes approximately 11pC of charge to be transferred to the integrators. This charge transfer is independent of the integration time. Data retrieval during Test Mode is identical to normal operation. To exit Test Mode, take TEST low and allow several cycles after exiting before using the data.

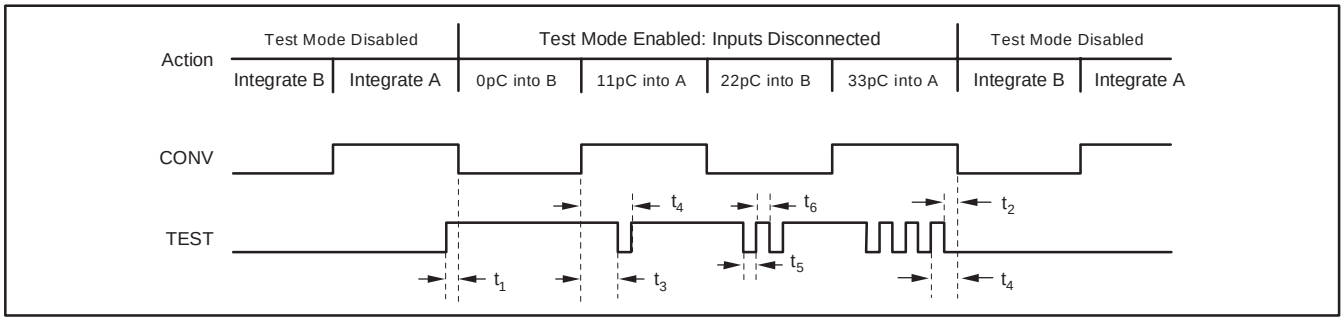

Figure 8. Timing Diagram of the Test Mode of the DDC114

Table 2. Timing for the DDC114 in the Test Mode

SYMBOL	DESCRIPTION	MIN	TYP	MAX	UNITS
t_1	Setup Time for Test Mode Enable	100			ns
t_2	Setup Time for Test Mode Disable	100			ns
t_3	Hold Time for Test Mode Enable	100			ns
t_4	From Rising Edge of TEST to the Edge of CONV while Test Mode Enabled	1			µs
t_5	Falling Edge to Rising Edge of TEST	1			µs
t_6	Rising Edge to Falling Edge of TEST	1			µs

DIGITAL INTERFACE

The digital interface of the DDC114 provides the digital results via a synchronous serial interface consisting of differential data clocks (DCLK and $\overline{\text{DCLK}}$), a valid data pin ($\overline{\text{DVALID}}$), differential serial data output pins (DOUT and $\overline{\text{DOUT}}$), and differential serial data input pins (DIN and $\overline{\text{DIN}}$). The DDC114 contains only two A/D converters, so the conversion process is interleaved (see Figure 2, page 8). The integration and conversion processes are independent of the data retrieval process. Consequently, the CLK frequency and DCLK frequencies need not be the same. DIN and $\overline{\text{DIN}}$ are used when multiple converters are cascaded. Cascading or *daisy-chaining* greatly simplifies the interconnection and routing of the digital outputs in cases where a large number of converters are needed. Refer to the *Cascading Multiple Converters* section of this data sheet for more detail.

Complementary Signals ($\overline{\text{DCLK}}$, $\overline{\text{DIN}}$, and $\overline{\text{DOUT}}$)

The DDC114 provides optional complementary inputs ($\overline{\text{DCLK}}$, $\overline{\text{DIN}}$) to help reduce digital coupling to the analog inputs. If using these inputs, connect a complementary signal to each. If these inputs are not connected on the DDC114, they should be tied to DGND. $\overline{\text{DOUT}}$ is a complementary output designed to drive $\overline{\text{DIN}}$. If not using $\overline{\text{DOUT}}$, leave it floating.

System and Data Clocks (CLK and CONV)

The system clock is supplied to CLK and the data clock is supplied to DCLK. Make sure the clock signals are clean—avoid overshoot or ringing. For best performance, generate both clocks from the same clock source. DCLK should be disabled by taking it low after the data has been shifted out or while CONV is transitioning.

When using multiple DDC114s, pay close attention to the DCLK distribution on the printed circuit board (PCB). In particular, make sure to minimize skew in the DCLK signal as this can lead to timing violations in the serial interface specifications. See the *Cascading Multiple Converters* section for more details.

System Clock Divider (CLK_4X)

The CLK_4X input enables an internal divider on the system clock as shown in Table 3. When CLK_4X = 1, the system clock is divided by four. This allows a 4X faster system clock, which in turn provides a finer quantization of the integration time as the CONV signal needs to be synchronized with the system clock for the best performance.

Table 3. CLK_4X Pin Operation

CLK_4X PIN	CLK DIVIDER VALUE	CLK FREQUENCY	INTERNAL CLOCK FREQUENCY
0	1	4MHz	4MHz
1	4	16MHz	4MHz

High-Speed and Low-Power Modes (HISPD/$\overline{\text{LOPWR}}$)

The HISPD/$\overline{\text{LOPWR}}$ input controls the power dissipation and in turn the maximum allowable CLK frequency and data rate, as shown in Table 4. With HISPD/$\overline{\text{LOPWR}}$ = 0, the Low-Power Mode is selected with a typical 13.5mW/channel and a maximum data rate of 2.5kSPS. Setting HISPD/$\overline{\text{LOPWR}}$ = 1 selects the High-Speed Mode, which supports a maximum data rate of 3.125kSPS with a corresponding typical power of 18.0mW/channel.

Table 4. HISPD/$\overline{\text{LOPWR}}$ Pin Operation

HISPD/$\overline{\text{LOPWR}}$	MODE	TYPICAL POWER/CHANNEL	MAXIMUM CLK FREQUENCY (CLK_4X = 0)	MAXIMUM DATA RATE
0	Low Power	13.5mW/ch	4.0MHz	2.5kSPS
1	High Speed	18.0mW/ch	4.8MHz	3.125kSPS

Data Valid ($\overline{\text{DVALID}}$)

The $\overline{\text{DVALID}}$ signal indicates that data is ready. Data retrieval may begin after $\overline{\text{DVALID}}$ goes low. This signal is generated using an internal clock divided down from the system clock CLK. The phase relationship between this internal clock and CLK is set when power is first applied, and is random. Since the user must synchronize CONV with CLK, the $\overline{\text{DVALID}}$ signal will have a random phase relationship with CONV. This uncertainty is $\pm 1/f_{CLK}$. Polling $\overline{\text{DVALID}}$ eliminates any concern about this relationship. If data read back is timed from CONV, wait the maximum value of t_7 or t_8 to insure data is valid.

Reset ($\overline{\text{RESET}}$)

The DDC114 is reset asynchronously by taking the $\overline{\text{RESET}}$ input low, as shown in Figure 9. Make sure the reset pulse is at least 50µs wide. After resetting the DDC114, wait at least four conversions before using the data. It is very important to make sure the $\overline{\text{RESET}}$ is glitch free to avoid unintended resets. The $\overline{\text{RESET}}$ pin is used during power-up; see the *Power-Up Sequence* section for more details.

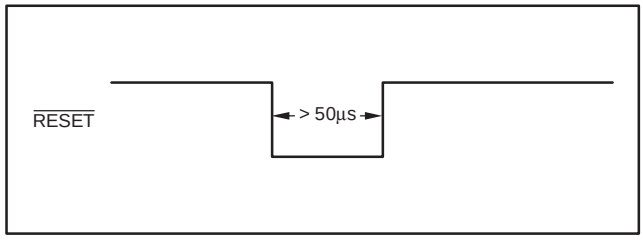

Figure 9. Reset Timing

Convert (CONV)

CONV controls the integration time (T_{INT}). For optimum analog performance, make sure CONV is synchronized to CLK.

This recommendation implies that while SPEED is low, T_{INT} needs to be adjusted in steps of 250ns if CLK_4X is low and CLK = 4MHz. If CLK_4X is high and CLK = 16MHz, this allows T_{INT} to be adjusted in steps of 62.5ns.

Conversion Rate

The conversion rate of the DDC114 is set by a combination of the integration time (determined by the user) and the speed of the A/D conversion process. The A/D conversion time is primarily a function of the system clock (CLK) speed. One A/D conversion cycle encompasses the conversion of two signals (one side of each dual integrator feeding the modulator) and the reset time for each of the integrators involved in the two conversions. In most situations, the A/D conversion time is shorter than the integration time. If this condition exists, the DDC114 will operate in continuous mode. When the DDC114 is in continuous mode, the sensor output is continuously integrated by one of the two sides of each input.

In the event that the A/D conversion takes longer than the integration time, the DDC114 will switch into a non-continuous mode. In non-continuous mode, the A/D converter is not able to keep pace with the speed of the integration process. Consequently, the integration process is periodically halted until the digitizing process catches up. These two basic modes of operation for the DDC114—continuous and non-continuous modes—are described below.

Continuous and Non-Continuous Operational Modes

Figure 10 shows the state diagram of the DDC114. In all, there are eight states. Table 5 provides a brief explanation of each state.

Table 5. State Descriptions

STATE	MODE	DESCRIPTION
1	Ncont	Complete m/r/az of side A, then side B (if previous state is state 4). Initial power-up state when CONV is initially held HIGH.
2	Ncont	Prepare side A for integration.
3	Cont	Integrate on side A.
4	Cont	Integrate on side B; m/r/az on side A.
5	Cont	Integrate on side A; m/r/az on side B.
6	Cont	Integrate on side B.
7	Ncont	Prepare side B for integration.
8	Ncont	Complete m/r/az of side B, then side A (if previous state is state 5). Initial power-up state when CONV is initially held LOW.

Four signals are used to control progression around the state diagram: CONV, mbsy, and their complements. The state machine uses the level as opposed to the edges of CONV to control the progression. mbsy is an internally-generated signal not available to the user. It is active whenever a measurement/reset/auto-zero (m/r/az) cycle is in progress.

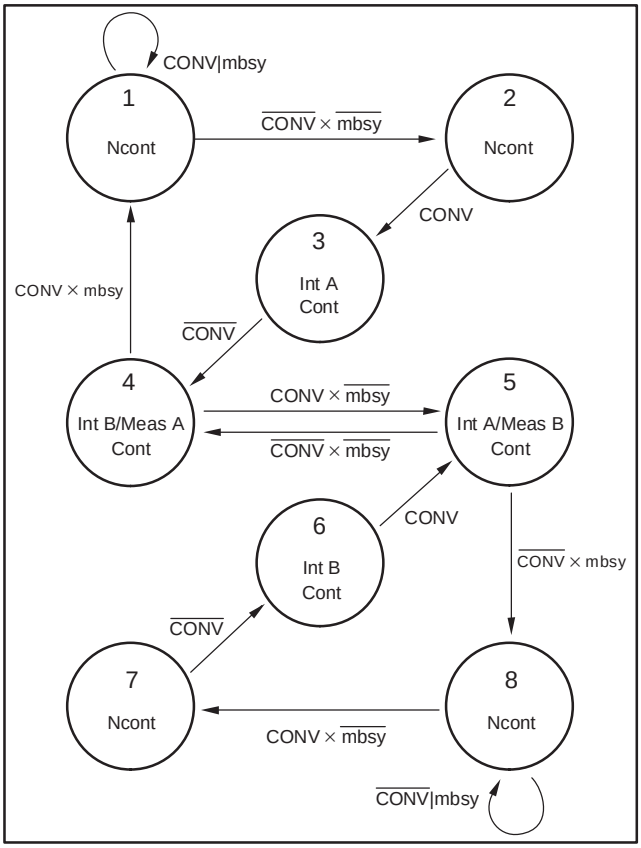

Figure 10. Integrate/Measure State Diagram

During cont mode, mbsy is not active when CONV toggles. The non-integrating side is always ready to begin integrating when the other side finishes its integration. Consequently, monitoring the current status of CONV is all that is needed to know the current state. Cont mode operation corresponds to states 3-6. Two of the states, 3 and 6, only perform an integration (no m/r/az cycle).

mbsy becomes important when operating in the ncont mode, states 1, 2, 7, and 8. Whenever CONV is toggled while mbsy is active, the DDC114 will enter or remain in either ncont state 1 (or 8). After mbsy goes inactive, state 2 (or 7) is entered. This state prepares the appropriate side for integration. In ncont states, the inputs to the DDC114 are grounded.

One interesting observation from the state diagram is that the integrations always alternate between sides A and B. This relationship holds for any CONV pattern and is independent of the mode. States 2 and 7 insure this relationship during ncont mode.

When power is first applied to the DDC114, the beginning state is either 1 or 8, depending on the initial level of CONV. For CONV held high at power-up, the beginning state is 1. Conversely, for CONV held low at power-up, the beginning state is 8. In general, there is a symmetry in the state diagram between states 1-8, 2-7, 3-6, and 4-5. Inverting CONV results in the states progressing through their symmetrical match.

TIMING EXAMPLES

Cont Mode

A few timing diagrams help illustrate the operation of the state machine. These diagrams are shown in Figure 11 through Figure 19. Table 6 gives generalized timing specifications in units of CLK periods for CLK_4X = 0. If CLK_4X = 1, these values increase by a factor of four because of the internal clock divider. Values (in µs) for Table 6 can be easily found for a given CLK. For example, if CLK = 4MHz, then a CLK period = 0.25µs. t_6 in Table 6 would then be 367.50 ± 0.125µs.

Table 6. Timing Specifications Generalized in CLK Periods

SYMBOL	DESCRIPTION	VALUE (CLK periods with CLK_4X = 0)
t_6	Cont mode m/r/az cycle	1470 ± 0.5
t_7	Cont mode data ready	1380 ± 0.5
t_8	1st ncont mode data ready	1379 ± 1
t_9	2nd ncont mode data ready	1450
t_{10}	Ncont mode m/r/az cycle	2901 ± 1

Figure 11 shows a few integration cycles beginning with initial power-up for a cont mode example. The top signal is CONV and is supplied by the user. The next line indicates the current state in the state diagram. The following two traces show when integrations and measurement cycles are underway. The internal signal mbsy is shown next. Finally, $\overline{\text{DVALID}}$ is given. As described in the data sheet, $\overline{\text{DVALID}}$ goes active low when data is ready to be retrieved from the DDC114. It stays low until DCLK is taken high and then back low by the user. The text below the $\overline{\text{DVALID}}$ pulse indicates the side of the data available to be read, and arrows help match the data to the corresponding integration. The signals illustrated in Figure 11 through Figure 19 are drawn at approximately the same scale.

In Figure 11, the first state is ncont state 8. The DDC114 always powers up in the ncont mode. In this case, the first state is 8 because CONV is initially low. After the first two states, cont mode operation is reached and the states begin toggling between 4 and 5. From now on, the input is being continuously integrated, either on side A or side B. The time needed for the m/r/az cycle, or t_6, is the same time that determines the boundary between the cont and ncont modes described earlier in the Overview section. $\overline{\text{DVALID}}$ goes low after CONV toggles in time t_7, indicating that data is ready to be retrieved. As shown in Figure 11, there are two values for t_6 and t_7. The reason for this is discussed in the *Special Considerations* section.

See Figure 12 for the timing diagram of the internal operations occurring during continuous mode operation. Table 7 gives the timing specifications in the continuous mode.

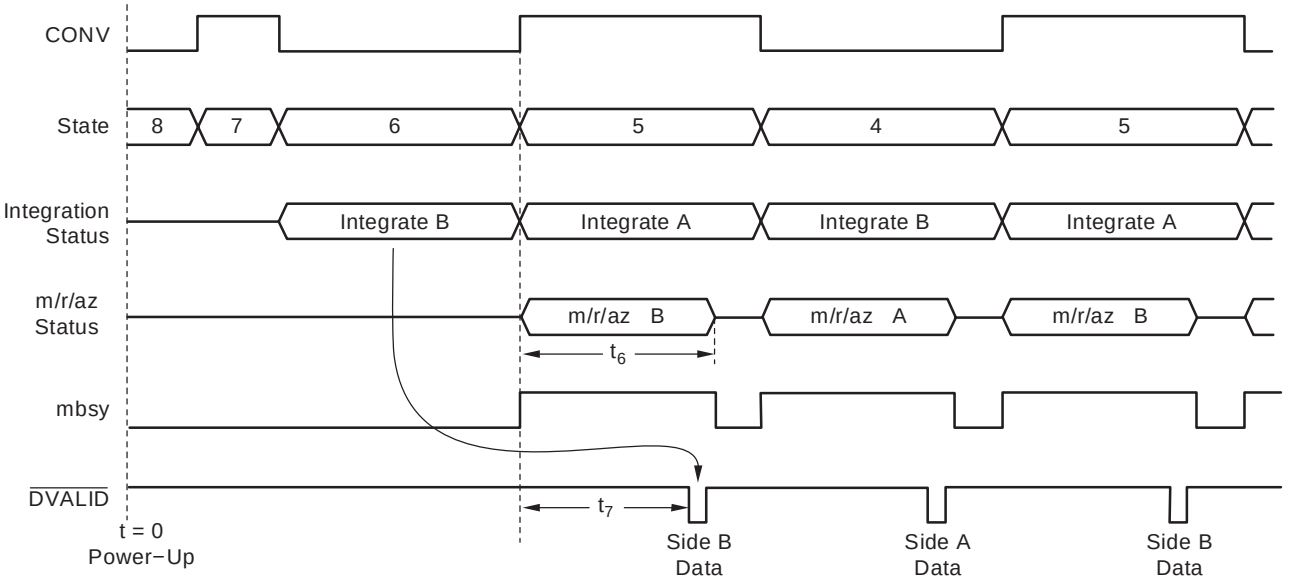

SYMBOL	DESCRIPTION	VALUE (CLK = 4MHz, CLK_4X = 0)	VALUE (CLK = 4.8MHz, CLK_4X = 0)
t_6	Cont Mode m/r/az Cycle	367.50 ± 0.125µs	306.25 ± 0.104µs
t_7	Cont Mode Data Ready	345.00 ± 0.125µs	287.5 ± 0.104µs

Figure 11. Continuous Mode Timing

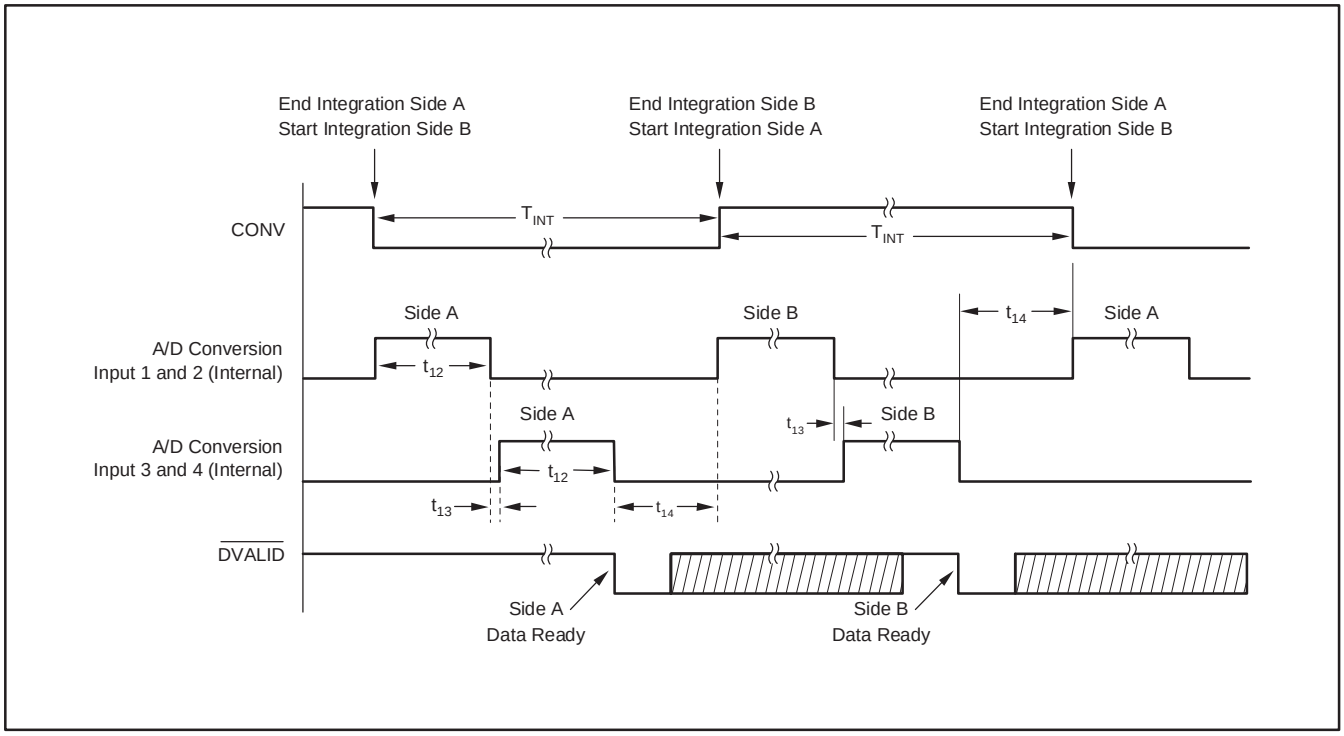

Figure 12. Timing Diagram of the Internal Operation in Continuous Mode of the DDC114

Table 7. Timing for the Internal Operation in Continuous Mode

SYMBOL	DESCRIPTION	CLK = 4MHz, CLK_4X = 0			CLK = 4.8MHz, CLK_4X = 0			UNITS
		MIN	TYP	MAX	MIN	TYP	MAX	
T_{INT}	Integration Period (continuous mode)	400		1,000,000	320		1,000,000	µs
t_{12}	A/D Conversion Time (internally controlled)		169.5			141.25		µs
t_{13}	A/D Conversion Reset Time (internally controlled)		4			3.333		µs
t_{14}	Integrator and A/D Conversion Reset Time (internally controlled)		23			19.167		µs

Ncont Mode

Non-continuous (ncont) mode of operation is intended for ranges 1 to 7. It is not recommended to use Range 0 when operating in non-continuous mode. Figure 13 illustrates operation in ncont mode. The integrations come in pairs (that is, sides A/B or sides B/A) followed by a time during which no integrations occur. During that time, the previous integrations are being measured, reset and auto-zeroed. Before the DDC114 can advance to states 3 or 6, both sides A and B must be finished with the m/r/az cycle, which takes time t_{10}. When the m/r/az cycles are completed, time t_{11} is needed to prepare the next side for integration. This time is required for ncont mode because the m/r/az cycle of ncont mode is slightly different from that of cont mode. After the first integration ends, $\overline{\text{DVALID}}$ goes low in time t_8. This time is the same as in cont mode. The second data will be ready in time t_9 after the first data is ready. One result of the naming convention used in this data sheet is that when the DDC114 is operating in ncont mode, it passes through both ncont mode states and cont mode states. For example, in Figure 13, the state pattern is 3, 4, 1, 2, 3, 4, 1, 2, 3, 4 ... where 3 and 4 are cont mode states. *Ncont mode*, by definition, means that for some portion of the time, neither side A nor B is integrating. States that perform an integration are labeled *cont mode states*, while those that do not are called *ncont mode states*. Since integrations are performed in ncont mode, just not continuously, some cont mode states must be used in an ncont mode state pattern.

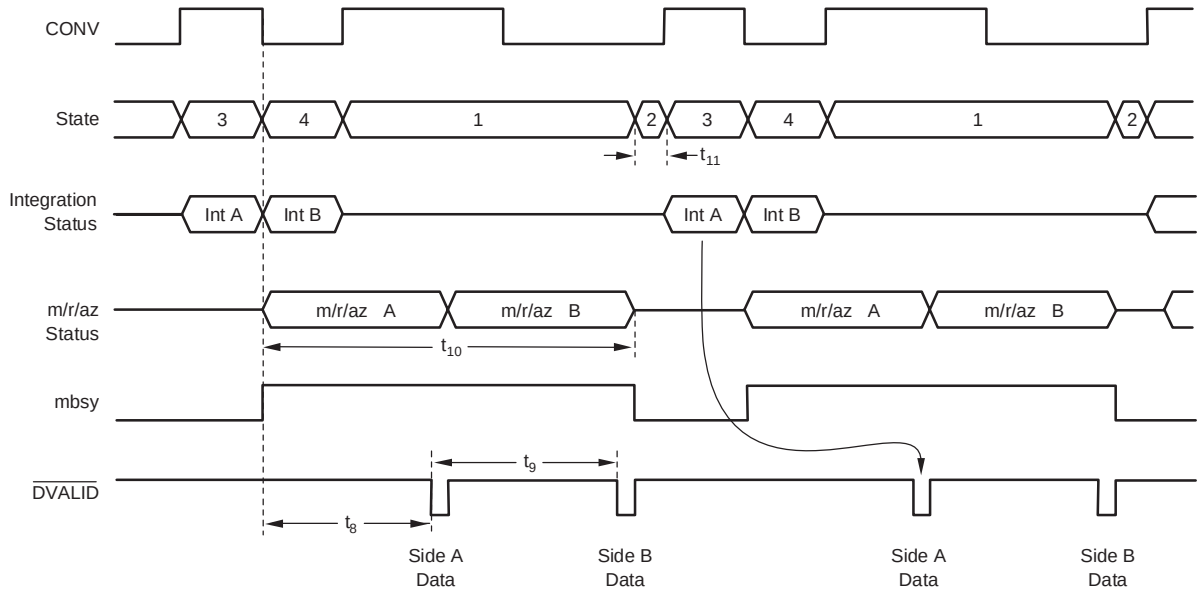

SYMBOL	DESCRIPTION	VALUE (CLK = 4MHz, CLK_4X = 0)	VALUE (CLK = 4.8MHz, CLK_4X = 0)
t_8	1st ncont Mode Data Ready	344.75 ± 0.25µs	287.292 ± 0.208µs
t_9	2nd ncont Mode Data Ready	362.5µs	302.083µs
t_{10}	ncont Mode m/r/az Cycle	725.25 ± 0.25µs	604.375 ± 0.208µs
t_{11}	Prepare Side for Integration	≥ 18µs	≥ 15µs

Figure 13. Non-Continuous Mode Timing

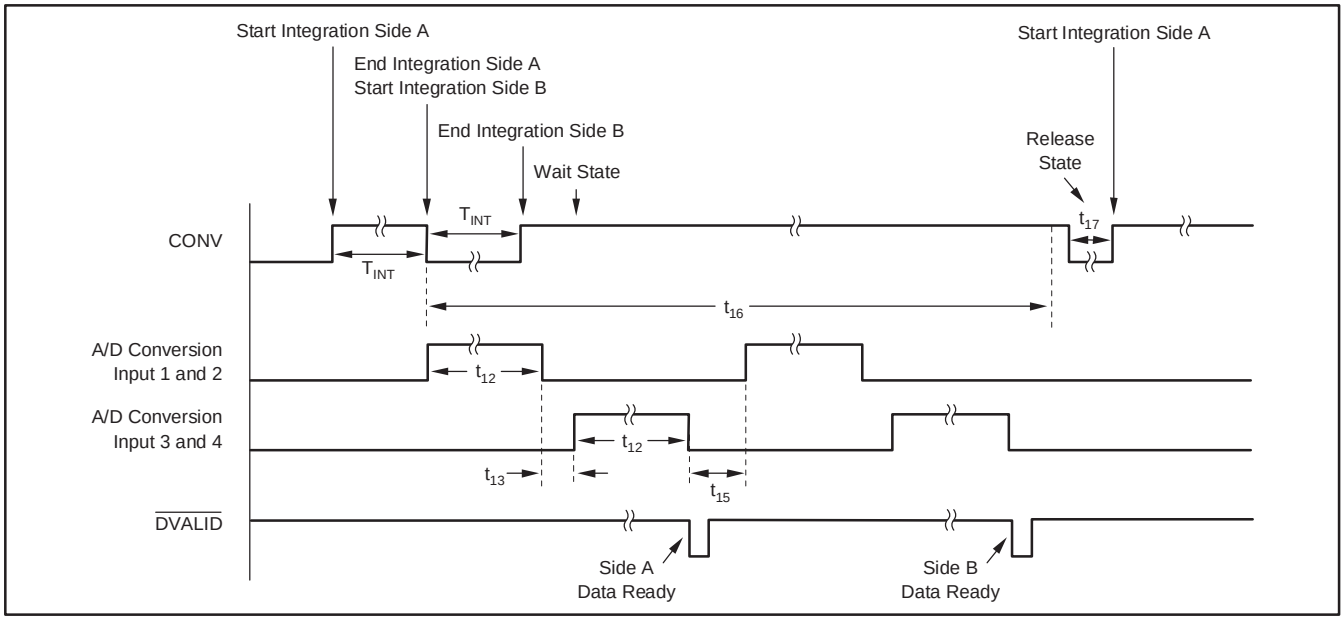

Figure 14. Conversion Detail for the Internal Operation of Non-Continuous Mode with Side A Integrated First

Table 8. Internal Timing for the DDC114 in Non-Continuous Mode

SYMBOL	DESCRIPTION	CLK = 4MHz, CLK_4X = 0			CLK = 4.8MHz, CLK_4X = 0			UNITS
		MIN	TYP	MAX	MIN	TYP	MAX	
T_{INT}	Integration Time (non-continuous mode)	400		1,000,000	320		1,000,000	µs
t_{12}	A/D Conversion Time (internally controlled)		169.5			141.25		µs
t_{13}	A/D Conversion Reset Time (internally controlled)		4			3.333		µs
t_{15}	Integrator and A/D Conversion Reset Time (internally controlled)		19.5			16.25		µs
t_{16}	Total A/D Conversion and Reset Time (internally controlled)	725.25 ± 0.25			604.375 ± 0.208			µs
t_{17}	Release Time	18			15			µs

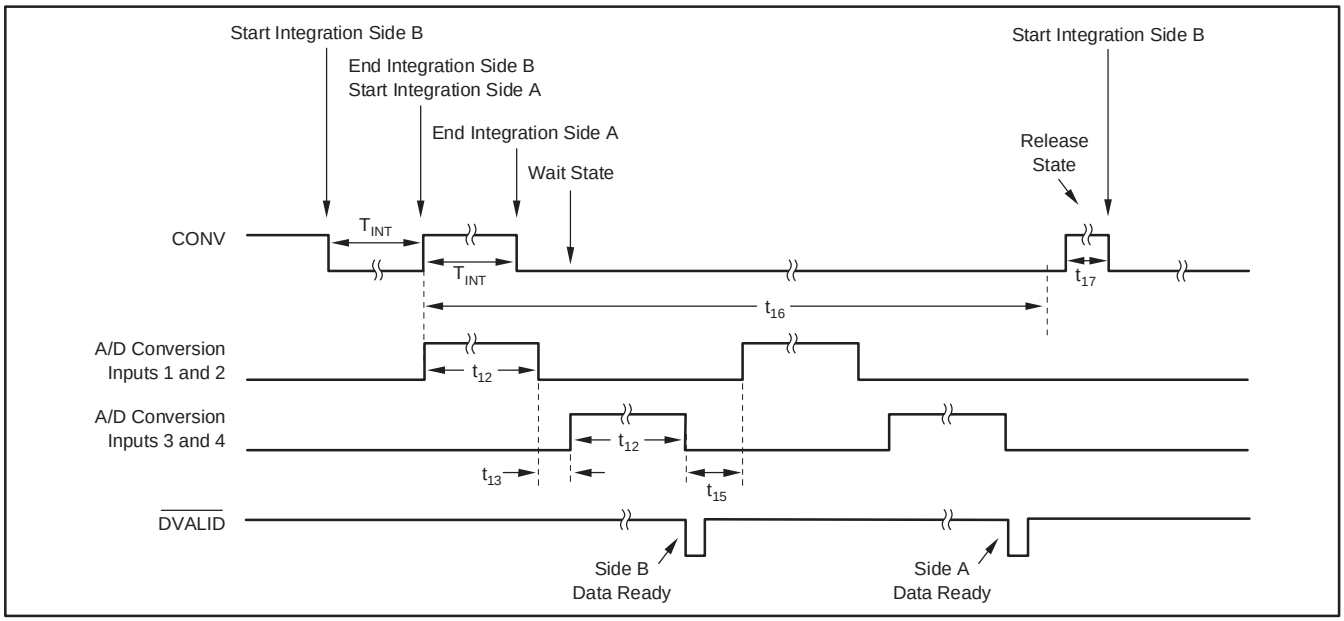

Figure 15. Internal Operation Timing Diagram of Non-Continuous Mode with Side B Integrated First

Looking at the state diagram, one can see that the CONV pattern needed to generate a given state progression is not unique. Upon entering states 1 or 8, the DDC114 remains in those states until mbsy goes low, independent of CONV. As long as the m/r/az cycle is underway, the state machine ignores CONV (see Figure 10, page 14). The top two signals in Figure 16 are different CONV patterns that produce the same state. This feature allows flexibility in generating ncont mode CONV patterns. For example, the DDC114 Evaluation Fixture operates in ncont mode by generating a square wave with pulse width < t_6. Figure 17 illustrates operation in ncont mode using a 50% duty cycle CONV signal with T_{INT} = 512 CLK periods. Care must be exercised when using a square wave to generate CONV. There are certain integration times that must be avoided since they produce very short intervals for state 2 (or state 7 if CONV is inverted). As seen in the state diagram, the state progresses from 2 to 3 as soon as CONV is high. The state machine does not insure that the duration of state 2 is long enough to properly prepare the next side for integration (t_{11}). This must be done by the user with proper timing of CONV. For example, if CONV is a square wave with T_{INT} = 970 CLK periods, state 2 will only be 9 CLK periods long; therefore, t_{11} will not be met.

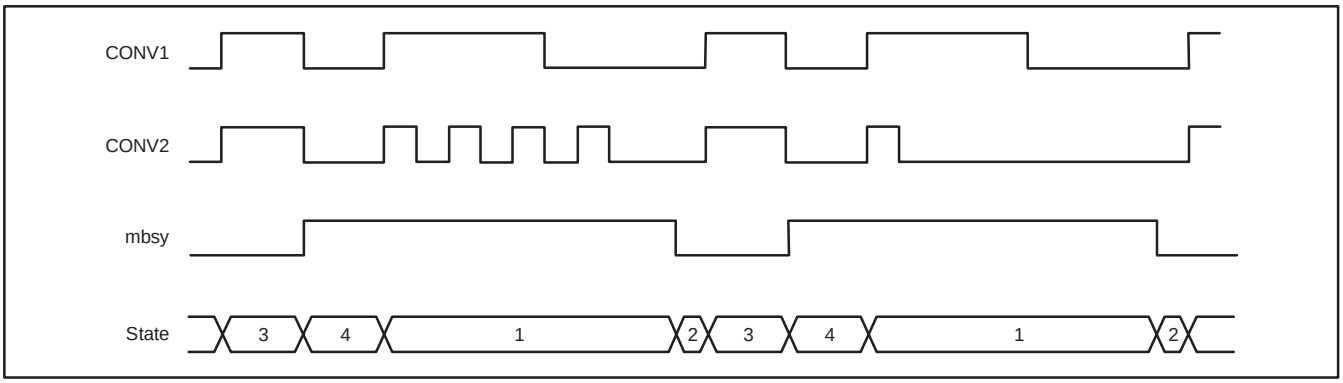

Figure 16. Equivalent CONV Signals in Non-Continuous Mode

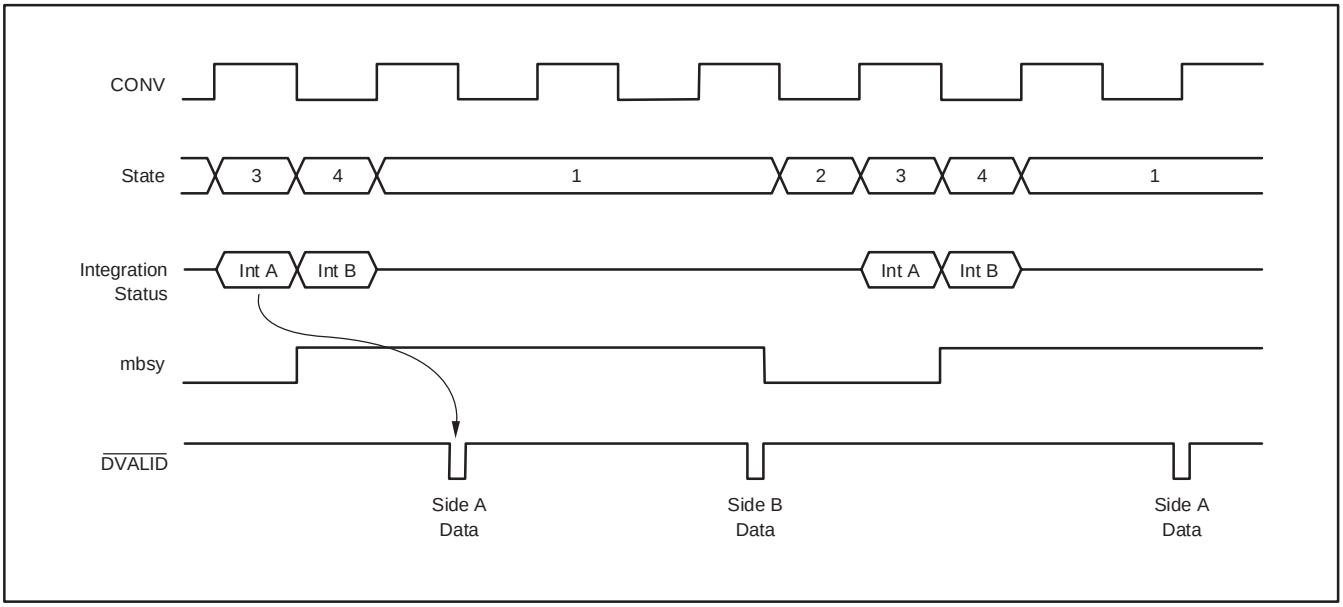

Figure 17. Non-Continuous Mode Timing with a 50% Duty Cycle CONV Signal

Changing Between Modes

Changing from cont to ncont mode occurs whenever $T_{INT} < t_6$. Figure 18 shows an example of this transition. In this figure, cont mode is entered when the integration on side A is completed before the m/r/az cycle on side B is complete. The DDC114 completes the measurement on sides B and A during states 8 and 7 with the input signal shorted to ground. Ncont integration begins with state 6.

Changing from ncont to cont mode occurs when T_{INT} is increased so that T_{INT} is always $\geq t_6$ as shown in Figure 19 (see Figure 14 and Table 8, page 18). With a longer T_{INT}, the m/r/az cycle has enough time to finish before the next integration begins and continuous integration of the input signal is possible. For the special case of the very first integration when changing to cont mode, T_{INT} can be $< t_6$. This is allowed because there is no simultaneous m/r/az cycle on the side B during state 3—there is no need to wait for it to finish before ending the integration on side A.

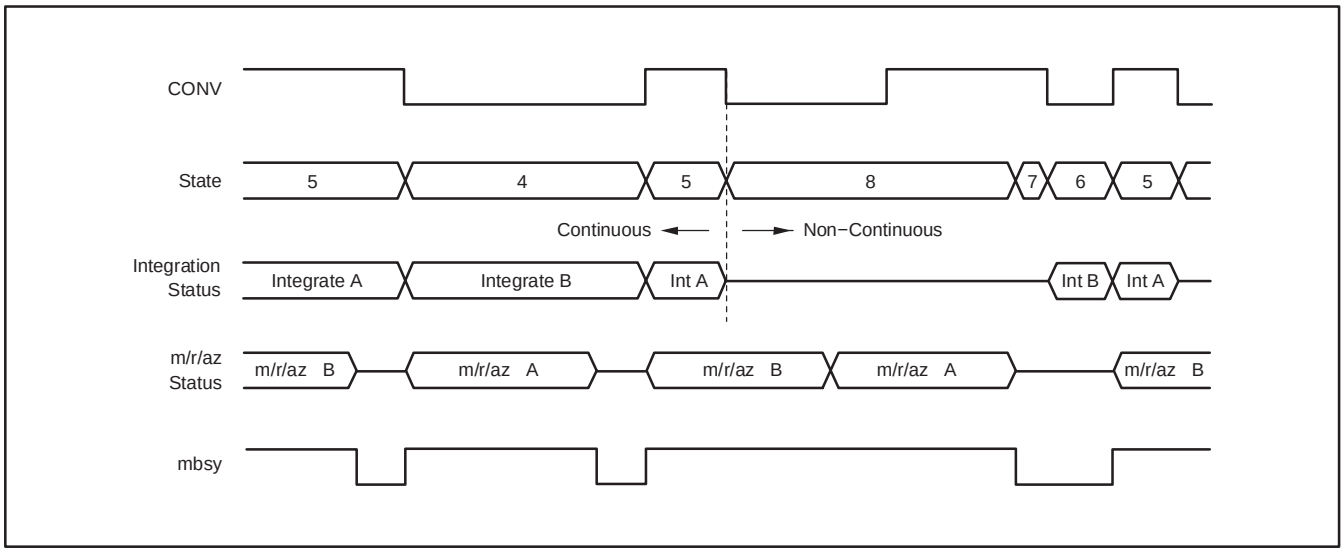

Figure 18. Changing from Continuous Mode to Non-Continuous Mode

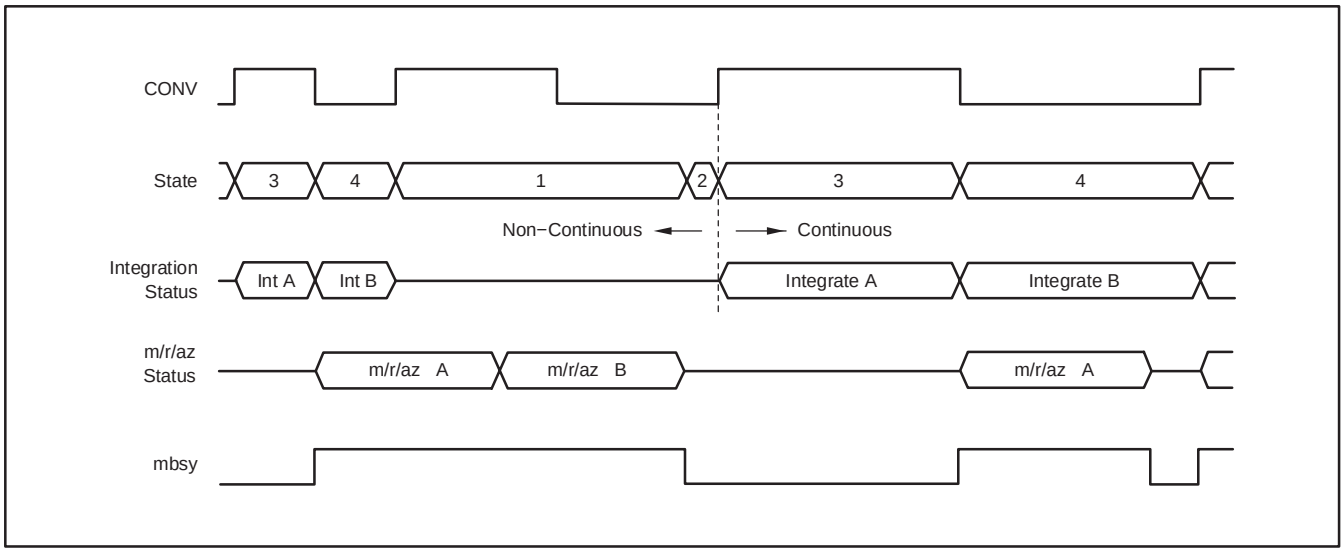

Figure 19. Changing from Non-Continuous Mode to Continuous Mode

DATA FORMAT (FORMAT)

The serial output data is provided in an offset binary code as shown in Table 9. The digital input pin FORMAT selects how many bits are used in the output word. When FORMAT is high (1), 20 bits are used. When FORMAT is low (0), the lower 4 bits are truncated so that only 16 bits are used. Note that the LSB size is 16 times bigger when FORMAT = 0. An offset is included in the output to allow slightly negative inputs, from board leakages for example, from clipping the reading. This offset is approximately 0.4% of the positive full−scale.

Table 9. Ideal Output Code(1) vs Input Signal

INPUT SIGNAL	IDEAL OUTPUT CODE FORMAT = HIGH (1)	IDEAL OUTPUT CODE FORMAT = LOW (0)
≥ 100% FS	1111 1111 1111 1111 1111	1111 1111 1111 1111
0.001531% FS	0000 0001 0000 0001 0000	0000 0001 0000 0001
0.001436% FS	0000 0001 0000 0000 1111	0000 0001 0000 0000
0.000191% FS	0000 0001 0000 0000 0010	0000 0001 0000 0000
0.000096% FS	0000 0001 0000 0000 0001	0000 0001 0000 0000
0% FS	0000 0001 0000 0000 0000	0000 0001 0000 0000
−0.3955% FS	0000 0000 0000 0000 0000	0000 0000 0000 0000

(1) Excludes the effects of noise, INL, offset, and gain errors.

DATA RETRIEVAL

In both the continuous and non-continuous modes of operation, the data from the last conversion is available for retrieval on the falling edge of $\overline{\text{DVALID}}$ (see Figure 20 and Table 10, on page 22). Data is shifted out on the falling edge of the data clock, DCLK. Make sure not to retrieve data while CONV changes as this can introduce noise. Stop activity on DCLK at least 10µs before or after a CONV transition.

Setting the FORMAT pin = 0 (16-bit output word) reduces the time needed to retrieve data by 20%, since there are fewer bits to shift out. This time reduction can be useful in multichannel systems requiring only 16 bits of resolution.

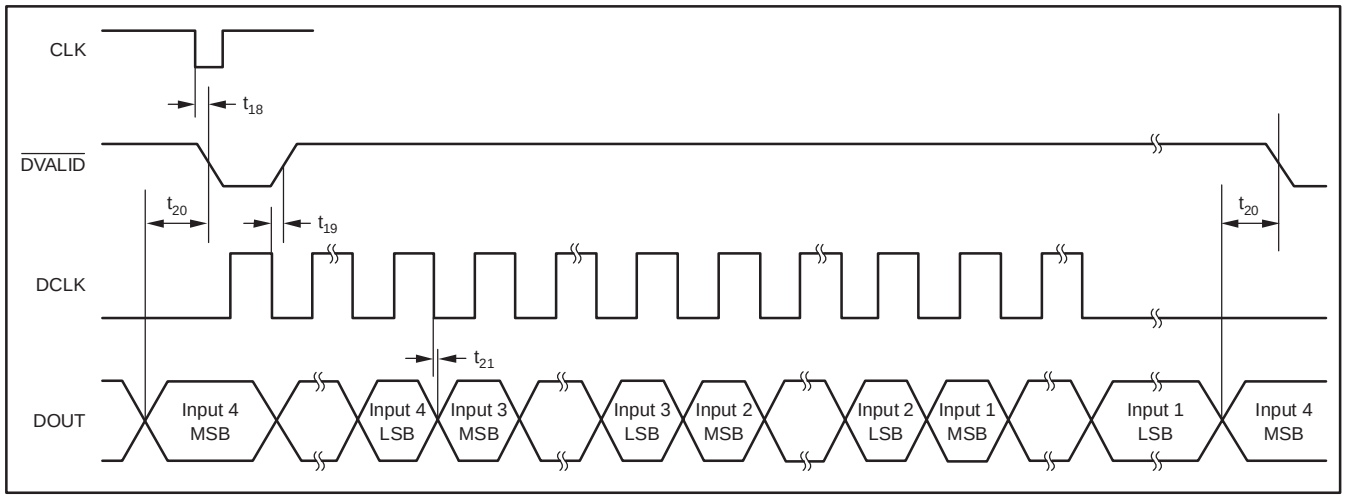

Figure 20. Digital Interface Timing Diagram for Data Retrieval From a Single DDC114

Table 10. Timing for the DDC114 Data Retrieval

SYMBOL	DESCRIPTION	CLK = 4MHz, CLK_4X = 0			CLK = 4.8MHz, CLK_4X = 0			UNITS
		MIN	TYP	MAX	MIN	TYP	MAX	
t_{18}	Propagation Delay from Falling Edge of CLK to $\overline{\text{DVALID}}$ LOW	5			5			ns
t_{19}	Propagation Delay from Falling Edge of DCLK to $\overline{\text{DVALID}}$ HIGH	5			5			ns
t_{20}	Hold Time that DOUT is Valid Before the Falling Edge of $\overline{\text{DVALID}}$		1.75			1.458		µs
t_{21}	Hold Time that DOUT is Valid After Falling Edge of DCLK	5			5			ns
t_{21A}(1)	Propagation Delay from Falling Edge of DCLK to Valid DOUT			10			10	ns

(1) With a maximum load of one DDC114 (4pF typical) with an additional load of 5pF.

SPECIAL CONSIDERATIONS

Cascading Multiple Converters

Multiple DDC114 units can be connected in serial configuration, as illustrated in Figure 21.

DOUT can be used with DIN to daisy-chain several DDC114 devices together to minimize wiring. In this mode of operation, the serial data output is shifted through multiple DDC114s, as illustrated in Figure 21.

See Figure 22 for the timing diagram when the DIN input is used to daisy-chain several devices. Table 11 gives the timing specification for data retrieval using DIN.

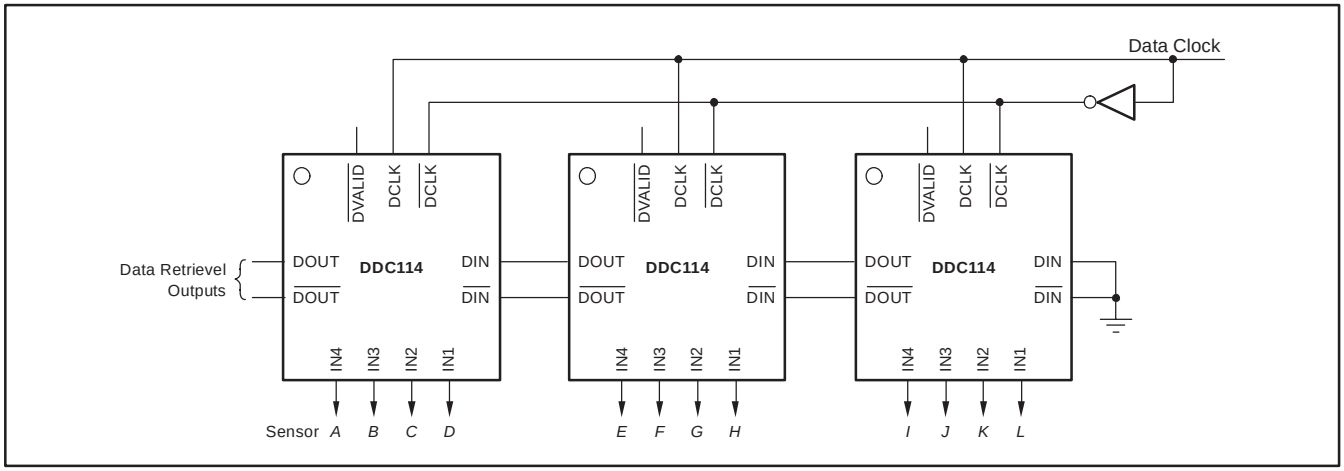

Figure 21. Daisy-Chained DDC114s

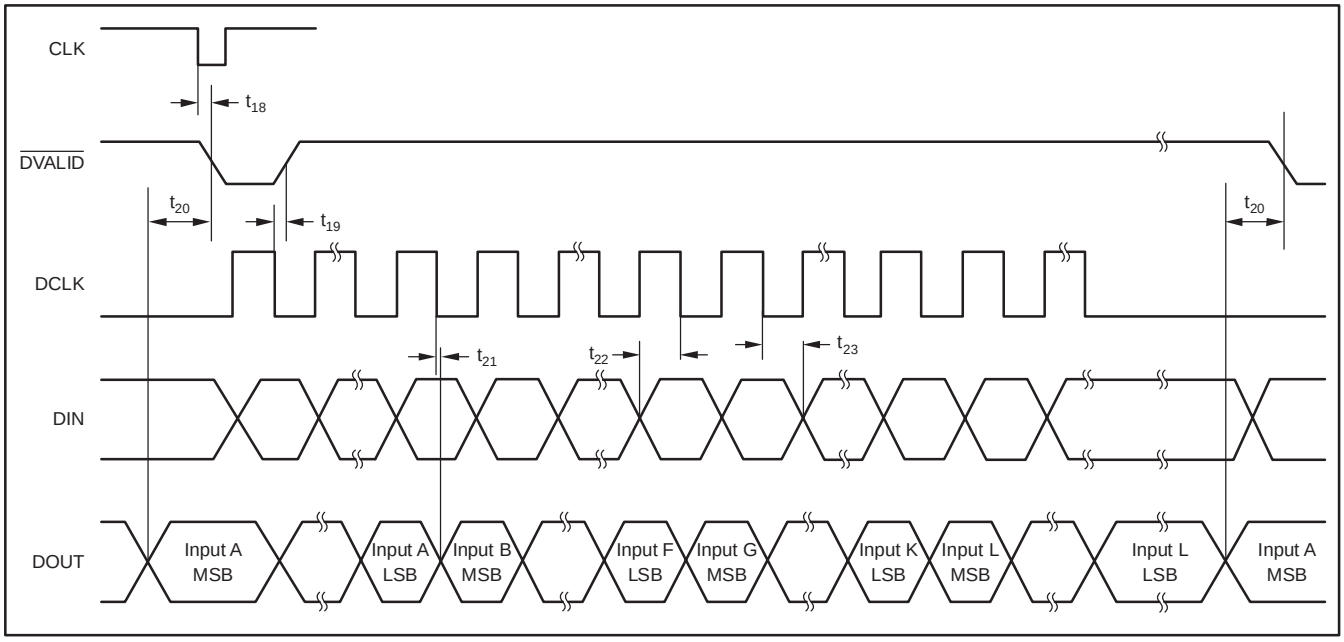

Figure 22. Timing Diagram When Using the DIN Function of the DDC114

Table 11. Timing for the DDC114 Data Retrieval Using DIN

SYMBOL	DESCRIPTION	MIN	TYP	MAX	UNITS
t_{22}	Set-Up Time From DIN to Falling Edge of DCLK	5			ns
t_{23}	Hold Time For DIN After Falling Edge of DCLK	4			ns

RETRIEVAL *BEFORE* CONV TOGGLES (CONTINUOUS MODE)

Data retrieval before CONV toggles is the most straightforward method. Data retrieval begins soon after $\overline{\text{DVALID}}$ goes low and finishes before CONV toggles; as shown in Figure 23. For best performance, data retrieval must stop t_{28} before CONV toggles. This method is most appropriate for longer integration times. The maximum time available for readback is $T_{INT} - t_{27} - t_{28}$. For DCLK = 10MHz and CLK = 4MHz, the maximum number of DDC114s that can be daisy-chained together (FORMAT = high) is calculated by Equation 1:

$$\frac{T_{INT} - 355.125\mu s}{80\tau_{DCLK}} \quad (1)$$

NOTE: $64\tau_{DCLK}$ is used for FORMAT = low.

where τ_{DCLK} is the period of the data clock. For example, if T_{INT} = 1000µs and DCLK = 10MHz, the maximum number of DDC114s (FORMAT = high) is shown in Equation 2:

$$\frac{1000\mu s - 355.125\mu s}{(80)(100ns)} = 80.60 \rightarrow 80 \text{ DDC114s} \quad (2)$$

(or 100 for FORMAT = low).

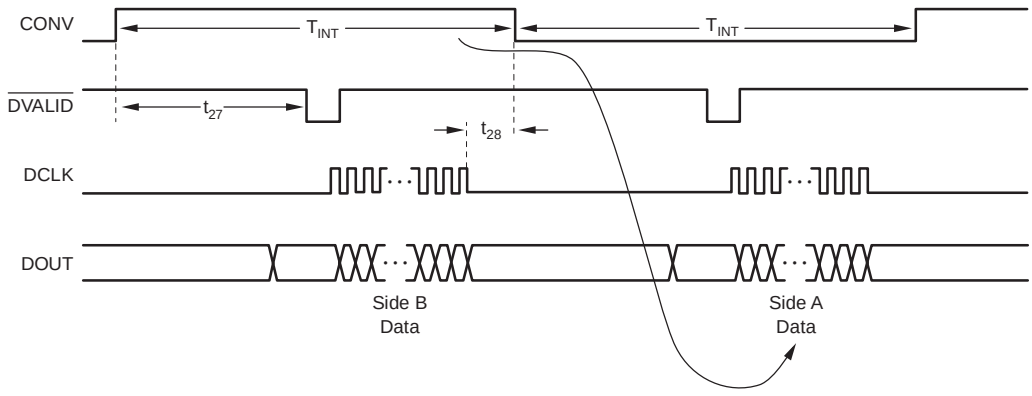

SYMBOL	DESCRIPTION	CLK = 4MHz, CLK_4X = 0			CLK = 4.8MHz, CLK_4X = 0			UNITS
		MIN	TYP	MAX	MIN	TYP	MAX	
t_{27}	Cont Mode Data Ready		345.00 ± 0.125			287.5 ± 0.104		µs
t_{28}	Data Retrieval Shutdown Before Edge of CONV	10			10			µs

Figure 23. Readback *Before* CONV Toggles

RETRIEVAL *AFTER* CONV TOGGLES (CONTINUOUS MODE)

For shorter integration times, more time is available if data retrieval begins after CONV toggles and ends before the new data is ready. Data retrieval must wait t_{29} after CONV toggles before beginning. See Figure 24 for an example of this. The maximum time available for retrieval is $t_{27} - t_{29} - t_{26}$ (344.875µs – 10µs – 1.75µs for CLK = 4MHz), regardless of T_{INT}. The maximum number of DDC114s that can be daisy-chained together (FORMAT = high) is calculated by Equation 3:

$$\frac{333.125\mu s}{80\tau_{DCLK}} \quad (3)$$

NOTE: $64\tau_{DCLK}$ is used for FORMAT = low.

For DCLK = 10MHz, the maximum number of DDC114s is 41 (or 52 for FORMAT = low).

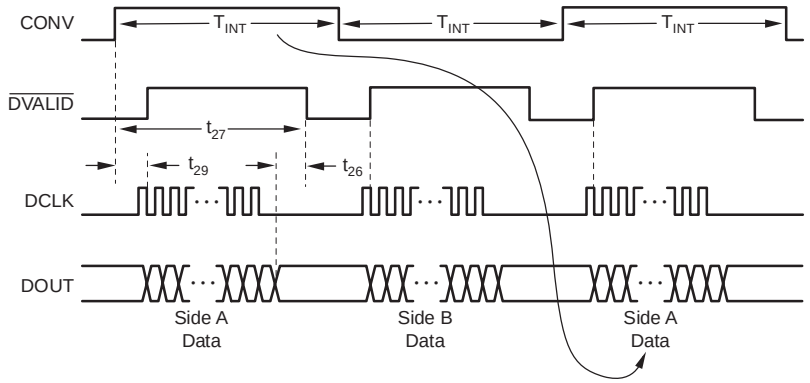

SYMBOL	DESCRIPTION	CLK = 4MHz, CLK_4X = 0			CLK = 4.8MHz, CLK_4X = 0			UNITS
		MIN	TYP	MAX	MIN	TYP	MAX	
t_{26}	Hold Time that DOUT is Valid Before Falling Edge of $\overline{DVALID}$		1.75			1.458		µs
t_{27}	Cont Mode Data Ready		345.00 ± 0.125			287.5 ± 0.104		µs
t_{29}	Data Retrieval Start-Up After Edge of CONV	10			10			µs

Figure 24. Readback *After* CONV Toggles

RETRIEVAL *BEFORE* AND *AFTER* CONV TOGGLES (CONTINUOUS MODE)

For the absolute maximum time for data retrieval, data can be retrieved *before and after* CONV toggles. Nearly all of T_{INT} is available for data retrieval. Figure 25 illustrates how this is done by combining the two previous methods. You must pause the retrieval during CONV toggling to prevent digital noise, as discussed previously, and finish before the next data is ready. The maximum number of DDC114s that can be daisy-chained together (FORMAT = high) is:

$$\frac{T_{INT} - 20\mu s - 1.75\mu s}{80\tau_{DCLK}}$$

NOTE: $64\tau_{DCLK}$ is used for FORMAT = low.

For T_{INT} = 400µs and DCLK = 10MHz, the maximum number of DDC114s is 47 (or 59 for FORMAT = low).

RETRIEVAL: NONCONTINUOUS MODE

Retrieving in noncontinuous mode is slightly different than compared with the continuous mode. As illustrated in Figure 26, $\overline{DVALID}$ goes low in time t_{30} after the first integration completes. If T_{INT} is shorter than this time, all of t_{31} is available to retrieve data before the other side data is ready. For $T_{INT} > t_{30}$, the first integration data is ready before the second integration completes. Data retrieval must be delayed until the second integration completes, leaving less time available for retrieval. The time available is $t_{31} - (T_{INT} - t_{30})$. The second integration data must be retrieved before the next round of integration begins. This time is highly dependent on the pattern used to generate CONV. As with the continuous mode, data retrieval must halt before and after CONV toggles (t_{28}, t_{29}) and be completed before new data is ready (t_{26}).

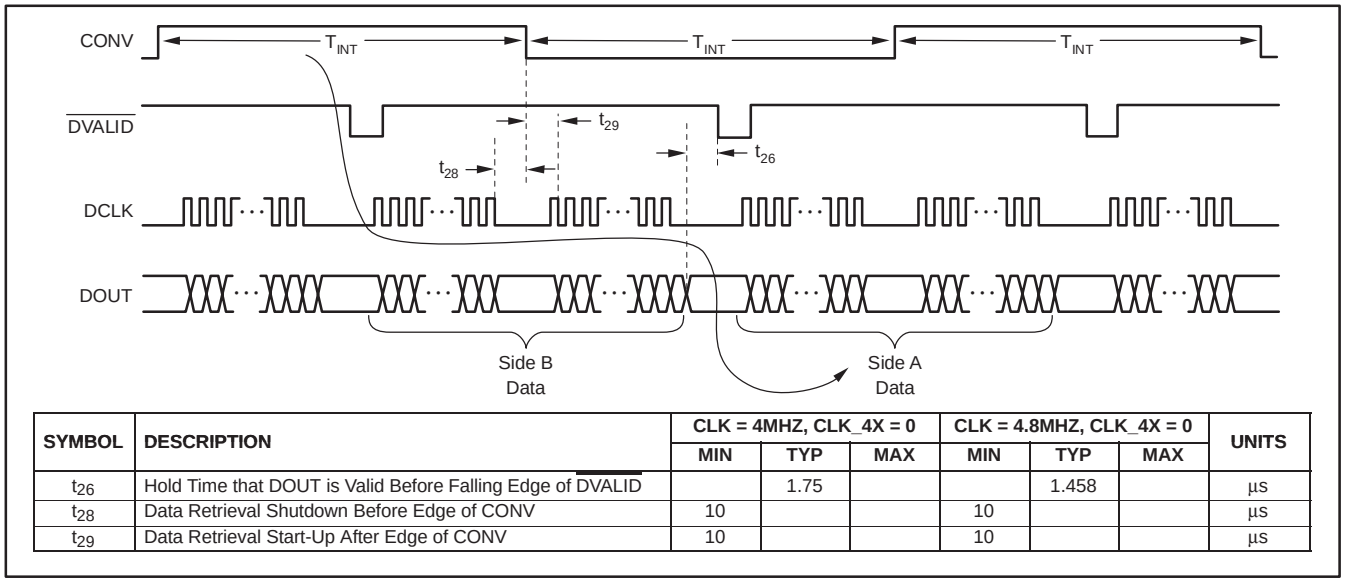

SYMBOL	DESCRIPTION	CLK = 4MHZ, CLK_4X = 0			CLK = 4.8MHZ, CLK_4X = 0			UNITS
		MIN	TYP	MAX	MIN	TYP	MAX	
t_{26}	Hold Time that DOUT is Valid Before Falling Edge of $\overline{DVALID}$		1.75			1.458		µs
t_{28}	Data Retrieval Shutdown Before Edge of CONV	10			10			µs
t_{29}	Data Retrieval Start-Up After Edge of CONV	10			10			µs

Figure 25. Readback *Before and After* CONV Toggles

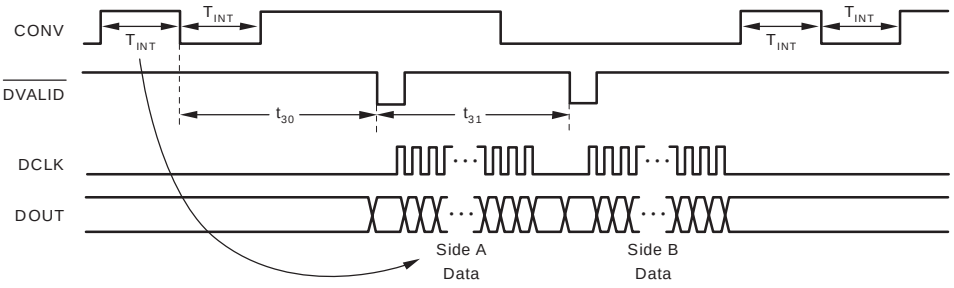

SYMBOL	DESCRIPTION	CLK = 4MHz, CLK_4X = 0			CLK = 4.8MHz, CLK_4X = 0			UNITS
		MIN	TYP	MAX	MIN	TYP	MAX	
t_{30}	1st ncont Mode Data Ready		344.75 ± 0.25			287.292 ± 0.208		µs
t_{31}	2nd ncont Mode Data Ready		362.500			302.083		µs

Figure 26. Readback in Non-Continuous Mode

POWER-UP SEQUENCING

Prior to power-up, all digital and analog inputs must be low. After the power supplies have settled, release $\overline{\text{RESET}}$ after time t_{32}. (See Figure 28 and Table 12.) Wait for time t_{33} to begin applying the digital signals CONV and CLK. The first CONV pulse will complete the release state and begin integration.

LAYOUT

POWER SUPPLIES AND GROUNDING

Both AVDD and DVDD should be as quiet as possible. It is particularly important to eliminate noise from AVDD that is non-synchronous with the DDC114 operation. Figure 27 illustrates two acceptable ways to supply power to the DDC114. The first case shows two separate +5V supplies for AVDD and DVDD. In this case, each +5V supply of the DDC114 should be bypassed with 10µF solid tantalum capacitors and 0.1µF ceramic capacitors. The second case shows the DVDD power supply derived from the AVDD supply with a < 10Ω isolation resistor. In both cases, the 0.1µF capacitors should be placed as close to the DDC114 package as possible. It is recommended that both the analog and digital grounds (AGND and DGND) be connected to a single ground plane on the printed circuit board (PCB).

THERMAL PAD

It is strongly recommended that the thermal pad on the DDC114 be connected to ground on the PCB. No PCB traces should be routed underneath the thermal pad.

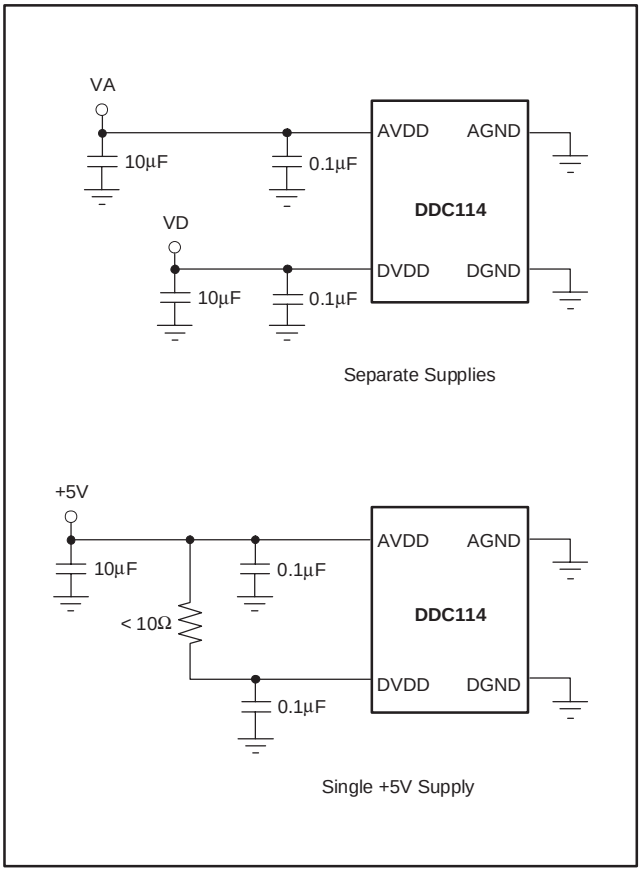

Figure 27. Power-Supply Connection Options

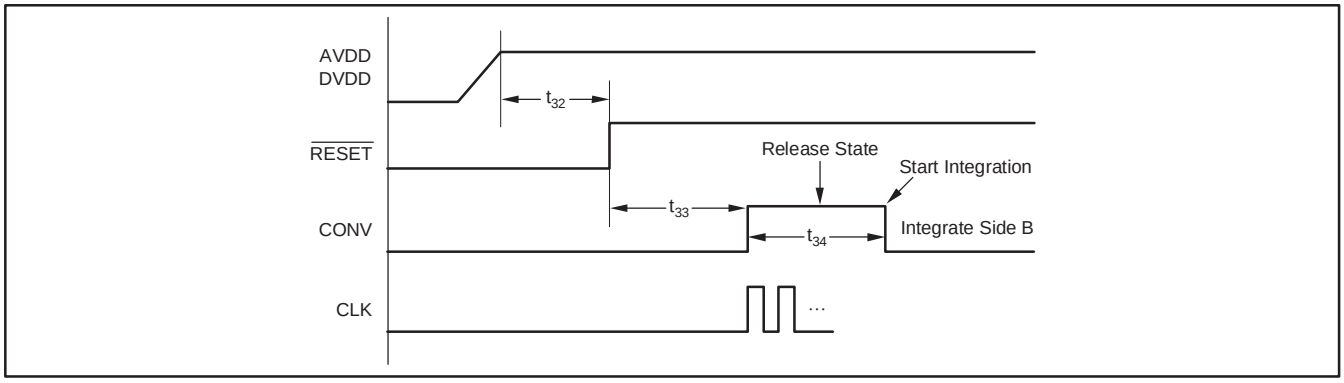

Figure 28. Timing Diagram at Power-Up of the DDC114

Table 12. Timing for the DDC114 Power-Up Sequence

SYMBOL	DESCRIPTION	MIN	TYP	MAX	UNITS
t_{32}	Power Supplies Settled to $\overline{\text{RESET}}$ Release	10			ms
t_{33}	$\overline{\text{RESET}}$ Release to CONV, CLK Begin	50			µs
t_{34}	First CONV Pulse Width	50			µs

Shielding Analog Signal Paths

As with any precision circuit, careful PCB layout ensures the best performance. It is essential to make short, direct interconnections and avoid stray wiring capacitance—particularly at the analog input pins. Digital signals should be kept as far from the analog input signals as possible on the PCB.

Input shielding practices should be taken into consideration when designing the circuit layout for the DDC114. The inputs to the DDC114 are high impedance and extremely sensitive to extraneous noise. Leakage currents between the PCB traces can exceed the input bias current of the DDC114 if shielding is not implemented. Figure 29 illustrates an acceptable approach to this problem. A PC ground plane is placed around the inputs of the DDC114. This shield helps minimize coupled noise into the input pins.

This approach reduces leakage effects by surrounding these sensitive pins with a low impedance analog ground. Leakage currents from other portions of the circuit will flow harmlessly to the low impedance analog ground rather than into the analog input stage of the DDC114.

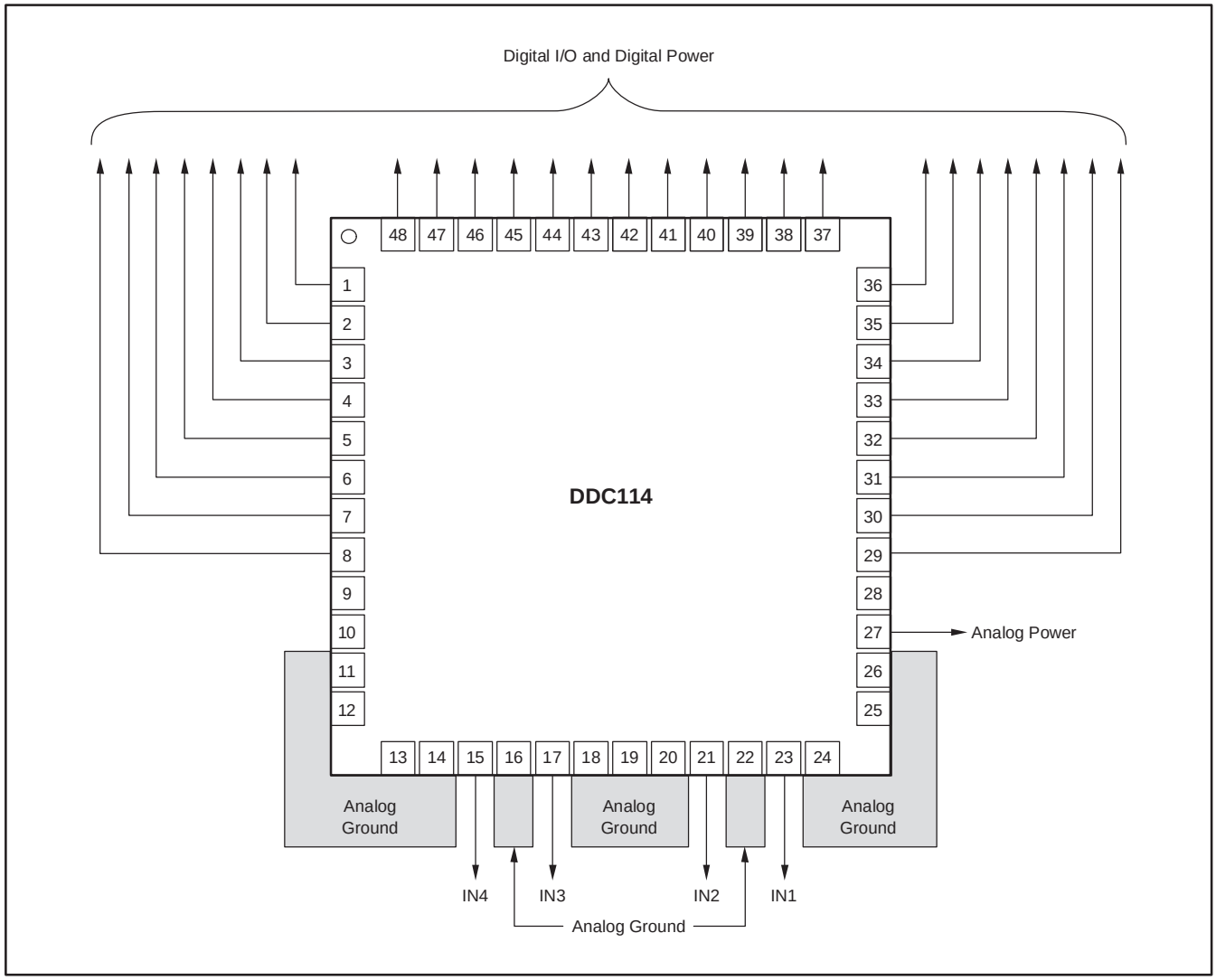

Figure 29. Recommended Shield for DDC114 Layout Design

Revision History

DATE	REV	PAGE	SECTION	DESCRIPTION
4/09	C	1	Front Page	Updated front page appearance.
		9	Theory of Operation	Changed last sentence of first paragraph on page 9.

NOTE: Page numbers for previous revisions may differ from page numbers in the current version.

PACKAGING INFORMATION

Orderable Device	Status (1)	Package Type	Package Drawing	Pins	Package Qty	Eco Plan (2)	Lead/Ball Finish (6)	MSL Peak Temp (3)	Op Temp (°C)	Device Marking (4/5)	Samples
DDC114IRTCR	ACTIVE	VQFN	RTC	48	2500	Green (RoHS & no Sb/Br)	SN	Level-3-260C-168 HR	-40 to 85	DDC114	Samples
DDC114IRTCT	ACTIVE	VQFN	RTC	48	250	Green (RoHS & no Sb/Br)	SN	Level-3-260C-168 HR	-40 to 85	DDC114	Samples

(1) The marketing status values are defined as follows:
ACTIVE: Product device recommended for new designs.
LIFEBUY: TI has announced that the device will be discontinued, and a lifetime-buy period is in effect.
NRND: Not recommended for new designs. Device is in production to support existing customers, but TI does not recommend using this part in a new design.
PREVIEW: Device has been announced but is not in production. Samples may or may not be available.
OBSOLETE: TI has discontinued the production of the device.

(2) **RoHS:** TI defines "RoHS" to mean semiconductor products that are compliant with the current EU RoHS requirements for all 10 RoHS substances, including the requirement that RoHS substance do not exceed 0.1% by weight in homogeneous materials. Where designed to be soldered at high temperatures, "RoHS" products are suitable for use in specified lead-free processes. TI may reference these types of products as "Pb-Free".
RoHS Exempt: TI defines "RoHS Exempt" to mean products that contain lead but are compliant with EU RoHS pursuant to a specific EU RoHS exemption.
Green: TI defines "Green" to mean the content of Chlorine (Cl) and Bromine (Br) based flame retardants meet JS709B low halogen requirements of <=1000ppm threshold. Antimony trioxide based flame retardants must also meet the <=1000ppm threshold requirement.

(3) MSL, Peak Temp. - The Moisture Sensitivity Level rating according to the JEDEC industry standard classifications, and peak solder temperature.

(4) There may be additional marking, which relates to the logo, the lot trace code information, or the environmental category on the device.

(5) Multiple Device Markings will be inside parentheses. Only one Device Marking contained in parentheses and separated by a "~" will appear on a device. If a line is indented then it is a continuation of the previous line and the two combined represent the entire Device Marking for that device.

(6) Lead/Ball Finish - Orderable Devices may have multiple material finish options. Finish options are separated by a vertical ruled line. Lead/Ball Finish values may wrap to two lines if the finish value exceeds the maximum column width.

Important Information and Disclaimer: The information provided on this page represents TI's knowledge and belief as of the date that it is provided. TI bases its knowledge and belief on information provided by third parties, and makes no representation or warranty as to the accuracy of such information. Efforts are underway to better integrate information from third parties. TI has taken and continues to take reasonable steps to provide representative and accurate information but may not have conducted destructive testing or chemical analysis on incoming materials and chemicals. TI and TI suppliers consider certain information to be proprietary, and thus CAS numbers and other limited information may not be available for release.

In no event shall TI's liability arising out of such information exceed the total purchase price of the TI part(s) at issue in this document sold by TI to Customer on an annual basis.

TAPE AND REEL INFORMATION

REEL DIMENSIONS

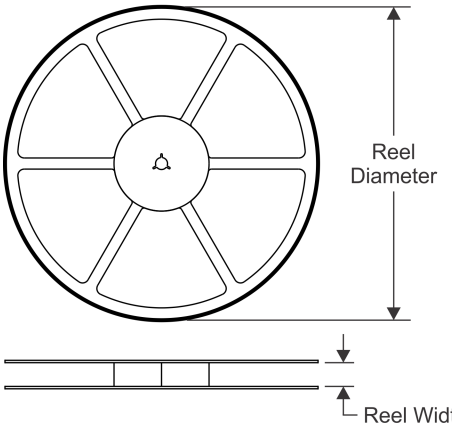

TAPE DIMENSIONS

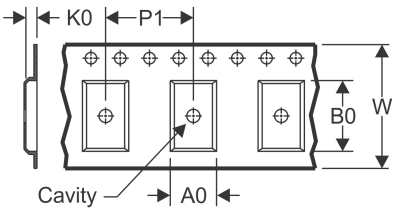

A0	Dimension designed to accommodate the component width
B0	Dimension designed to accommodate the component length
K0	Dimension designed to accommodate the component thickness
W	Overall width of the carrier tape
P1	Pitch between successive cavity centers

QUADRANT ASSIGNMENTS FOR PIN 1 ORIENTATION IN TAPE

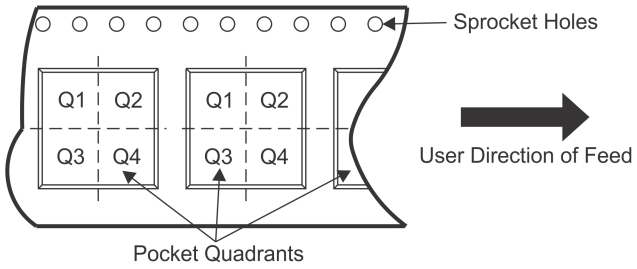

*All dimensions are nominal

Device	Package Type	Package Drawing	Pins	SPQ	Reel Diameter (mm)	Reel Width W1 (mm)	A0 (mm)	B0 (mm)	K0 (mm)	P1 (mm)	W (mm)	Pin1 Quadrant
DDC114IRTCR	VQFN	RTC	48	2500	330.0	16.4	7.3	7.3	1.5	12.0	16.0	Q2
DDC114IRTCT	VQFN	RTC	48	250	180.0	16.4	7.3	7.3	1.5	12.0	16.0	Q2

TAPE AND REEL BOX DIMENSIONS

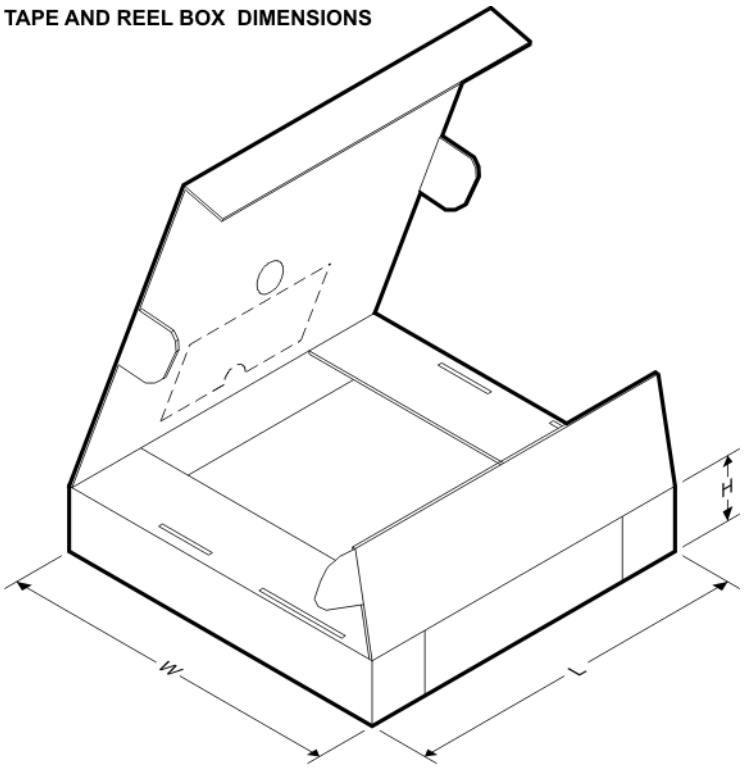

*All dimensions are nominal

Device	Package Type	Package Drawing	Pins	SPQ	Length (mm)	Width (mm)	Height (mm)
DDC114IRTCR	VQFN	RTC	48	2500	350.0	350.0	43.0
DDC114IRTCT	VQFN	RTC	48	250	213.0	191.0	55.0

RTC (S–PVQFN–N48) PLASTIC QUAD FLATPACK NO–LEAD

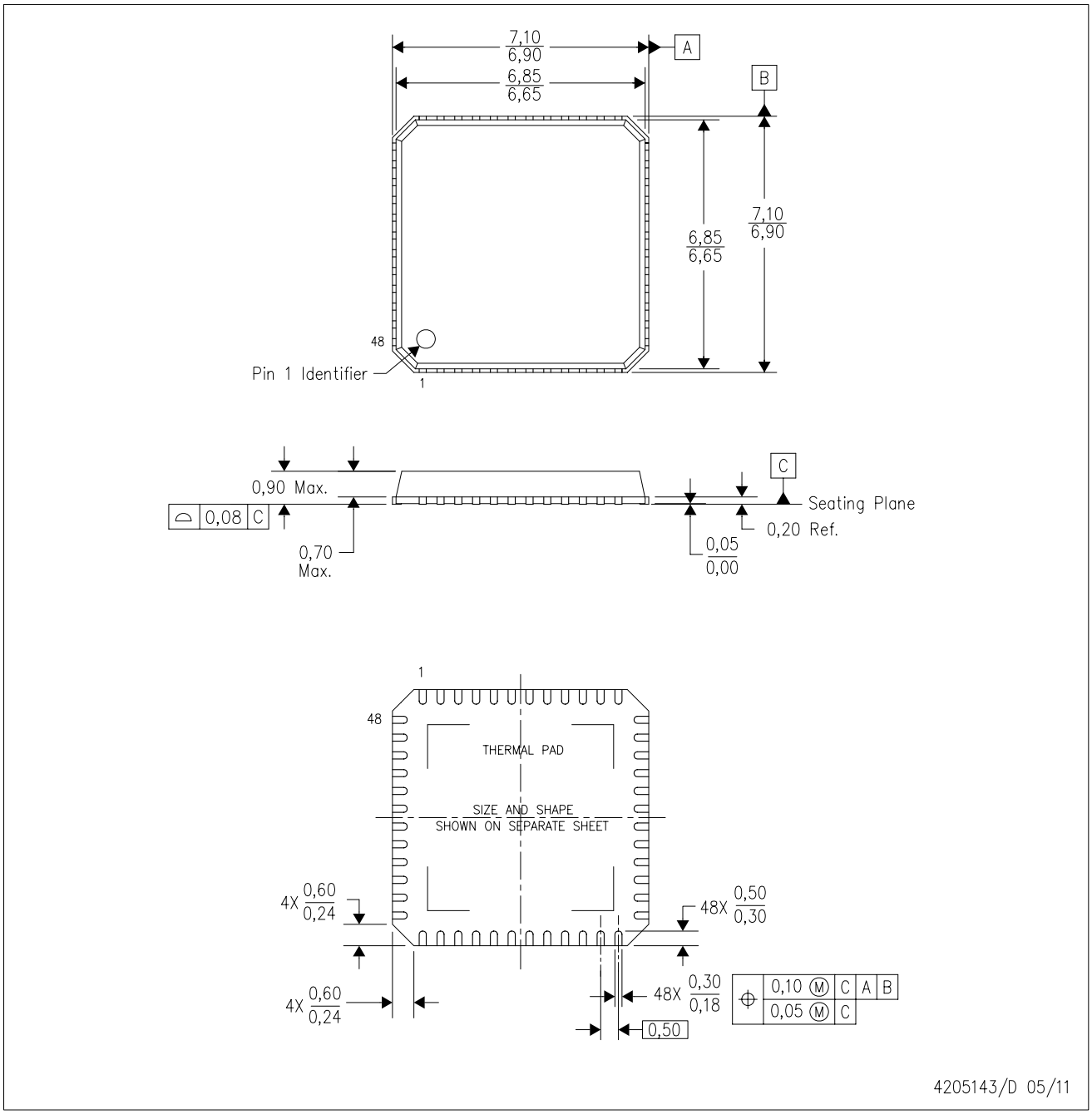

NOTES:
A. All linear dimensions are in millimeters. Dimensioning and tolerancing per ASME Y14.5M–1994.
B. This drawing is subject to change without notice.
C. QFN (Quad Flatpack No–Lead) Package configuration.
D. The package thermal pad must be soldered to the board for thermal and mechanical performance.
E. See the additional figure in the Product Data Sheet for details regarding the exposed thermal pad features and dimensions.

RTC (S–PVQFN–N48) PLASTIC QUAD FLATPACK NO–LEAD

THERMAL INFORMATION

This package incorporates an exposed thermal pad that is designed to be attached directly to an external heatsink. The thermal pad must be soldered directly to the printed circuit board (PCB). After soldering, the PCB can be used as a heatsink. In addition, through the use of thermal vias, the thermal pad can be attached directly to the appropriate copper plane shown in the electrical schematic for the device, or alternatively, can be attached to a special heatsink structure designed into the PCB. This design optimizes the heat transfer from the integrated circuit (IC).

For information on the Quad Flatpack No–Lead (QFN) package and its advantages, refer to Application Report, QFN/SON PCB Attachment, Texas Instruments Literature No. SLUA271. This document is available at www.ti.com.

The exposed thermal pad dimensions for this package are shown in the following illustration.

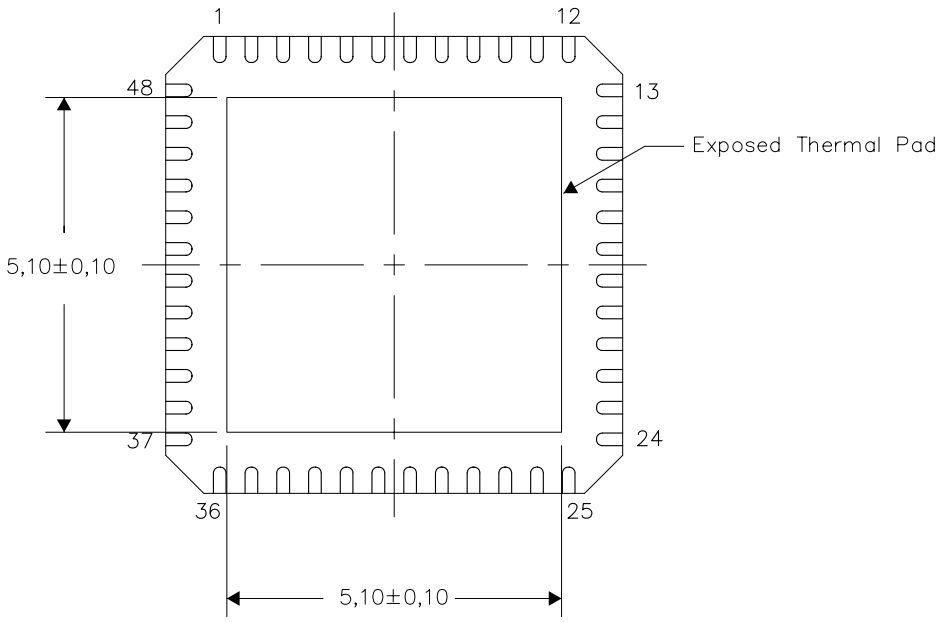

Bottom View

Exposed Thermal Pad Dimensions

4206337–2/H 01/11

NOTE: All linear dimensions are in millimeters

RTC (S–PVQFN–N48) PLASTIC QUAD FLATPACK NO–LEAD

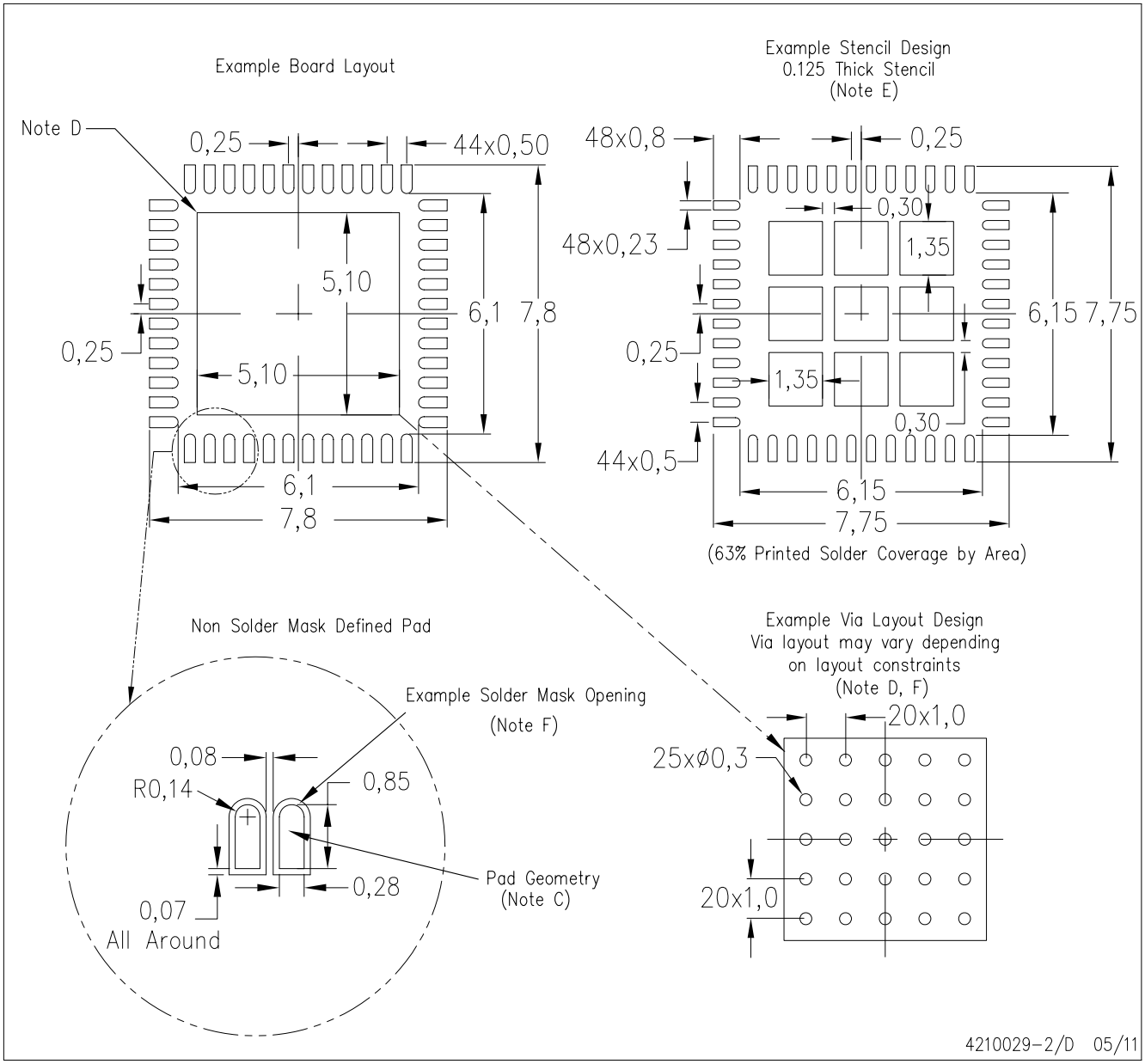

NOTES:
A. All linear dimensions are in millimeters.
B. This drawing is subject to change without notice.
C. Publication IPC–7351 is recommended for alternate designs.
D. This package is designed to be soldered to a thermal pad on the board. Refer to Application Note, Quad Flat–Pack Packages, Texas Instruments Literature No. SLUA271, and also the Product Data Sheets for specific thermal information, via requirements, and recommended board layout. These documents are available at www.ti.com <http://www.ti.com>.
E. Laser cutting apertures with trapezoidal walls and also rounding corners will offer better paste release. Customers should contact their board assembly site for stencil design recommendations. Refer to IPC 7525 for stencil design considerations.
F. Customers should contact their board fabrication site for recommended solder mask tolerances and via tenting recommendations for vias placed in the thermal pad.

IMPORTANT NOTICE AND DISCLAIMER

TI PROVIDES TECHNICAL AND RELIABILITY DATA (INCLUDING DATASHEETS), DESIGN RESOURCES (INCLUDING REFERENCE DESIGNS), APPLICATION OR OTHER DESIGN ADVICE, WEB TOOLS, SAFETY INFORMATION, AND OTHER RESOURCES “AS IS” AND WITH ALL FAULTS, AND DISCLAIMS ALL WARRANTIES, EXPRESS AND IMPLIED, INCLUDING WITHOUT LIMITATION ANY IMPLIED WARRANTIES OF MERCHANTABILITY, FITNESS FOR A PARTICULAR PURPOSE OR NON-INFRINGEMENT OF THIRD PARTY INTELLECTUAL PROPERTY RIGHTS.

These resources are intended for skilled developers designing with TI products. You are solely responsible for (1) selecting the appropriate TI products for your application, (2) designing, validating and testing your application, and (3) ensuring your application meets applicable standards, and any other safety, security, or other requirements. These resources are subject to change without notice. TI grants you permission to use these resources only for development of an application that uses the TI products described in the resource. Other reproduction and display of these resources is prohibited. No license is granted to any other TI intellectual property right or to any third party intellectual property right. TI disclaims responsibility for, and you will fully indemnify TI and its representatives against, any claims, damages, costs, losses, and liabilities arising out of your use of these resources.

TI’s products are provided subject to TI’s Terms of Sale (www.ti.com/legal/termsofsale.html) or other applicable terms available either on ti.com or provided in conjunction with such TI products. TI’s provision of these resources does not expand or otherwise alter TI’s applicable warranties or warranty disclaimers for TI products.

Mailing Address: Texas Instruments, Post Office Box 655303, Dallas, Texas 75265
Copyright © 2020, Texas Instruments Incorporated