Brushless DC Motor

Highly Controllable - Extended Lifespan

MULTIPRODUCTS Company, Inc.

Motor Specifications

Electronically commutated BLDC motors. Featuring a single frame size, neodymium magnet technology, 6 pole stator, and a slotless rotor design. Compared to brush DC motors, Multi's Brushless DC motors are quieter, have longer service life, greater power density, and need no maintenance, making them the best option for modernization and new design-in applications. BLDC motor have three drive options available.

HALL EFFECT: The Hall Effect BLDC motor is designed to connect to an external drive system utilizing the 3 onboard Hall Effect sensors for control and positioning. The choice when developing an in-house drive and controllers for design-in applications.

EZ DRIVE: The EZ Drive BLDC motor utilizes an integral motor drive system. The simple on-board drive system features easy 4-lead power, brake, and forward / reverse wiring. Simple connect and go.

DIGITAL DRIVE: The digital drive BLDC motor utilizes an integral motor drive system capable of using digital input / output signals from external sensors to control the speed, torque, and position of the motor. PWM or VR controller will

Compatible Gearboxes / Reducers: 302, 1600, 3000, 6000, 7000(x), 9000, GBN50, GBP41, GBP52 Series

Features:

- **Little-to-no-maintenance - 20,000+ hour lifespan***
- **Zero electromagnetic interference for external systems**
- **Precision controllability across speed range**
- **Extruded and cast aluminum housing**
- **Heavy-duty ball bearings**

Hall Effect Stock Part Number: DCM - 1031

EZ Drive Stock Part Number: DCM - 1035

Digital Drive Stock Part Number: DCM - 1036

BRUSHLESS DC MOTOR

Information and Specifications



DC Motor Performance

*Estimated life - brush life dependent on duty cycle, application, and environment.

Brushless Size	Small	Medium	Large
Frame Size	42mm	42mm	42mm
Reversible	Yes	Yes	Yes
Motor Life*	20000+ Hours	20000+ Hours	20000+ Hours
Voltage	24V	24V	24V
No Load Speed	5300 RPM	5200 RPM	4800 RPM
No Load Current	0.13 A	0.14 A	0.25 A
Rated Speed	4423 RPM	4619 RPM	4172 RPM
Rated Torque	3.8 OZ-IN.	6.2 OZ-IN.	10 OZ-IN.
Rated Current	0.75 A	1.2 A	1.7 A
Stall Torque	23 OZ-IN.	55.6 OZ-IN.	76.5 OZ-IN.
Stall Current	3.9 A	9.5 A	11.5 A
Peak Output Power	22.5 W	53.4W	67.8 W

Motor Drawing

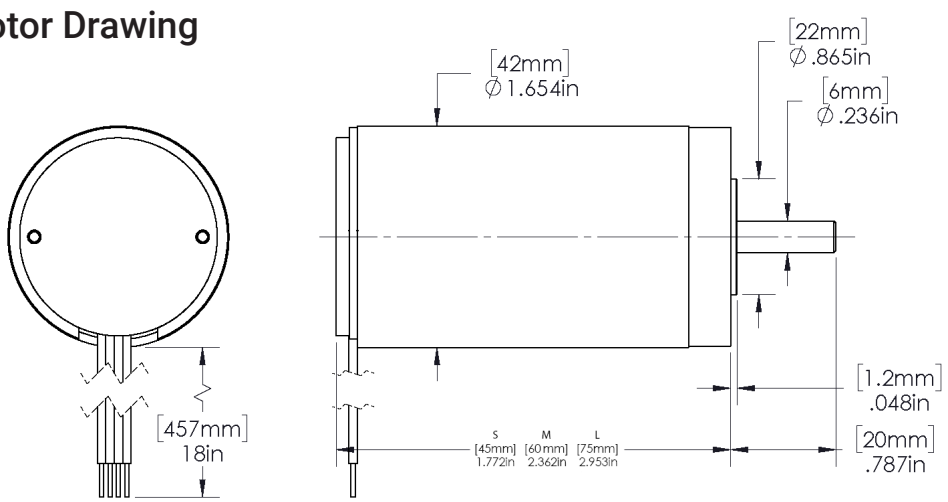

Pinouts and Schematics

BLDC connections and Driver Schematics

MULTIPRODUCTS Company, Inc.

HALL EFFECT

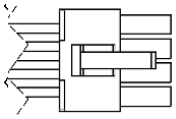

MOLEX 39-01-2080

Hall Effect Connector Pin Out		
Pin No.	Wire Color	Signification
1	Red	U Phase
2	White	V Phase
3	Black	W Phase
4	Green	GND
5	Orange	Vcc
6	Yellow	Hall U
7	Blue	Hall V
8	Purple	Hall W

Hall Effect Firing Sequence									
	Hall Effect Sensors			CCW Phases			CW Phases		
	HU	HV	HW	U	V	W	U	V	W
1	1	0	1	+	-	0	-	+	0
2	1	0	0	0	-	+	0	+	-
3	1	1	0	-	0	+	+	0	-
4	0	1	0	-	+	0	+	-	0
5	0	1	1	0	+	-	0	-	+
6	0	0	1	+	0	-	-	0	+

EZ DRIVE

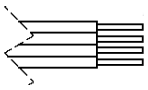

4-WIRE CONNECTION

Full Driver Connector Pin Out					
Pin No.	Wire Color	Symbol	I/O	Function	Connection
1	Red	VM	Input	Power Supply - POS	DC12V-24V +
2	Blue	Brake	Input	Brake Operates	Open or to Ground
3	Black	Ground		Power Supply - NEG	DC12V-24V -
4	Green	For/Rev	Input	Open: CCW Ground: CW	Open or to Ground
Warning: The positive and ground wire connection is not reversible; damage to motor will result.					

EZ DRIVE SCHEMATIC

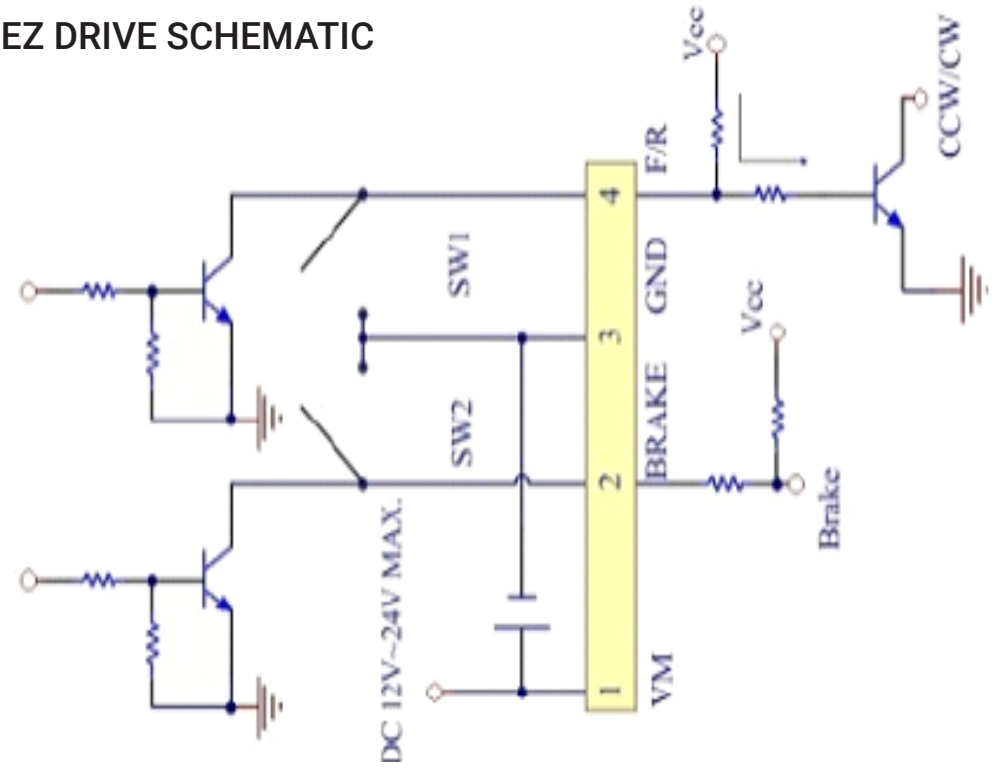

Pinouts and Schematics

BLDC connections and Driver Schematics

MULTIPRODUCTS Company, Inc.

DIGITAL DRIVE

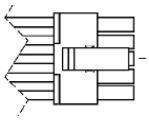

MOLEX 43025-1000

Digital Drive Connector Pin Out					
Pin No.	**Wire Color**	**Symbol**	**I/O**	**Function**	**Standard Condition**
10	White	Brake	Input	H: Brake engages L: Brake releases	H: ≥2.4V L: ≤0.4V
4	Gray	F/R	Input	H: CCW L: CW	H: ≥2.4V L: ≤0.4V
9	Purple	1.2 - 3.2V PWM	Input	Power supply positive for external speed setter	Pulse-width modulation Freq.: ≤5K Hz
3	Blue	2 PPR	Ouput	Make a full circle 2 pulse	Open collector
8	Green	VREF 4V	Ouput	Driver 4V output	Provide for high signal
2	Yellow	On/Off	Input	Motor rotates: 4V-5V Motor stops: ≤0.4V	Semiconductor element or a switch gear on/off
7	Orange	VR		Power supply positive for external speed setter	Variable resistor 5K-10K
1	Black	GND		Power supply GND	DC12V-24V max
6	Red	VM	Input	Power supply positive for drive	
Note: Select one of the PWM (Pin 9) or the VR (Pin 7) for speed control, connecting both simultaneously is not allowed					

DIGITAL DRIVE SCHEMATIC

