QUICK START GUIDE FOR DEMONSTRATION CIRCUIT 541A
36-72VIN TO 3.3V@40A AND 2.5V@10A, ISOLATED PUSH-PULL CONVERTER
LTC3723-1, LTC3901, LT3710 and LT1431

DESCRIPTION

Demonstration circuit 541A is an isolated synchronous push-pull converter featuring the LTC3723-1, LTC3901, LT1431 and LT3710. The design provides an isolated 3.3V at 40A and 2.5V at 10A from 48V (36V to 72V) input. Isolation voltage is 1500VDC. The circuit features low input capacitance, input undervoltage lockout and short circuit cycling protection to minimize thermal stress.

Design files for this circuit board are available. Call the LTC factory.

LTC is a trademark of Linear Technology Corporation

Table 1. Performance Summary (T_A = 25°C) V_{IN} =48V, full load, unless otherwise specified.

PARAMETER	CONDITION	VALUE
Minimum Input Voltage		36V
Maximum Input Voltage		72V
Output Voltage ($V_{OUT)\ 3.3V}$	V_{IN} = 36V to 72V, I_{OUT} = 0A to 40A	3.3V±2%
Output voltage (Vout) 2.5V	V_{IN} = 36V to 72V, I_{OUT} = 0A to 10A	2.5V±2%
Maximum Input Current	V_{IN} = 48V, 3.3Vat 40A, 2.5V at 10A	3.58A
Inrush Transient	V_{IN} = 72V	0.5 A^2s
Maximum Output Current for 3.3Voutput		40A
Maximum Output Current for 2.5Voutput		10A
Maximum Output Current for 3.3Voutput	With 2.5V output disabled	50A
Nominal Switching Frequency		180kHz
Output Short Circuit Period	Cycling, Auto-restart at 48V, 3.3V shorted	160ms
Dynamic Response	Peak Deviation with 10A to 30A load step	300mV
	Settling Time (to within 10mV of set point)	100µs
Efficiency	V_{IN} = 48V, I_{OUT} = 40A	90% Typical
Output Ripple 3.3V output	V_{IN} = 48V, I_{OUT} = 40A (100MHz BW)	60mV ripple, 150mV spikes
Output Ripple 2.5V output	V_{IN} = 48V, I_{OUT} = 10A (100MHz BW)	30mV ripple, 100mV spikes
Isolation Voltage		1500 VDC
Isolation Resistance		10 MΩ
Isolation Capacitance		2200 pF

OPERATING PRINCIPLES

CIRCUIT OVERVIEW

This push-pull converter operates at a nominal switching frequency of 180 kHz. Pulse width modulation control is done by U1, the LTC3723-1 controller. Galvanic isolation is met with transformer T1, T2 and ISO1. C30 is used as a local bypass to reduce common mode currents.

The primary side power path is comprised of T1, C3, C4, C5 Q8 and Q11 as the primary switches. Power is transferred during the on time of Q8 and Q11. MOSFETs Q12-Q15, Q23 and Q24 are the secondary synchronous rectifiers. L6, and C32-C34 form the secondary output filter. L5, C3, C4 and C5 form the primary input filter. C2 bypasses the input terminals. For large values of input inductance, an external 47uF aluminum electrolytic capacitor will damp the input filter and provide adequate stability. See Linear Technology Application Note AN19 for a discussion on input filter stability analysis.

An auxiliary winding on T1 provides bias voltage to the LTC3723-1. U1, the LTC3901, synchronizes with the LTC3723-1 via T2, a small pulse transformer, to provide gate drive to secondary switching MOSFETs.

During an output short circuit, the primary bias supply collapses. This results in the converter harmlessly cycling on and off, reducing power dissipation to a minimum. The cycling rate is nominally 6.25Hz with 48V input. When the short is removed, the converter returns to normal operation.

DC541A relies on the pcb area and 300 linear feet per minute of airflow to provide full load operation to 50°C ambient without the use of a heat sink. The maximum output power is primarily limited by component temperature rise. For example, for continued reliability, temperature should be kept below 110°C and the magnetics temperature rise should be limited to 60°C. Assuming 50°C ambient, this corresponds to 60°C surface mount component temperature rise. Figures 6 and 7 detail the temperature rise for the hottest components in the design with and without airflow. Based on these measurements and assuming a 50°C ambient, it is recommended that the output power be limited to 85W without airflow and 180W with 300 linear feet per minute of airflow.

When input voltage is applied, R29 provides trickle charge current to C14, resulting in a turn on delay of approximately 600ms at 36Vin.

Figure 5 shows efficiency.

SAFETY AND ISOLATION

The demo board is designed to meet the requirements of UL 60950, 3rd edition for basic insulation in secondary circuits. The transformer is designed to meet the basic insulation requirement with an isolation voltage of 1500VDC.

CONDUCTED EMI

Tests for conducted emissions were performed for the demo board. An external filter using a 47µF aluminum electrolytic capacitor, 1mH Common Mode inductor and 10µF film capacitor were used for the CISPR 22 class B limit. No tests for radiated RFI were performed. Proper grounding and layout technique must be observed to minimize radiation. See Figure 4 for EMI test setup. For EMI graphs see Figures 8 and 9.

RELIABILITY

Reliability prediction for the circuit has been calculated using the Telcordia (formerly Bellcore) SR-332. The black box technique was used. The calculation was made assuming a grounded, fixed, controlled environment and quality level II. A 50% electrical stress at 40°C yields an MTBF (mean time between failures) of 1.5 million hours.

QUICK START PROCEDURE

Demonstration circuit 541A is easy to set up to evaluate the performance of the LTC3732-1, LTC3901, LT1431 and LTC3710. Refer to Figure 1 for proper measurement equipment setup and follow the procedure below:

NOTE: When measuring the input or output voltage ripple, care must be taken to avoid a long ground lead on the oscilloscope probe. Measure the input or output voltage ripple by touching the probe tip directly across the Vin or Vout and GND terminals. See Figure 2 for proper scope probe technique.

1. For normal operation, a minimum of 36V must be applied at the input. Input voltages lower than 36V will keep the converter from turning on due to the undervoltage lockout feature in the LT3723-1.
2. Connect a 36-72V power supply, a 47uF 100V capacitor and meters to the Vin pins, as shown in Figure 1. Observe proper polarity.
3. Connect a 0-40A load and meters to the 3.3V Vout pins and a 0-10A load on the 2.5V Vout pins, as shown in Figure 1.
4. After all connections are made, turn on the input power and verify the output voltage, regulation, ripple voltage, efficiency and other parameters.

   NOTE: If there is no output, temporarily disconnect the load to make sure that the load is not set too high.

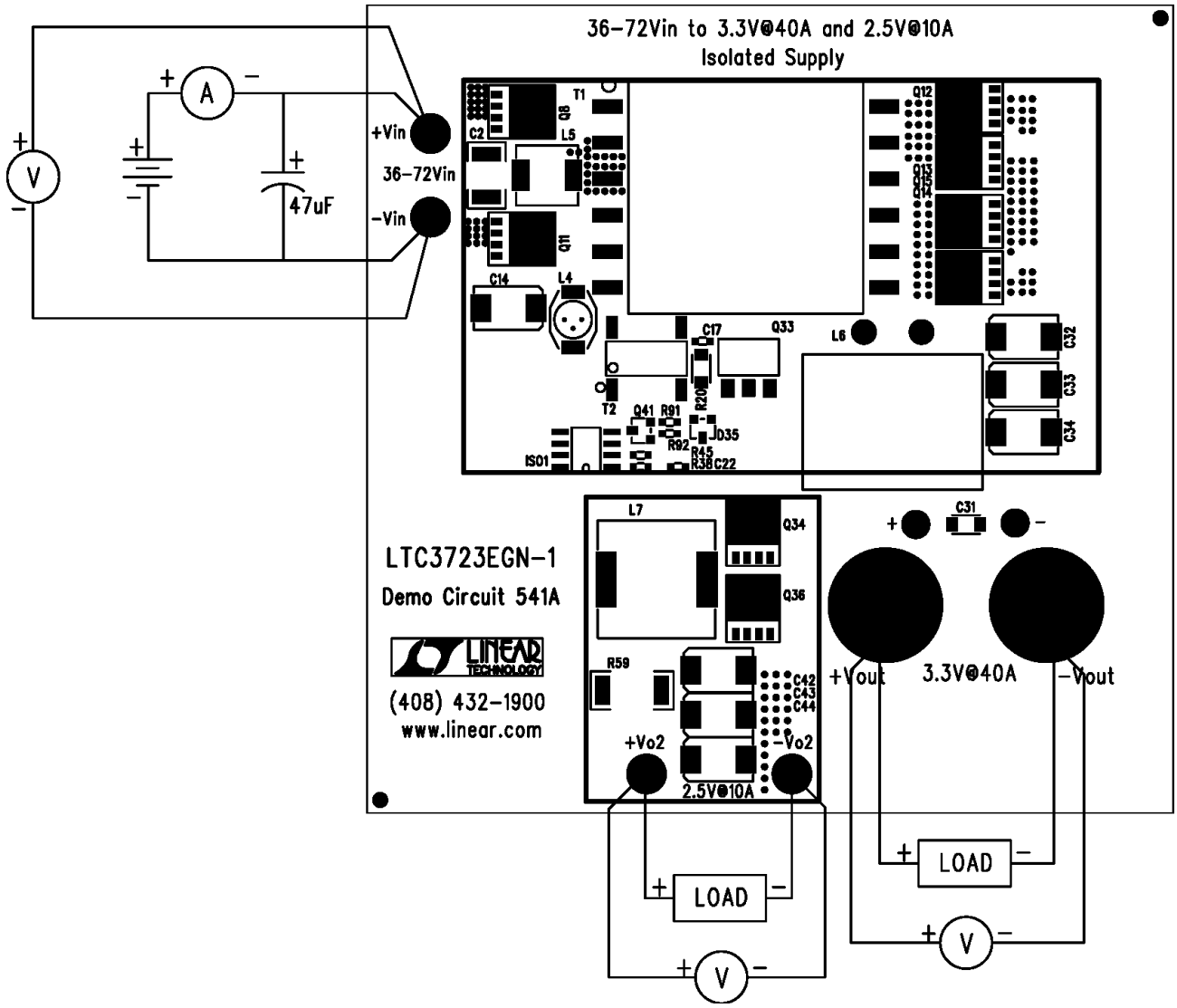

Figure 1. Proper measuring equipment setup

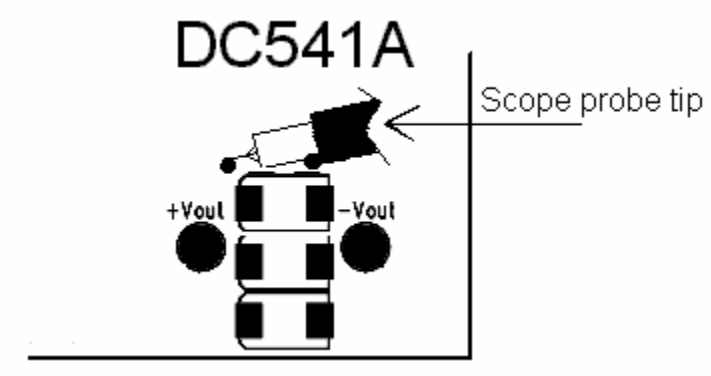

Figure 2. Measuring Output Ripple

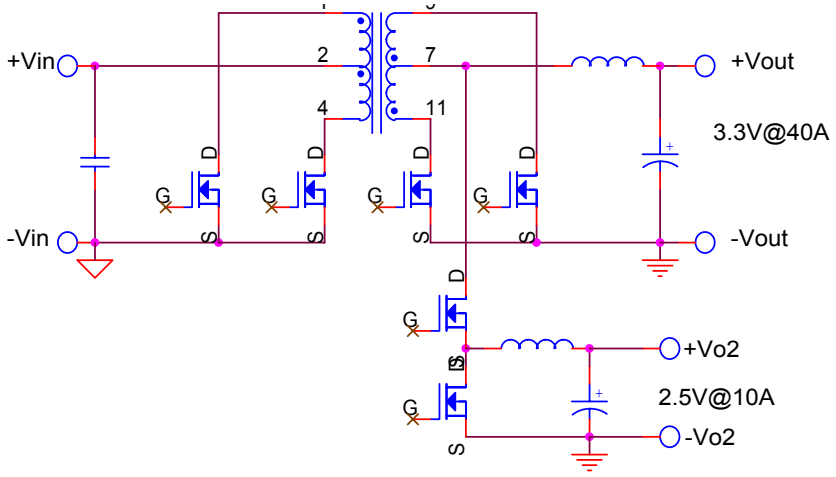

Figure 3. Basic synchronous push-pull converter

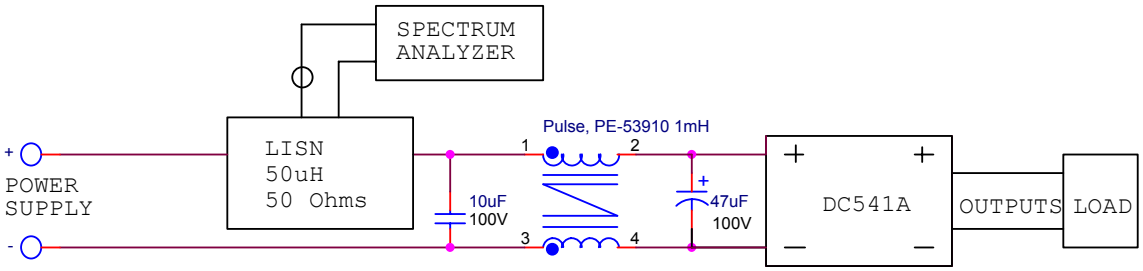

Figure 4. EMI Setup

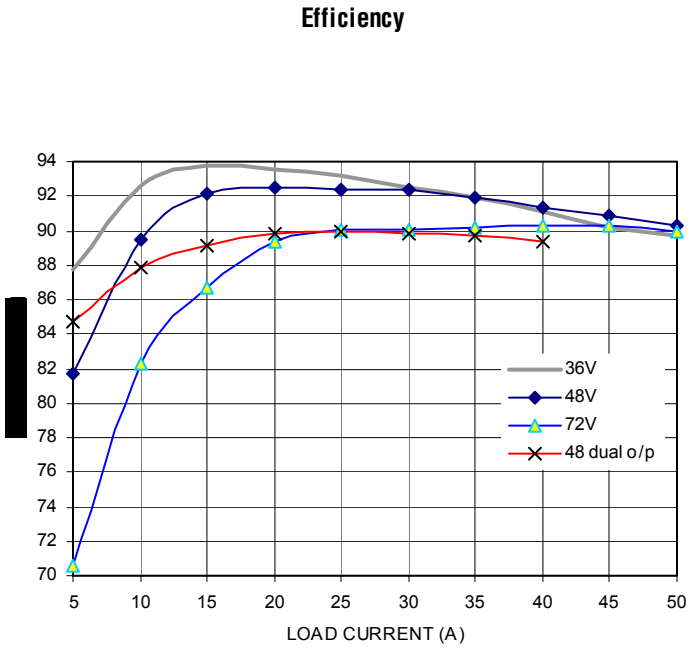

Figure 5. Typical Efficiency. 36V, 48V and 72V curves show efficiency with only the 3.3V in operation. 48V dual O/P curve shows the 3.3V efficiency from 5A-40A with the 2.5V loaded at 10A throughout.

Maximum load recommended without airflow to keep hottest component below 60°C rise				
Conditions	T1	Q8	Q12	Q34
36Vin, No air, 3.3V at 27A, 2.5V at 9A	60°C	60°C	56°C	57°C
48Vin, No air, 3.3V at 27A, 2.5V at 9A	60°C	55°C	57°C	59°C
72Vin, No air, 3.3V at 20A, 2.5V at 9A	59°C	54°C	58°C	61°C
Minimum airflow recommended to keep hottest component below 60°C rise				
Conditions	T1	Q8	Q12	Q34
36Vin, Air=300LFM, with airflow, 3.3V at 40A, 2.5V at 10A	56°C	61°C	56°C	52°C
48Vin, Air=300LFM, with airflow, 3.3V at 40A, 2.5V at 10A	60°C	60°C	54°C	49°C
72Vin, Air=300LFM, with airflow, 3.3V at 40A, 2.5V at 10A	59°C	54°C	54°C	56°C

Figure 6. Temperature of T1, Q8, Q12 and Q34 shown with and without airflow and with both outputs running.

Maximum load recommended without airflow to keep hottest component below 60°C rise			
Conditions	T1	Q8	Q12
36Vin, no air, 3.3V at 34.5A, 2.5V disconnected	59°C	59°C	57°C
48Vin, no air, 3.3V at 34.5A, 2.5V disconnected	60°C	55°C	55°C
72Vin, no air, 3.3V at 25A, 2.5V disconnected	56°C	47°C	60°C
Minimum airflow recommended to keep hottest component below 60°C rise			
Conditions	T1	Q8	Q12
36V, LFM=500LFM, 3.3V at 50A	48°C	61°C	50°C
48V, LFM=400LFM, 3.3V at 50A	55°C	57°C	55°C
72V, LFM=400LFM, 3.3V at 50A	53°C	50°C	53°C

Figure 7. Temperature of T1, Q8, Q12 and Q34 shown with and without airflow and with both outputs running.

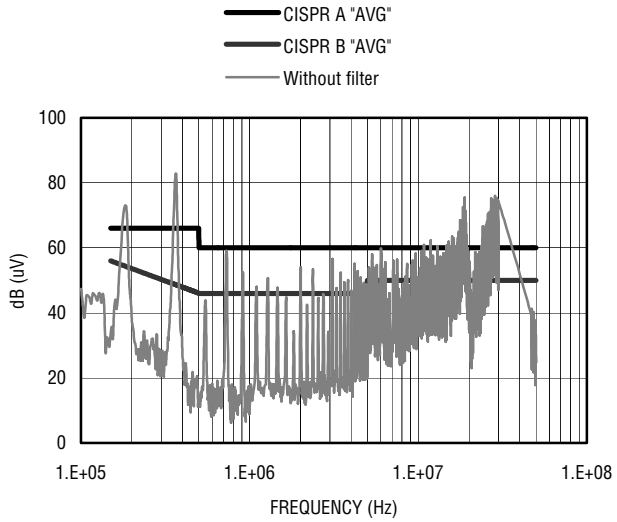

Figure 8. Conducted Emissions at V_{IN} = 48V, 3.3V@40A, and 2.5V@10A without input Filter

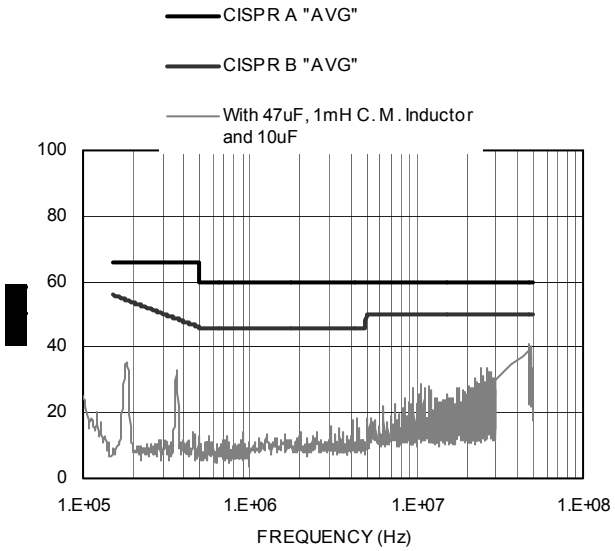

Figure 9. Conducted Emissions at V_{IN} = 48V, 3.3V@40A, and 2.5V@10A with External Filter.

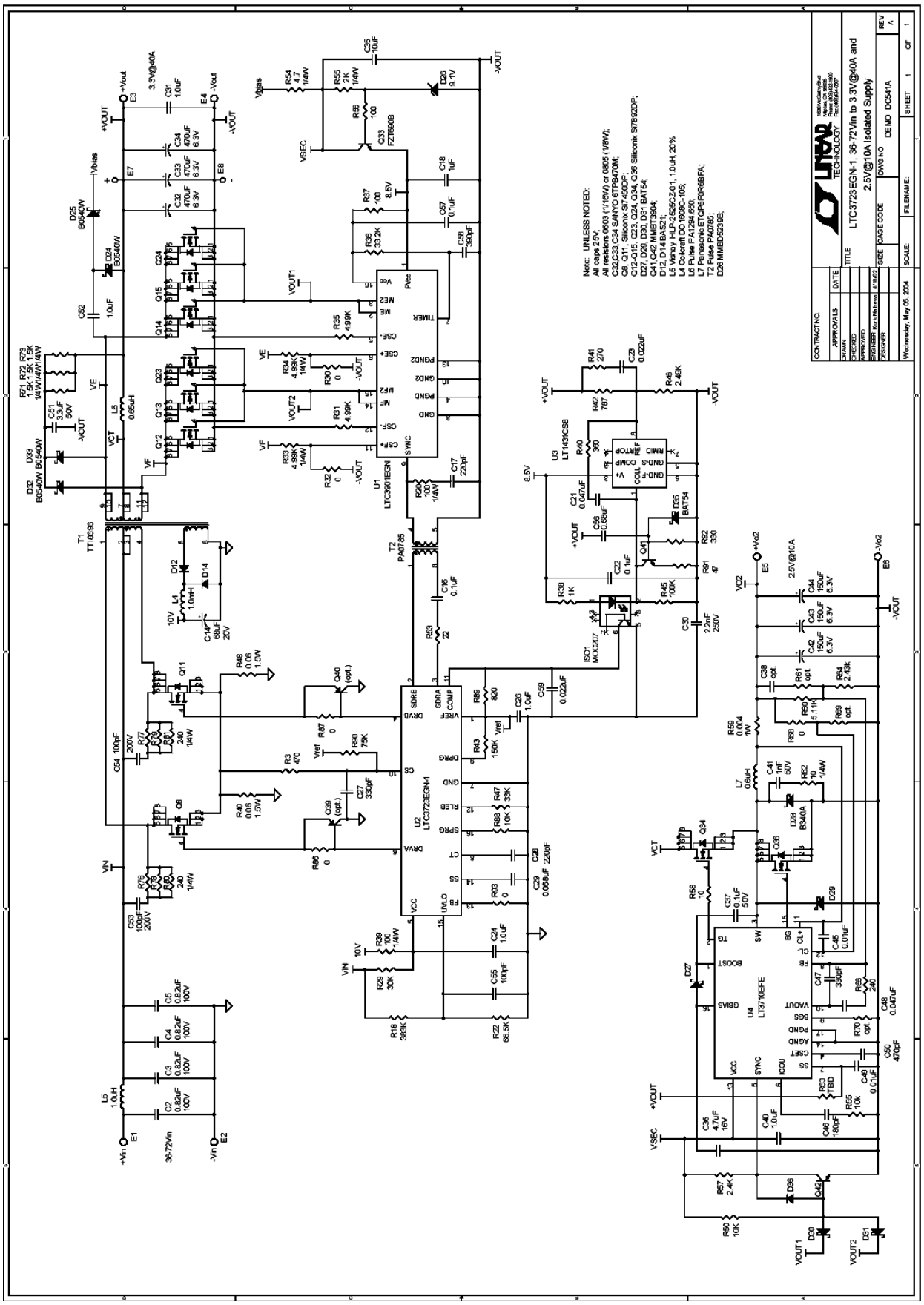
LTC3723EGN-1, 36-72Vin to 3.3V@40A and 2.5V@10A Isolated Supply
DEMO DC541A
Wednesday, May 05, 2004
Note: UNLESS NOTED:
All caps 25V;
All resistors 0603 (1/16W) or 0805 (1/8W);
C32,C33,C34 SANYO 6TPB470M;
Q8, Q11, Siliconix Si7450DP;
Q12-Q15, Q23, Q24, Q34, Q36 Siliconix Si7882DP;
D27, D29, D30, D31 BAT54;
Q41,Q42 MMBT3904;
D12, D14 BAS21;
L5 Vishay IHLP-2525CZ-01, 1.0uH, 20%
L4 Coilcraft DO1608C-105;
L6 Pulse PA1294.650;
L7 Panasonic ETQP6F0R6BFA;
T2 Pulse PA0785;
D26 MMBD5239B;
U1 LTC3901EGN
U2 LTC3723EGN-1
U3 LT1431CS8
U4 LT3710EFE
T1 TT18696
T2 PA0785
ISO1 MOC207
36-72Vin
3.3V@40A
2.5V@10A