# DEMO CIRCUIT 1695
# QUICK START GUIDE

## LOW QUIESCENT CURRENT, HIGH VOLTAGE STEP-DOWN CONVERTER

## DESCRIPTION

Demonstration circuit 1695 is a Low Quiescent Current, Synchronous Buck Converter featuring the LTC3891EFE. DC1695 converts a 4.5V-60V voltage source to 3.3V at 5.0A.

The main features of the board include an internal LDO for power gate driver from VIN or EXTVCC, RUN and PGOOD pins and a Mode selector that allows converter to run in CCM, Pulse Skipping or Burst Mode operation, selectable current limit. DC1695 supports also adjustable output voltage, Soft-Start and Tracking. Synchronization to an external clock is possible as well. The wide input voltage range of 4.5V to 60V is suitable for automotive or other battery fed application and Distributed DC Power Systems where low quiescent current is important.

The LTC3891EFE datasheet gives a complete description of this part, operation and application information. The datasheets must be read in conjunction with this quick start guide for demo circuit 1695.

The 60V avalanche rated MOSFETs, which are used on DC1695, can be operated at their rated voltage. However, if application derating requirements are stricter, MOSFETs with higher voltage rating can be used. Please note, MOSFETs with higher voltage ratings may affect the efficiency. If 60V MOSFETs are used, keep in mind that avalanche rating and testing is typically done with 30% over voltage margin (78V for 60V rated MOSFET). Please check with particular MOSFET manufacturer to ensure the avalanche voltage rating.

DC1695 supports following MOSFET packages: LFPAK, PowerPAK SO-8 and PowerPAK 1212-8. Subsequent logic level MOSFETs can be used with DC1695

| | |
|---|---|
| Si7850DP | Vishay |
| RJK0651DPB | Renesas |
| HAT2266H | Renesas |
| BSC100N06LS3 G | Infineon |
| Si7120DN | Vishay |

**Design files for this circuit board are available. Call the LTC factory.**

LT, LTC, LTM, LT are registered trademarks of Linear Technology Corporation.

| PARAMETER | CONDITIONS | VALUE | UNITS |
|---|---|---|---|
| Minimum Input Supply Voltage | | 4.5 | V |
| Maximum Input Supply Voltage | | 60 | V |
| Output Voltage Range | VIN = 4.5V to 60V, IOUT1 = 0A to 5A | 3.3±2% | V |
| Typical switching frequency | | 225 | kHz |
| Typical Output Ripple (VOUT, 3.3V) | $I_{LOAD}$ = 5.0A | 40 | mV |
| Efficiency Typical (VOUT, 3.3V) | | 92 | % |
| Supply Quiescent Current | Vin=24V; VOUT=3.3V, Io=0A, Burst mode | 50.8 | µA |
| Supply Shutdown Current | Vin=24V | 14.7 | µA |

## QUICK START PROCEDURE

Demonstration circuit 1695 is easy to set up to evaluate the performance of the LTC3891EFE. Refer to Figure 1 for proper measurement equipment setup and follow the procedure below:

**NOTE.** When measuring the input or output voltage ripple, care must be taken to avoid a long ground lead on the oscilloscope probe. Measure the input or output voltage ripple by touching the probe tip directly across the VIN or VOUT and GND terminals. See Figure 2 for proper scope probe technique.

**1.** Place jumper **JP1** in the **ON** position:

**2.** With power off, connect the input power supply to VIN and GND.

**3.** Turn on the power at the input. Check for the proper output voltages
VOUT1=3.234V to 3.366V,

**NOTE.** If there is no output, temporarily disconnect the load to make sure that the load is not set too high.

**4.** Once the proper output voltages are established, adjust the load within the operating range and observe the output voltage regulation, ripple voltage, efficiency and other parameters.

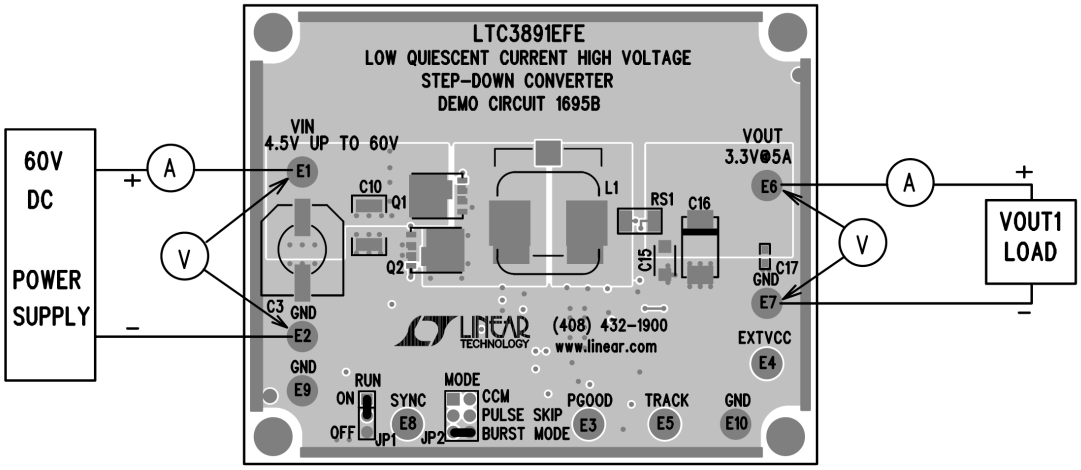


**Figure 1. Proper Measurement Equipment Setup**

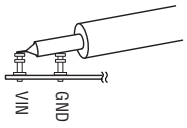


**Measuring Input or output Ripple**

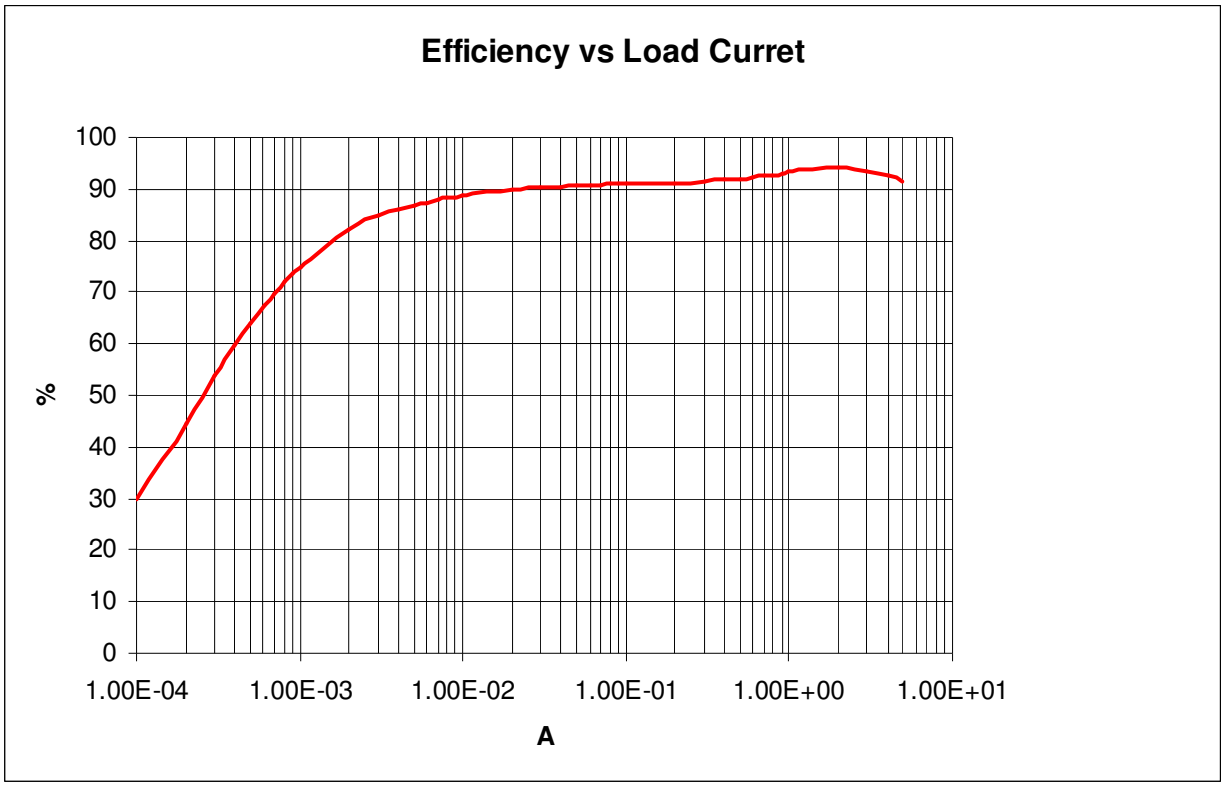


Figure 3. 3.3V Output, Efficiency vs. Load, Burst Mode, Vin 12V

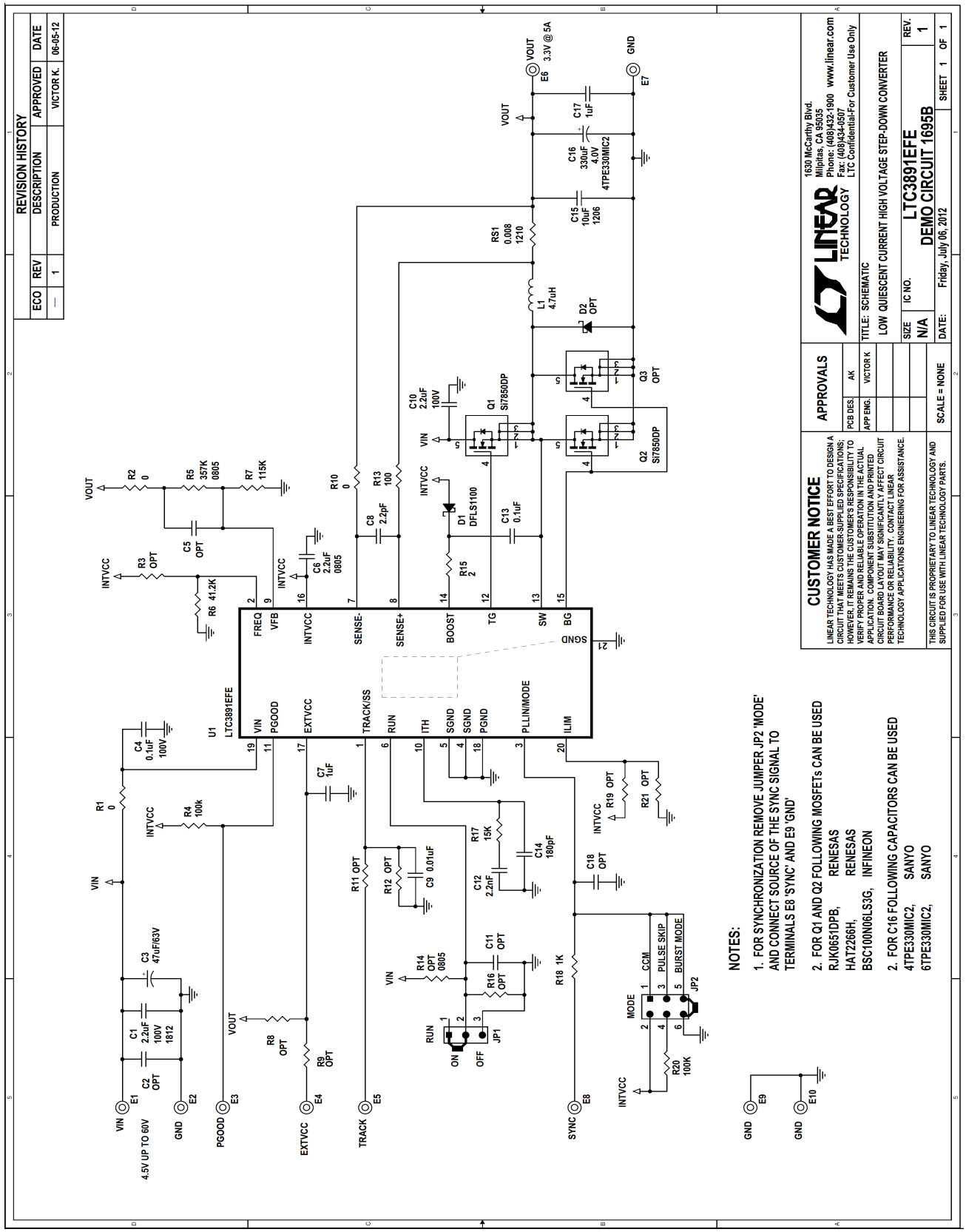
REVISION HISTORY
ECO | REV | DESCRIPTION | APPROVED | DATE
— | 1 | PRODUCTION | VICTOR K. | 06-05-12
CUSTOMER NOTICE
LINEAR TECHNOLOGY HAS MADE A BEST EFFORT TO DESIGN A CIRCUIT THAT MEETS CUSTOMER-SUPPLIED SPECIFICATIONS; HOWEVER, IT REMAINS THE CUSTOMER'S RESPONSIBILITY TO VERIFY PROPER AND RELIABLE OPERATION IN THE ACTUAL APPLICATION. COMPONENT SUBSTITUTION AND PRINTED CIRCUIT BOARD LAYOUT MAY SIGNIFICANTLY AFFECT CIRCUIT PERFORMANCE OR RELIABILITY. CONTACT LINEAR TECHNOLOGY APPLICATIONS ENGINEERING FOR ASSISTANCE.
APPROVALS
PCB DES. AK
APP ENG. VICTOR K
LINEAR TECHNOLOGY
1630 McCarthy Blvd. Milpitas, CA 95035 Phone: (408)432-1900 www.linear.com Fax: (408)434-0507 LTC Confidential-For Customer Use Only
TITLE: SCHEMATIC
LOW QUIESCENT CURRENT HIGH VOLTAGE STEP-DOWN CONVERTER
SIZE N/A
IC NO. LTC3891EFE
DEMO CIRCUIT 1695B
REV. 1
DATE: Friday, July 06, 2012
SHEET 1 OF 1
SCALE = NONE
THIS CIRCUIT IS PROPRIETARY TO LINEAR TECHNOLOGY AND SUPPLIED FOR USE WITH LINEAR TECHNOLOGY PARTS.
NOTES:
1. FOR SYNCHRONIZATION REMOVE JUMPER JP2 'MODE' AND CONNECT SOURCE OF THE SYNC SIGNAL TO TERMINALS E8 'SYNC' AND E9 'GND'
2. FOR Q1 AND Q2 FOLLOWING MOSFETs CAN BE USED
RJK0651DPB, RENESAS
HAT2266H, RENESAS
BSC100N06LS3G, INFINEON
2. FOR C16 FOLLOWING CAPACITORS CAN BE USED
4TPE330MIC2, SANYO
6TPE330MIC2, SANYO
U1 LTC3891EFE
VIN PGOOD EXTVCC TRACK/SS RUN ITH SGND SGND PGND PLLIN/MODE ILIM
FREQ VFB INTVCC SENSE- SENSE+ BOOST TG SW BG
Q1 SI7850DP
Q2 SI7850DP
Q3 OPT
D1 DFLS1100
D2 OPT
L1 4.7uH
RS1 0.008 1210
VIN 4.5V UP TO 60V
VOUT 3.3V @ 5A
GND
PGOOD
EXTVCC
TRACK
SYNC
RUN
ON
OFF
MODE
CCM
PULSE SKIP
BURST MODE