DEMO CIRCUIT 1578A
QUICK START GUIDE

LT3695-3.3 and LT3695-5
1A Fault Tolerant Micropower Step-down Switching Regulator

DESCRIPTION

Demonstration circuit 1578A-A and 1578A-B are micropower monolithic step-down DC/DC switching regulators featuring LT3695-3.3 and LT3695-5 respectively. The demo boards have fixed output voltages of 3.3V and 5V. The wide input range of the LT3695 allows a variety of input sources. The typical sources are automotive batteries, wall adaptors and industrial supplies. The switching frequency can be programmed either via oscillator resistor or external clock. The modes of operation (Burst Mode or synchronization) are jumper selectable. The Burst Mode operation increases the efficiency at light loads.

The LT3695 family tolerates adjacent pin shorts or an open pin without raising the output voltage above its programmed value. NC pins on the LT3695 family must be left floating. The current mode control scheme creates fast transient response and good loop stability. The gate drive of the internal switch is boosted to a voltage that is higher than the Vin to ensure saturation of the switch. The LT3695 family's integrated boost diode reduces the parts count. The RUN/SS pin can be used to set the part in micropower shutdown mode, reducing the supply current to less than 1uA. The RUN/SS pin can also be used to program soft start. In this mode, the RUN/SS pin is driven through an external RC filter to create a voltage ramp on this pin. The soft start function reduces the input current surge during start-up. The LT3695 family can run in low ripple burst mode or pulse skipping mode. JP2 selects the mode. When in burst mode, the no load supply current is reduced to 80uA for the demo circuit 1578A-A and 100uA for the demo circuit 1578A-B.

The LT3695 family datasheet gives a complete description of the part, operation and application information. The datasheet must be read in conjunction with this quick start guide for demo circuit 1578A-A and 1578A-B.

Design files for this circuit board are available. Call the LTC factory.

LTM, LTC, LT and µModule are registered trademarks of Linear Technology Corporation. All other trademarks are the property of their respective owners.

Performance Summary for Step-down Switching Regulator ($T_A = 25^oC$)

PARAMETER FOR BUCK REGULATOR	CONDITION	VALUE
Minimum Input Voltage	Demo Circuit 1578A-A Demo Circuit 1578A-B	4.5V 6.9V
Maximum Input Voltage	Operating Transient	36V 60V
Output Voltage V_{OUT}	Demo Circuit 1578A-A Demo Circuit 1578A-B	3.3V +/- 1.5% 5V +/- 1.5%
Maximum Output Current		1A
Typical Efficiency	Demo Circuit 1578A-A; V_{IN} = 12V; I_{OUT} = 1A Demo Circuit 1578A-B; V_{IN} = 12V; I_{OUT} = 1A	85% 88%
Typical Switching Frequency		800kHz

QUICK START PROCEDURE

Demonstration circuit 1578A-A and 1578A-B are easy to set up to evaluate the performance of the LT3695-3.3 and LT3695-5. Refer to Figure 1 for proper measurement equipment setup and follow the procedure below:

NOTE. When measuring the input or output voltage ripple, care must be taken to avoid a long ground lead on the oscilloscope probe. Measure the input or output voltage ripple by touching the probe tip directly across the V_{IN} or V_{OUT} and GND terminals. See Figure 2 for proper scope probe technique.

1. Place JP1 = ON; JP2 = Burst Mode.
2. With power off, connect the input power supply to V_{IN} and GND. Connect load to V_{OUT} and GND
3. Turn on the power at the input.
4. Check for the proper output voltage.

   NOTE. If there is no output, temporarily disconnect the load to make sure that the load is not set too high.
5. Once the proper output voltage is established, adjust the load within the operating range and observe the output voltage regulation, ripple voltage, efficiency and other parameters.
6. An external clock can be added to the SYNC pin when SYNC function is used. See synchronization section in the datasheet for details.

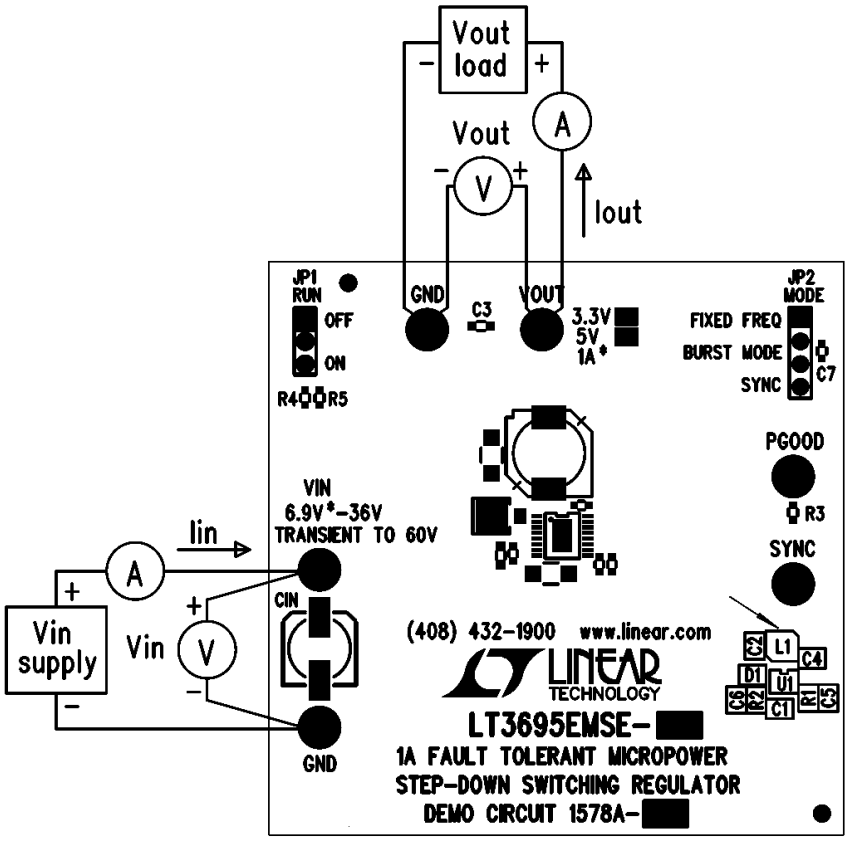

Figure 1. Proper Measurement Equipment Setup

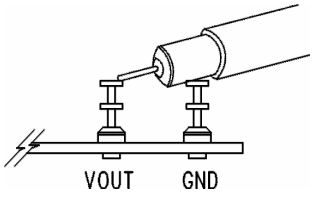

Figure 2. Measuring Input or Output Ripple

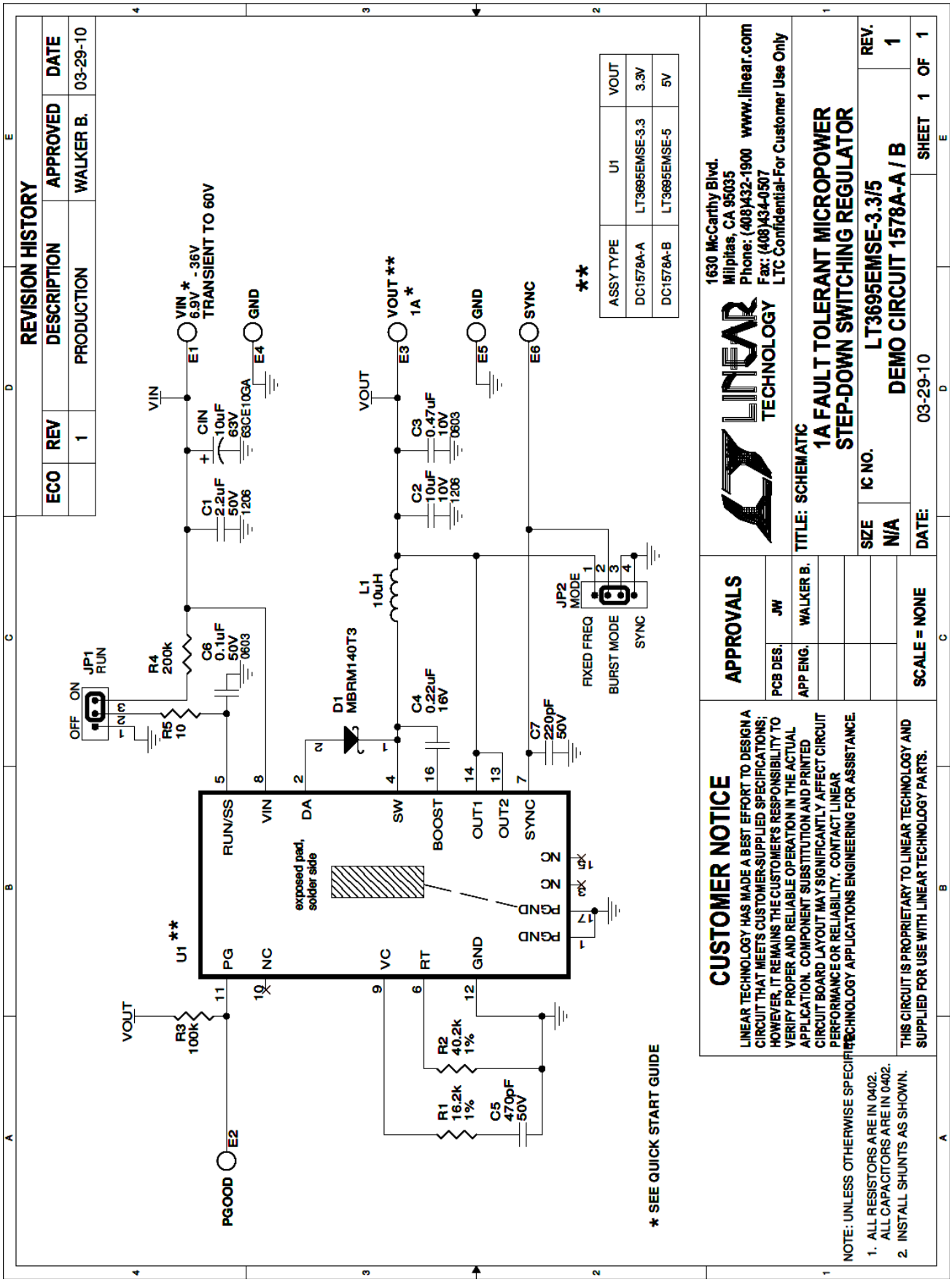
REVISION HISTORY
ECO
REV
DESCRIPTION
APPROVED
DATE
1
PRODUCTION
WALKER B.
03-29-10
VIN 6.9V * - 36V TRANSIENT TO 60V
VOUT ** 1A *
GND
SYNC
VIN
VOUT
CIN 10uF 63V 63CE10GA
C1 2.2uF 50V 1206
C2 10uF 10V 1206
C3 0.47uF 10V 0603
L1 10uH
R4 200k
C6 0.1uF 50V 0603
R5 10
JP1 RUN
OFF ON
D1 MBRM140T3
C4 0.22uF 16V
C7 220pF 50V
JP2 MODE
FIXED FREQ
BURST MODE
SYNC
U1 **
RUN/SS
VIN
DA
SW
BOOST
OUT1
OUT2
SYNC
exposed pad, solder side
PG
NC
VC
RT
GND
PGND
R3 100k
R2 40.2k 1%
R1 16.2k 1%
C5 470pF 50V
PGOOD
E1
E2
E3
E4
E5
E6
**
ASSY TYPE
U1
VOUT
DC1578A-A
LT3695EMSE-3.3
3.3V
DC1578A-B
LT3695EMSE-5
5V
* SEE QUICK START GUIDE
CUSTOMER NOTICE
LINEAR TECHNOLOGY HAS MADE A BEST EFFORT TO DESIGN A CIRCUIT THAT MEETS CUSTOMER-SUPPLIED SPECIFICATIONS; HOWEVER, IT REMAINS THE CUSTOMER'S RESPONSIBILITY TO VERIFY PROPER AND RELIABLE OPERATION IN THE ACTUAL APPLICATION. COMPONENT SUBSTITUTION AND PRINTED CIRCUIT BOARD LAYOUT MAY SIGNIFICANTLY AFFECT CIRCUIT PERFORMANCE OR RELIABILITY. CONTACT LINEAR TECHNOLOGY APPLICATIONS ENGINEERING FOR ASSISTANCE.
THIS CIRCUIT IS PROPRIETARY TO LINEAR TECHNOLOGY AND SUPPLIED FOR USE WITH LINEAR TECHNOLOGY PARTS.
NOTE: UNLESS OTHERWISE SPECIFIED:
1. ALL RESISTORS ARE IN 0402. ALL CAPACITORS ARE IN 0402.
2. INSTALL SHUNTS AS SHOWN.
APPROVALS
PCB DES. JW
APP ENG. WALKER B.
SCALE = NONE
LINEAR TECHNOLOGY
1630 McCarthy Blvd.
Milpitas, CA 95035
Phone: (408)432-1900 www.linear.com
Fax: (408)434-0507
LTC Confidential-For Customer Use Only
TITLE: SCHEMATIC
1A FAULT TOLERANT MICROPOWER STEP-DOWN SWITCHING REGULATOR
SIZE N/A
IC NO. LT3695EMSE-3.3/5
DEMO CIRCUIT 1578A-A / B
REV. 1
DATE: 03-29-10
SHEET 1 OF 1