LT5581

DESCRIPTION

Demonstration Circuit 1314A is a Mean-Squared Power Detector featuring the LT®5581 IC.

The LT5581 is a wide dynamic range Mean Squared RF Power Detector, operational from 10MHz to 6GHz. The input dynamic range at 6GHz, with ±1dB nonlinearity, is 40dB (from –34dBm to +6dBm, single-ended 50Ω input). The detector output voltage slope is normally 31mV/dB, and the typical output variation over temperature is ±0.5dB at 880MHz.

The 1314A Demo Circuit is optimized for wide frequency range of 10MHz to 2.2GHz. However, input match can be optimized up to 6GHz with simple external matching.

Design files for this demo board are available. Call the LTC factory.

LTC is a trademark of Linear Technology Corporation

Typical Performance Summary (V_{CC} = 3.3V, ENBL = 3.3V, T_A = 25°C, unless otherwise noted. Test circuit shown in Figure 1.)

PARAMETER	CONDITION	VALUE
Supply Voltage		2.7V to 5.25V
Supply Current		1.4mA
Shutdown Current	ENBL = Low	0.2µA
ENBL Voltage	Low, Chip Disabled HIGH, Chip Enabled	0.3V max 2V min
ENBL Input Current	V_{ENBL} = 0V V_{ENBL} = 5V	0µA 20µA
Output Start Voltage	No Input Signal Present	0.2V
Rise Time	0.2V to 1.6V, 10% to 90%, C1 = 22nF, F_{RF} = 2140 MHz	1µs
Fall Time	1.6V to 0.2V, 90% to 10%, C1 = 22nF, F_{RF} = 2140 MHz	8µs
Input Frequency Range	Optimized for DC1314A demo board	10MHz to 6GHz
f = 450MHz		
Linear Dynamic Range	±1 dB linearity error	40 dB
Slope		31mV/dB
Logarithmic Intercept		-42dBm
Output Variation vs Temperature	P_{IN} = -34 to +6dBm	±1 dB
Deviation from CW Response	12 dB peak-to-average ratio (4 carrier WCDMA)	±0.5 dB
f = 5800MHz		
Linear Dynamic Range	±1 dB linearity error	31dB
Slope		31mV/dB
Logarithmic Intercept		-33dBm
Output Variation vs Temperature	P_{IN} = -25 to +6dBm	±1 dB
Deviation from CW Response	WiMAX OFDM Burst; P_{IN} = -25 to +6dBm	±0.2dB

QUICK START PROCEDURE

Demonstration Circuit 1314A is easy to set up to evaluate the performance of the LT5581. Refer to Figure 1 for measurement equipment setup and follow the procedure below:

Connect voltmeter's negative (-) lead to demo board GND test point (E4).

Connect voltmeter's positive (+) lead to the demo board OUTPUT test point (J2).

Connect DC power supply's negative (-) output to demo board GND test point (E3 and E4).

Connect DC power supply's positive (+) output (2.7V to 5.25V) to demo board V_{CC} test point (E1 and E2).

Do not exceed 5.5V, the absolute maximum supply voltage.

Connect signal generator's output to demo board INPUT port (SMA connector J1) via coaxial cable. A 3dB attenuator may be inserted to improve input match.

Using a jumper cable, connect demo board V_{CC} test point (E1) to ENBL test point (E2). Now the detector is enabled (on) and is ready for measurement.

NOTES:

1. **The voltage on the EN test point must never exceed V_{CC} + 0.3V.**
2. **For digitally modulated signals, an oscilloscope can be used to observe the AC components of the output.**
3. **Pins 4, 5 and 6 are internally connected to ground. In the customer designs, the users have the choice to leave them as no connect as in the demo board, or connect them to ground.**

Pin 8, C_{SQ} is the Optional Low Frequency Range Extension Capacitor. Use this pin for frequencies below 250MHz. Connect 0.01uF from Pin 8 to ground for 10MHz operation.

Apply RF input signal and measure OUTPUT DC voltages.

Do not exceed +15dBm, the absolute maximum RF input power.

DEMO BOARD MODIFICATIONS:

Modifications at RF input port for other frequency ranges:

FREQUENCY RANGE	RF_{IN} MATCH	
	L1	C1
1GHz to 2.2GHz	2.2nH	1.5pF
2GHz to 2.6GHz	1.2nH	1.5pF
2.6GHz to 3.4GHz	0	1pF
3.8GHz to 5.5GHz	0	0.5pF
4.6GHz to 6GHz	0	0

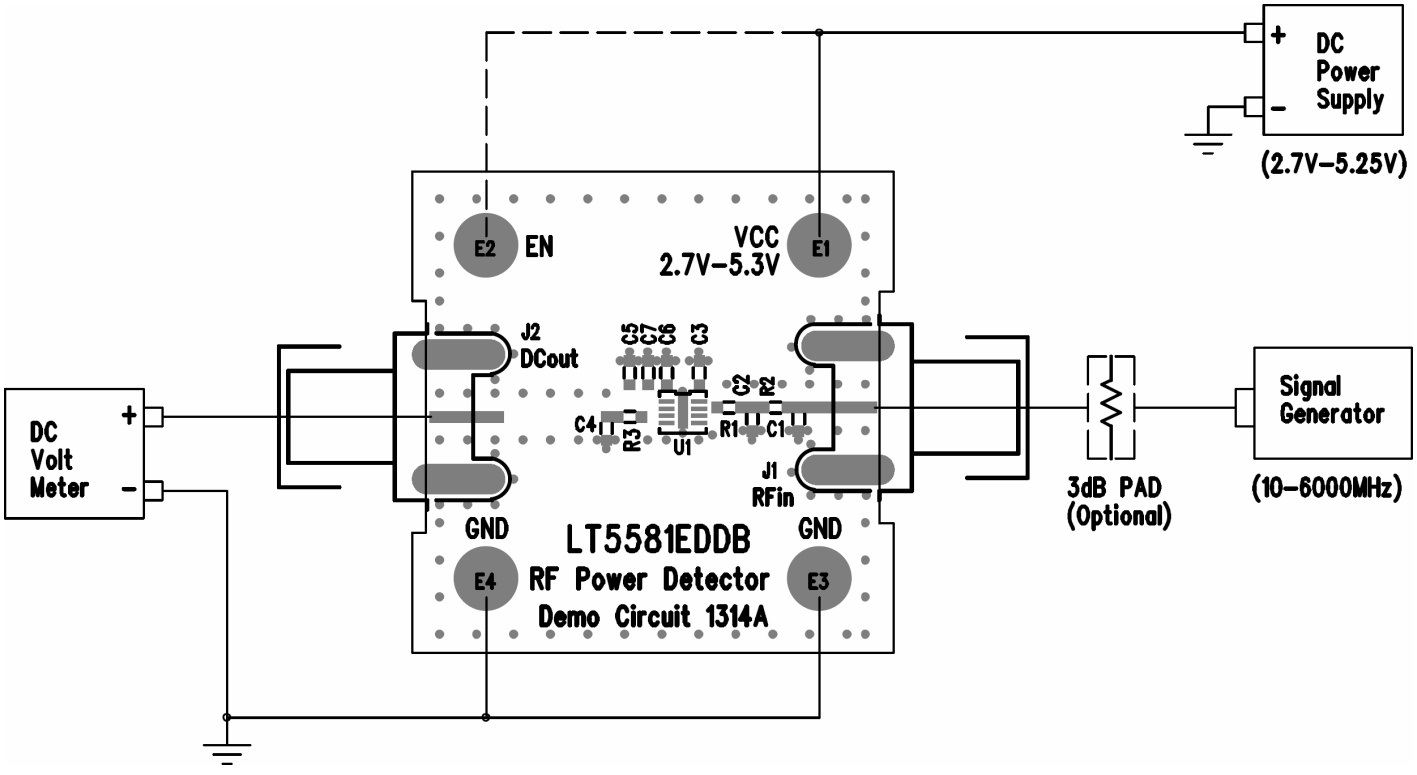

Figure 1. Proper Measurement Equipment Setup

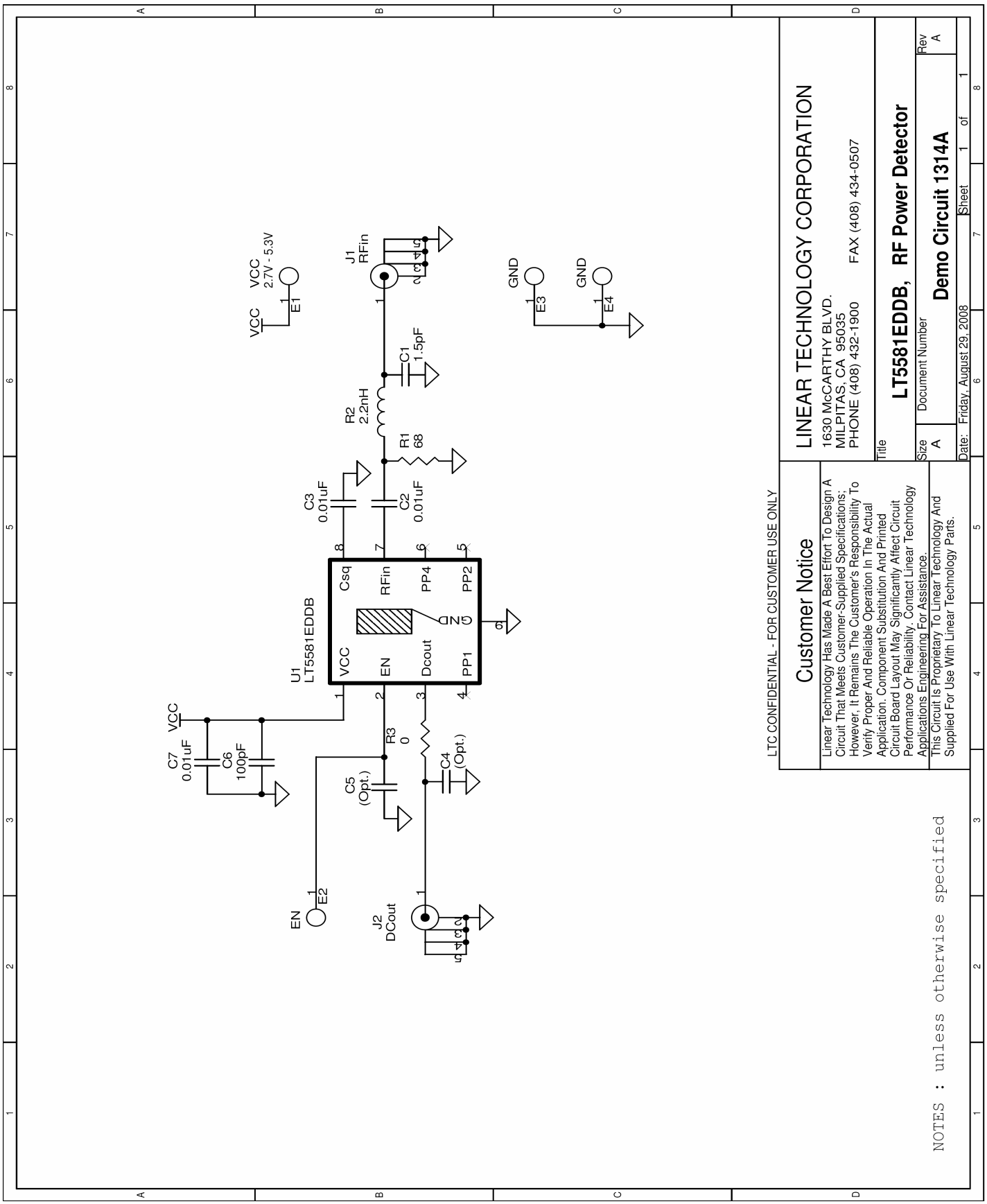
VCC
2.7V - 5.3V
E1
J1
RFin
GND
E3
GND
E4
C1
1.5pF
R2
2.2nH
R1
68
C3
0.01uF
C2
0.01uF
U1
LT5581EDDB
VCC
EN
Dcout
GND
Csq
RFin
PP4
PP2
PP1
C7
0.01uF
C6
100pF
R3
0
C5
(Opt.)
C4
(Opt.)
EN
E2
J2
DCout
LTC CONFIDENTIAL - FOR CUSTOMER USE ONLY
Customer Notice
Linear Technology Has Made A Best Effort To Design A Circuit That Meets Customer-Supplied Specifications; However, It Remains The Customer's Responsibility To Verify Proper And Reliable Operation In The Actual Application. Component Substitution And Printed Circuit Board Layout May Significantly Affect Circuit Performance Or Reliability. Contact Linear Technology Applications Engineering For Assistance.
This Circuit Is Proprietary To Linear Technology And Supplied For Use With Linear Technology Parts.
LINEAR TECHNOLOGY CORPORATION
1630 McCARTHY BLVD.
MILPITAS, CA 95035
PHONE (408) 432-1900
FAX (408) 434-0507
Title
LT5581EDDB, RF Power Detector
Size
A
Document Number
Demo Circuit 1314A
Rev
A
Date: Friday, August 29, 2008
Sheet 1 of 1
NOTES : unless otherwise specified