DESCRIPTION

Demonstration circuit 1242A includes a high efficiency synchronous boost converter, a low dropout linear regulator and a low battery detector. With a light load, the boost converter can startup with an input voltage as low as 680mV and once started, the input can go as low as 500mV while maintaining a regulated output voltage. With a 50mA load, the linear regulator features a dropout voltage of less than 100mV.

Separate input terminals are provided for the boost and linear regulator, and a jumper that allows the linear regulator to be powered from any one of three different sources.

Terminals and jumpers for shutting down or sequencing each regulators output separately and individual Power-Good outputs are included. Jumpers are also provided for selecting a total of six output voltages, three low battery voltages and a jumper to select BURST or PWM operation. The 3X3 mm QFN thermally enhanced package with a 2.2MHz switching frequency combined with the LDO regulator provide a very tiny multi output solution. The LTC3537 boost converter also features output disconnect and the input voltage can be greater or less than the output voltage.

This demonstration circuit allows the user to quickly evaluate the LTC3537 performance. Jumpers make selecting different output voltages and low battery thresholds simple while terminals on the board allow easy hookup to input supplies and output loads.

Design files for this circuit board are available. Call the LTC factory.

LTC and Burst Mode are trademarks of Linear Technology Corporation

Table 1. Typical Specifications (25°C)

	Conditions	Limits
Input Voltage Range V_{IN}		0.68V to 5.5V
Boost 1.8V V_{OUT}	V_{IN} = 1V, I_{OUT} = 100mA	1.8V ± 3.5%
Boost 3.3V V_{OUT}	V_{IN} = 1.5V, I_{OUT} = 200mA	3.3V ± 3.5%
Boost 5V V_{OUT}	V_{IN} = 1.5V, I_{OUT} = 200mA	5.0V ± 3.5%
Output Ripple Voltage (burst mode)	V_{IN} = 1.5V, V_{OUT} = 3.3V I_{OUT} = 15mA	30mV p-p
Output Ripple Voltage (fixed frequency)	V_{IN} = 1.5V, V_{OUT} = 3.3V I_{OUT} = 200mA	10mV p-p
Boost Efficiency	V_{IN} = 1.8V, V_{OUT} = 3.3V I_{OUT} = 100mA	88%
LDO Regulator 1.5V V_{OUT}	V_{IN} = 5V, I_{OUT} = 50mA	1.5V ± 2.5%
LDO Regulator 3.0V V_{OUT}	V_{IN} = 5V, I_{OUT} = 50mA	3.0V ± 2.5%
LDO Regulator 3.3V V_{OUT}	V_{IN} = 5V, I_{OUT} = 50mA	3.3V ± 2.5%
LDO Regulator Drop Out Voltage	V_{OUT} = 3.3V, I_{OUT} = 50mA, V_{OUT} drops 10%	100mV
Low Battery Threshold Voltage (dropping) 0.8V		800mV ± 5%
Low Battery Threshold Voltage (dropping) 1.7V		1.7V ± 5%
Low Battery Threshold Voltage (dropping) 3.0V		3V ± 5%

Figure 1. Demonstration Circuit Test Setup

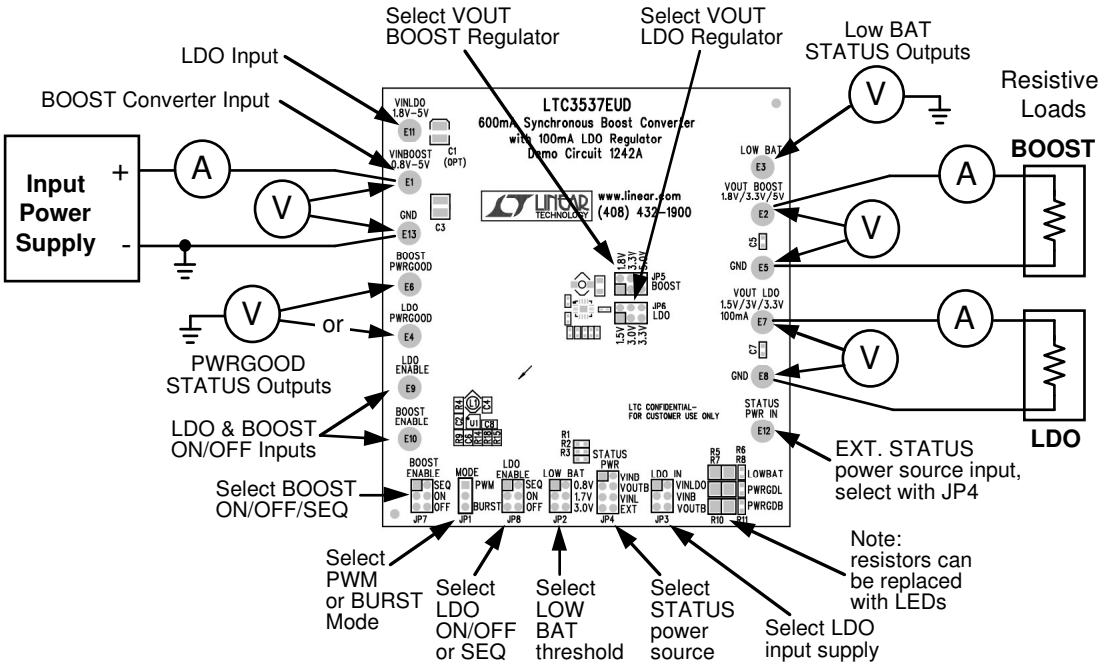

QUICK START PROCEDURE

The LTC3537 circuit can be evaluated using the setup shown in Figure 1. Most of the features can be verified simply by placing jumpers in various locations. It is recommended that the LTC3537 data sheet be nearby for a more complete explanation of the various features and specifications.

Using jumpers JP5 and JP6, select the desired output voltages (with no jumpers installed, the output voltages are set for the highest voltage). Enable each regulator by placing jumpers JP7 and JP8 in the ON position and place the “LDO IN” jumper (JP3) to the “VINB” (center) position which parallels the LDO and BOOST supply inputs. Set the “STATUS PWR” jumper (JP4) to the “VOUTB position, which connects the open-drain power good outputs and the low battery output pull-up resistors to the output of the boost regulator. JP4 also allows an external voltage applied to the STATUS PWR IN terminal to be used for the pull-up resistors.

Connect voltmeters and ammeters as shown in the Figure 1 test setup. Connect a power supply to the VINBOOST and GND terminals and a suitable load resistor between VOUT BOOST and GND. Avoid excessive wire lengths between the input power supply and the demonstration board. Wire lengths greater than 18 inches may require additional capacitance near the input terminals.

With a light load (1k resistor) at the output, begin increasing the input power supply voltage. At approximately 700mV, the output will rise to the selected regulated voltage. When the output voltage exceeds the input voltage by at least 240mV, the converter powers itself from the output instead of the input. This feature allows the input voltage to drop as low as 500mV (at light loads) and still maintain a

regulated output voltage. A data sheet curve shows the minimum resistive load vs. Vin that will allow the boost converter to start.

Increase the input voltage to approximately 1.5V or more and increase the load current. The maximum load current depends on the input and output voltage settings. A data sheet curve shows the maximum output current for different input and output voltages.

The PWRGOOD output terminals are high when the output voltages are in regulation and pull low if the output voltage drops by approximately 10%, for any reason.

The LOW BAT output terminal is high when the voltage present on the VINBOOST terminal is greater than the voltage threshold selected by jumper JP2.

The input voltage can exceed the output voltage and still maintain regulation, although the load current is less and efficiency is lower.

When Vin is near VOUT and in the range of approximately 300mV to 100mV below Vout, the converter is approaching the switch minimum ON time resulting in an increased output voltage ripple similar to BURST mode operation. This ripple can be reduced by adding additional output capacitance.

Either regulator can be individually shut down by moving jumpers JP7 or JP8 to the OFF position. Shutting down the Boost Converter drops the converter's output voltage to near 0V.

Jumpers JP7 and JP8 also can also be set for regulator output voltage sequencing. Depending on the jumper setting, one of the regulators will remain shut down until the other regulator has reached regulation.

The linear regulator operation can be verified by increasing the input supply voltage to 5V and applying a suitable load on the VOUT LDO terminal.

If LED indicators for the two Power Good outputs and the Low Battery output are desired, the surface mount 1206 resistors (R5, R7 & R10) can be removed and replaced by surface mount LEDs.

When evaluating the circuit at low input voltages, it is important to monitor the input voltage directly at the input terminals of the circuit board. At very low input voltages, voltage drops in the power supply wire and Ammeter will result in the input voltage at the input terminals dropping below the minimum voltage required for operation.

Additional pc board pads are provided for an optional input bypass capacitor (C1). It maybe necessary when using long wires between the power supply and circuit board, or for adding a tantalum capacitor to minimize input voltage transients that may occur when the input is hot-switched. Also, pads on the board backside are provided for adding a small Schottky diode (D1), which can increase the efficiency slightly under some conditions. But adding a diode defeats the output disconnect and short circuit protection features.

When verifying output ripple, it is important to use the scope probe connection as shown in figure 2.

With JP1 in the Burst position, the converter will operate in a low quiescent current burst mode for light load current conditions and switch to fixed frequency (PWM) operation under heavier loads. In Burst mode, with light loads, the output ripple voltage is higher than in non-burst mode.

Applications requiring BURST mode operation with input voltages below 1.2V, boosting to a voltage between 4 and 5V out, may experience non-BURST mode operation at light load conditions. This will result in higher light load quiescent current. See data sheet curves "Burst Mode Threshold Current vs VIN" for additional information.

See LTC3528 Data Sheet for additional information

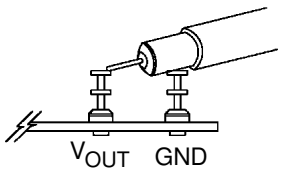

Figure 2. Scope Probe Placement for Measuring Output Ripple Voltage

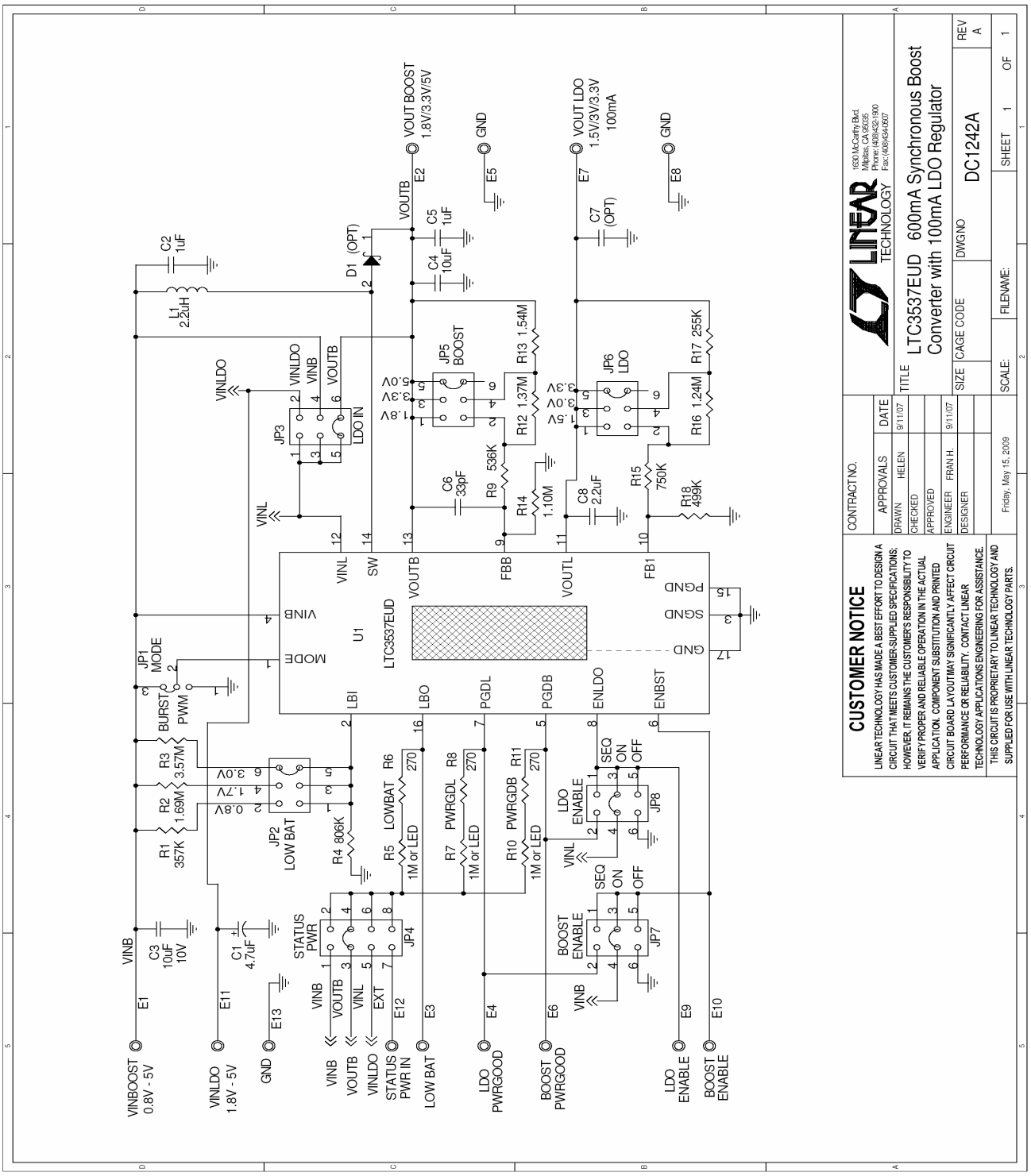
LTC3537EUD 600mA Synchronous Boost Converter with 100mA LDO Regulator
DC1242A
LINEAR TECHNOLOGY
1630 McCarthy Blvd. Milpitas, CA 95035 Phone: (408)432-1900 Fax: (408)434-0507
CUSTOMER NOTICE
LINEAR TECHNOLOGY HAS MADE A BEST EFFORT TO DESIGN A CIRCUIT THAT MEETS CUSTOMER-SUPPLIED SPECIFICATIONS; HOWEVER, IT REMAINS THE CUSTOMER'S RESPONSIBILITY TO VERIFY PROPER AND RELIABLE OPERATION IN THE ACTUAL APPLICATION. COMPONENT SUBSTITUTION AND PRINTED CIRCUIT BOARD LAYOUT MAY SIGNIFICANTLY AFFECT CIRCUIT PERFORMANCE OR RELIABILITY. CONTACT LINEAR TECHNOLOGY APPLICATIONS ENGINEERING FOR ASSISTANCE.
THIS CIRCUIT IS PROPRIETARY TO LINEAR TECHNOLOGY AND SUPPLIED FOR USE WITH LINEAR TECHNOLOGY PARTS.
CONTRACT NO.
APPROVALS
DRAWN HELEN 9/11/07
CHECKED
APPROVED
ENGINEER FRAN H. 9/11/07
DESIGNER
Friday, May 15, 2009
SIZE CAGE CODE DWG NO REV A
SCALE: FILENAME: SHEET 1 OF 1
U1 LTC3537EUD
VINB VINL VINLDO SW VOUTB VOUTL FBB FB1 PGND SGND GND MODE LBI LBO PGDL PGDB ENLDO ENBST
JP1 MODE BURST PWM
JP2 LOW BAT 0.8V 1.7V 3.0V
JP3 VINLDO VINB VOUTB LDO IN
JP4 STATUS PWR
JP5 BOOST 1.8V 3.3V 5.0V
JP6 LDO 1.5V 3.0V 3.3V
JP7 BOOST ENABLE SEQ ON OFF
JP8 LDO ENABLE SEQ ON OFF
L1 2.2uH
D1 (OPT)
C1 4.7uF
C2 1uF
C3 10uF 10V
C4 10uF
C5 1uF
C6 33pF
C7 (OPT)
C8 2.2uF
R1 357K
R2 1.69M
R3 3.57M
R4 806K
R5 LOWBAT 270 1M or LED
R6 270
R7 PWRGDL 270 1M or LED
R8 270
R9 536K
R10 PWRGDB 270 1M or LED
R11 270
R12 1.37M
R13 1.54M
R14 1.10M
R15 750K
R16 1.24M
R17 255K
R18 499K
E1 VINBOOST 0.8V - 5V
E2 VOUT BOOST 1.8V/3.3V/5V
E3 LOW BAT
E4 LDO PWRGOOD
E5 GND
E6 BOOST PWRGOOD
E7 VOUT LDO 1.5V/3V/3.3V 100mA
E8 GND
E9 LDO ENABLE
E10 BOOST ENABLE
E11 VINLDO 1.8V - 5V
E12 STATUS PWR IN
E13 GND