DEMO CIRCUIT 1018B-C
QUICK START GUIDE

LT4356-3
Overvoltage Protection Regulator

FEATURES

Stuffed for Automotive Applications up to 3A

Triple Layout for D-Pak, D2-Pak or S-8 MOSFETs

0.093-inch Turret Holes Accommodate 12 AWG Wire

LEDs Show Input, Outputs, Fault and Enable

Latches Off after Faults

Easily Modified for up to 20A

APPLICATIONS

Servers, Routers, Switches

Mass Storage

Fan Trays

Automotive Modules

DESCRIPTION

Demonstration Circuit DC-1018B-C showcases the LT4356-3 Surge Stopper in a 12V, 3A application. Input transients of up to 60V are limited to 16V at the output; sustained overvoltage conditions cause the limiter to trip off and retry after the overvoltage is removed.

LEDs indicate the presence of +12V input and output, as well as state of the fault output, FLT# and enable output, EN.

LT, LTC, LTM, LT, Burst Mode, OPTI-LOOP, Over-The-Top and PolyPhase are registered trademarks of Linear Technology Corporation. Adaptive Power, C-Load, DirectSense, Easy Drive, FilterCAD, Hot Swap, LinearView, µModule, Micropower SwitcherCAD, Multimode Dimming, No Latency ΔΣ, No Latency Delta-Sigma, No R_{SENSE}, Operational Filter, PanelProtect, PowerPath, PowerSOT, SmartStart, SoftSpan, Stage Shedding, SwitcherCAD, ThinSOT, UltraFast and VLDO are trademarks of Linear Technology Corporation. Other product names may be trademarks of the companies that manufacture the products.

PERFORMANCE SUMMARY

Specifications are at TA = 25°C

SYMBOL	PARAMETER	CONDITIONS	MIN	TYP	MAX	UNITS
V_{IN}	Input Operating Range		4	12	60	V
	Peak Input Voltage	Clipped by Transient Voltage Suppressor			100	V
V_{LIMIT}	Output Limiting Voltage		15.3	16	16.7	V
I_{OUT}	Maximum Load Current		3.5			A

Board Layout

DC1018B-C is a 4-layer board. There are planes for input, output, drain and ground; these are replicated on each layer.

DC1018B-C is stuffed with the LT4356CDE-3 which has a 7µA typical shutdown current. The LT4356CDE-3 latches off after faults, so the OVLO components are not stuffed. R8 is included to provide a modest but predictable rise time on the SHDN# pin and ensure proper reset of the internal fault latch.

The 93 mil input and output connection turrets are not swaged and may be removed for attachment of up to 12 gauge wire. Banana jacks facilitate bench testing.

Sufficient copper is available to support applications of at least 20A.

LEDs are included as quick debug indicators. These LEDs show:

LED1	12V input	Green
LED3	12V output	Green
LED4	FLT#	Red
LED5	EN	Green

The enable and fault LEDs are both powered in such a way that the signals present on their associated turrets are limited in voltage (see schematic). To this end a simple series regulator (Q2 and D6) has been included on the demo board for powering the FLT# output; the FLT# pin itself is rated to 80V.

Modifying Current Limit

DC1018B-C is designed for 3.5A maximum load current and may be modified for higher or lower current levels. Sense resistor RSNS1-3 pads are designed for 1206 or 2010 sense resistors. The LT4356-3 current sense voltage is 50mV, with limiting occurring at 50mV/RSNS. Optional footprints for D2-pak or S-8 MOSFETs allow for much higher or lower current levels. Sufficient copper is present to handle in excess of 20A. If the S-8 footprint is used, move R3 (10 ohms) to the bottom of the board, R3B. This is the gate resistor for the S-8 MOSFET.

At higher currents the clamp DCL must be proportionately increased. This catches the locally generated spike at the MOSFET drain when the output goes into regulation. The energy content of this spike is a direct function of input slew rate and output load capacitance.

Changing Output Regulation Level

The output limiting or regulation voltage is easily modified by simply changing R1 and R2 to values appropriate for the application. The FB pin servo voltage is 1.25V. See the data sheet for a full description of this pin and equations. As built, the demo board clamps at 16V.

The actual operating voltage is independent of the clamping voltage, and may be anything from the minimum operating voltage of 4V up to the clamping voltage. Thus while the demo board is labeled "12V", it can operate with any other sub-16V input such as a 5V regulated supply, a 6V gelcell, or a stack of 8 NiMH cells, or a 9V impedance limited wall cube, to name but a few possible inputs.

Supply Current

The low shutdown current of the LT4356-3 is impossible to measure on the demo board because of the presence of the input LED, LED1, and the LED Supply. Remove R10 and R17 to eliminate these paths.

Note that above 16V, D4 will draw current. Below 16V leakage in D4, Q2's collector-base junction in series with D6 and Q1 will add to the LT4356-3's supply current. These effects are insignificant at room temperature.

Small Turrets

No connection to any of the small turrets is necessary to make the board operate--the LT4356-3 defaults to

the ON state.

SHDN# is pulled high internally. If this turret is left open, the board will turn on when power is applied. Short this turret to ground to turn off the LT4356-3.

FLT# pulls low after a TMR interval if there is a sustained input overvoltage, and does so 2ms before the output shuts down. Otherwise FLT# is high, pulled up by LED4 and the 5V LED Supply.

EN is an output. It goes high when the 12V output rises to within 700mV of the input. EN is latched and does not pull low again until the LT4356-3 trips off from a sustained overvoltage or is shut down. EN is pulled up to the output through a 3.9 kilo-ohm resistor, and is shunted by LED5. Use EN to enable downstream circuitry.

Input Overvoltage Behavior

The LT4356-3 is designed to block transient voltages and surges from reaching load circuitry of limited voltage capability. This has a profound impact on the voltage rating of downstream components as well as topology where dc-to-dc converters are concerned, not to mention elimination of bulky input filter inductors and capacitors.

To this end, Q1 is selected for a 3A application where the surges and transients are consistent with an automotive environment.

DC1018B-C is designed to ride through input transients of 1 or 2ms duration, but will shut down during load dump. Q1 must dissipate significant energy to support a 3A load during load dump, so a larger MOSFET is necessary if Q1 is to survive. CTMR must be increased to accommodate the proposed time interval if this modification is contemplated.

Locally Generated Drain Spikes

When an input transient waveform is applied to an operating LT4356-3, the MOSFET is fully on and a large magnitude displacement current flows into the load capacitors, CL1 and CL2 (collectively, CL) and any other off-board load capacitors. The LT4356-3 has a relatively soft current limit amplifier to prevent detection of current pulses generated by noise spikes. This soft response prevents the LT4356-3 from responding to the initial current surge in CL.

The current surge is limited only by the feedpoint impedance of the supply, the transient rising slew rate and the capacitance and ESR of CL. The current surge is commutated by the MOSFET once CL charges to Vgate-Vthreshold, and results in a wide-bandwidth voltage spike at the input, limited only by the breakdown of input clamp DCL. Without DCL the input voltage could easily exceed 100V and destroy the LT4356-3.

Under normal conditions (typical automotive transients and surges) the input rise time is 10µs or more, and the CL displacement current is moderate. Drain spikes are thereby limited in amplitude.

When bench testing, input rise times may easily reach 100ns creating an environment for destructive drain spikes, generated by the MOSFET itself.

To protect the LT4356-3 from damage during bench testing with fast-rising input edges, an SMAJ58A TransZorb has been chosen for diode clamp DCL. This component clamps the drain spike to less than 100V. The knee is around 64V. If a dc voltage higher than 60V is connected to DC1018B-C, DCL will be destroyed. Transients to 80V are permissible as the current in DCL will be limited by wiring inductance. Further, the energy is limited because the time spent in conduction by DCL is short.

Basic Operation

Connect a 12V supply to input, and the load to output. The circuit will turn on automatically when power is

applied.

To test the voltage limiter, apply a transient to the 12V Input. One method of coupling a transient without backfeeding the 12V supply is shown in the Connection Diagram, attached. If the input transient is short the output simply limits at 16V and then recovers to 12V. If the transient is sustained, the output will rise to 16V, regulate there and then shut down. The exact timing and the dividing line between "short" and "sustained" is a function of the input waveform amplitude and shape (see the data sheet). The timing interval is controlled by CTMR and the TMR pin according to equations in the data sheet. After faulting off, the LT4356-3 latches off. Reset by cycling power or by toggling the SHDN# pin.

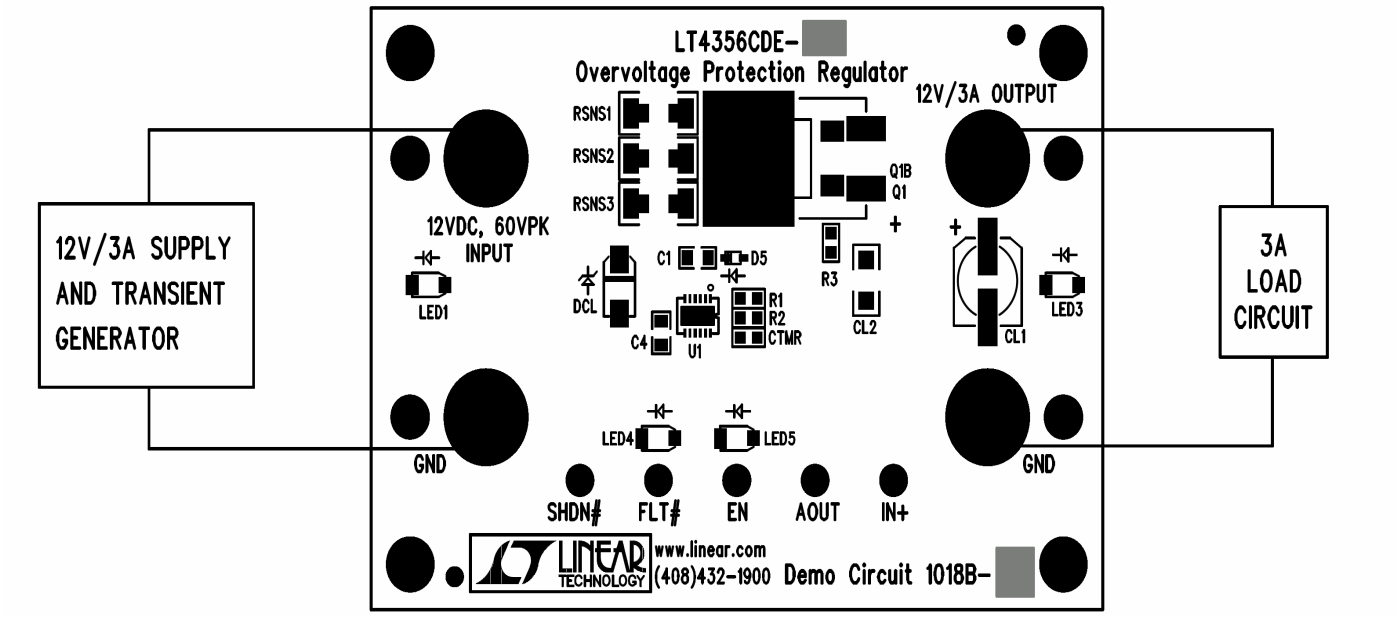

Figure 1: Proper Measurement Equipment Setup

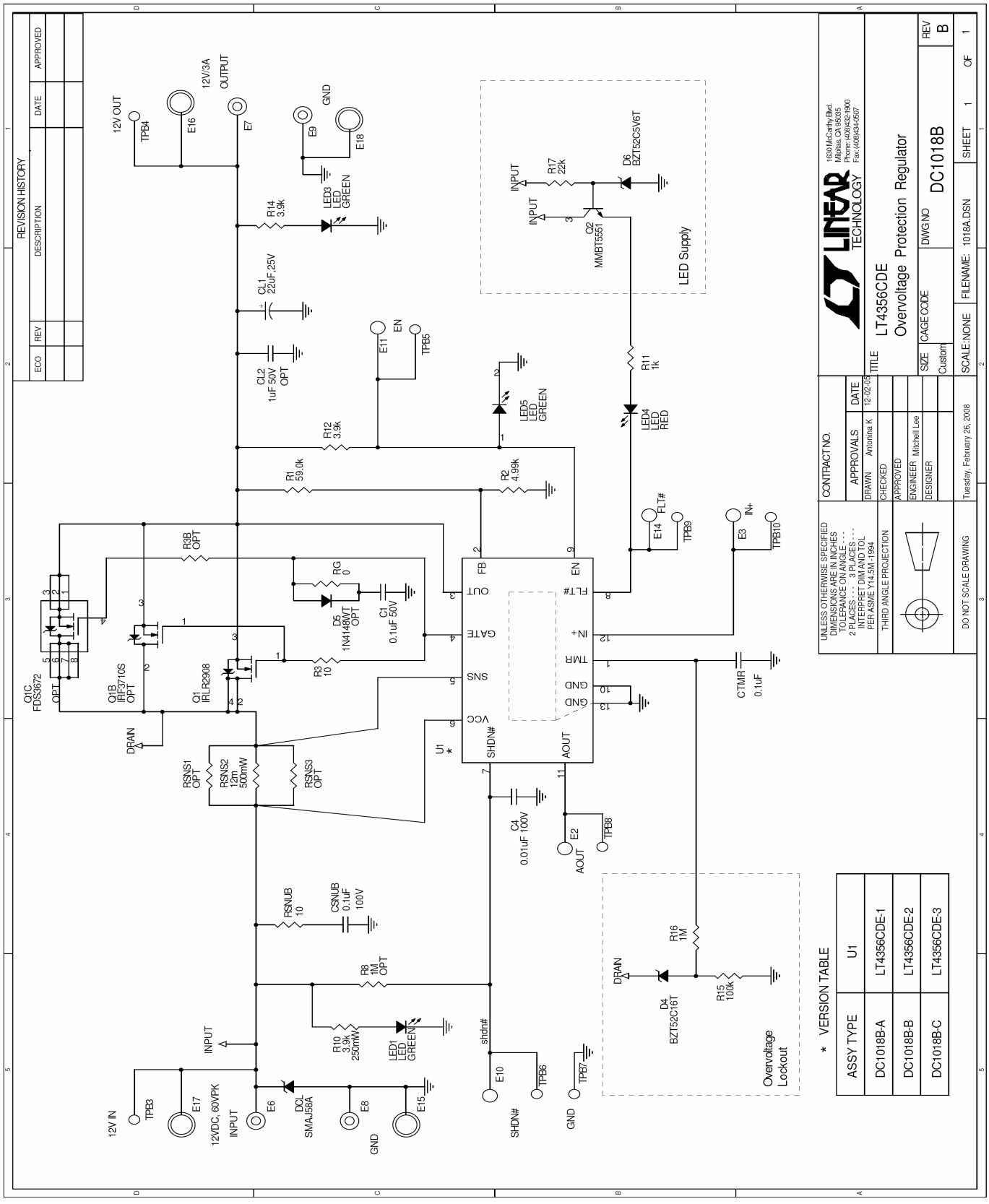
REVISION HISTORY
ECO
REV
DESCRIPTION
DATE
APPROVED
12V OUT
TPB4
E16
12V/3A
OUTPUT
E7
E9
GND
E18
LED3
LED
GREEN
R14
3.9k
CL1
22uF 25V
CL2
1uF 50V
OPT
E11
EN
TPB5
R12
3.9k
R1
59.0k
R2
4.99k
R3B
OPT
RG
0
D5
1N4148WT
OPT
C1
0.1uF 50V
R3
10
Q1C
FDS3672
OPT
Q1B
RFP3710S
OPT
Q1
IRLR2908
DRAIN
RSNS1
OPT
RSNS2
12m
500mW
RSNS3
OPT
U1
*
FB
OUT
GATE
SNS
VCC
SHDN#
AOUT
EN
FLT#
IN+
TMR
GND
GND
GND
C4
0.01uF 100V
E2
AOUT
TPB8
CTMR
0.1uF
E14
FLT#
TPB9
E3
IN+
TPB10
LED5
LED
GREEN
LED4
LED
RED
R11
1k
INPUT
R17
22k
D6
BZT52C5V6T
INPUT
Q2
MMBT5551
LED Supply
RSNUB
10
CSNUB
0.1uF
100V
R8
1M
OPT
R10
3.9k
250mW
LED1
LED
GREEN
INPUT
12V IN
TPB3
E17
12VDC, 60VPK
INPUT
E6
DCL
SMAJ58A
E8
GND
E15
shdn#
E10
SHDN#
TPB6
GND
TPB7
DRAIN
R16
1M
D4
BZT52C16T
R15
100k
Overvoltage
Lockout
* VERSION TABLE
ASSY TYPE
U1
DC1018B-A
LT4356CDE-1
DC1018B-B
LT4356CDE-2
DC1018B-C
LT4356CDE-3
UNLESS OTHERWISE SPECIFIED
DIMENSIONS ARE IN INCHES
TOLERANCE ON ANGLE - - -
2 PLACES - - - 3 PLACES - - -
INTERPRET DIM AND TOL
PER ASME Y14.5M -1994
THIRD ANGLE PROJECTION
DO NOT SCALE DRAWING
CONTRACT NO.
APPROVALS
DATE
DRAWN Antonina K. 12-02-05
CHECKED
APPROVED
ENGINEER Mitchell Lee
DESIGNER
LINEAR TECHNOLOGY
1630 McCarthy Blvd.
Milpitas, CA 95035
Phone: (408)432-1900
Fax: (408)434-0507
TITLE
LT4356CDE
Overvoltage Protection Regulator
SIZE
Custom
CAGE CODE
DWG NO
DC1018B
REV
B
SCALE: NONE
FILENAME: 1018A.DSN
SHEET 1 OF 1
Tuesday, February 26, 2008