Surface Mount

Digital Step Attenuator DAT-15575A Series

75Ω 0 to 15.5 dB, 0.5 dB Step 1MHz to 2.5 GHz

The Big Deal

- Wideband, operates up to 2.5 GHz
- Glitchless attenuation transitions
- High IP3, 52 dBm

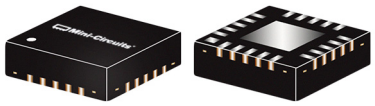

CASE STYLE: DG983-2

Product Overview

The DAT-15575A+ series of 75Ω digital step attenuators provides adjustable attenuation from 0 to 15.5 dB in 0.5 dB steps. The control is a 5-bit serial/parallel interface, and the attenuators operate with either single positive or dual (positive and negative) supply voltage. DAT-15575A+ series models are produced by a unique CMOS process on silicon, offering the performance of GaAs with the advantages of conventional CMOS devices.

Key Features

Feature	Advantages
Wideband operation, specified from 1MHz to 2.5 GHz	Can be used in multiple applications such as various versions of DOCSIS, satellite and defense, reducing part count.
Serial or parallel interface	Models available with serial or parallel interface mode to suit customer demand.
Good VSWR, 1.3:1 typ.	Eases interfacing with adjacent components and results in low amplitude ripple.
Single positive supply models: (Model suffixes: -SP+ and –PP+) +2.3 to +3.6V+	Use of single positive supply simplifies power supply design. An internal negative voltage generator supplies the desired negative voltage. Single positive supply results in excellent spurious performance, -140 dBm typical.
Dual supply models: (Model suffixes: -SN+ and –PN+) +2.7 to +3.6V (Positive) and -3.6 to -3.2V (Negative)	Dual supply provides spurious-free operation. It also allows fast switching up to 1 MHz (vs. 25 kHz for single supply).
Useable over a wide range of supply voltages, +2.3/2.7 to 5.2V	Wide range fo positive operating voltages allows the DAT-15575A+ Series of models to be used in a wide range of applications. See Application Note AN-70-032 for operation above +3.6V
Footprint compatible to DAT-15575-XX+ Series (XX=SN/SP/PN/PP)	Can fit into existing footprint and provide wideband performance, to 2.5 GHz instead of 2.0 GHz.
Glitchless Attenuation Transitions, 0.26 typical	Compared to previous generation of digital attenuatiors which is a vast improvement.

Digital Step Attenuator

75Ω 1-2500 MHz

15 dB, 0.5 dB Step
5 Bit, Parallel Control Interface, Single Supply Voltage

- Single positive supply voltage
- Immune to latch up
- Glitchless attenuation transitions
- Excellent accuracy, 0.1 dB Typ
- Low Insertion Loss
- High IP3, +55-59 dBm Typ
- Very low DC power consumption
- Excellent return loss, 18 dB Typ
- Small size 4.0 x 4.0 mm

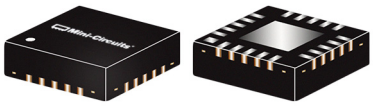

DAT-15575A-PP+

CASE STYLE: DG983-2

+RoHS Compliant

The +Suffix identifies RoHS Compliance. See our web site for RoHS Compliance methodologies and qualifications

Typical Applications

- DOCSIS 3.1
- Portable Wireless
- CATV & DBS
- MMDS & Wireless LAN
- Wireless Local Loop
- UNII & Hiper LAN
- Power amplifier distortion canceling loops

General Description

The DAT-15575A-PP+ is a 75Ω RF digital step attenuator that offers an attenuation range up to 15.5 dB in 0.5 dB steps. The control is a 5-bit parallel interface, operating on single (positive) supply voltage. The DAT-15575A-PP+ is produced using a unique CMOS process on silicon, offering the performance of GaAs, with the advantages of conventional CMOS devices.

Simplified Schematic

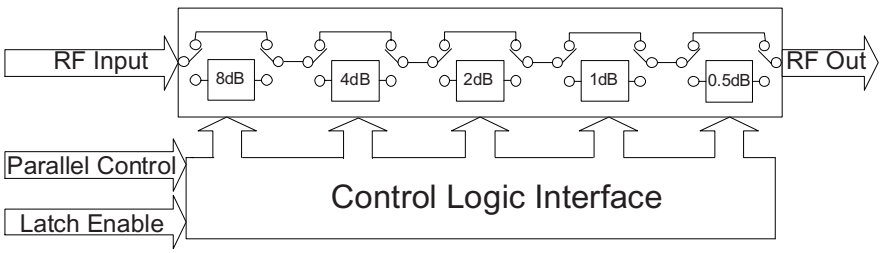

RF Electrical Specifications, 1-2500 MHz, T_{AMB}=25°C, V_{DD}=+3V, 75Ω

Parameter	Freq. Range (GHz)	Min.	Typ.	Max.	Units
Accuracy @ **0.5 dB** Attenuation Setting	0.001-1.2	—	0.03	0.17	dB
	1.2-2.0	—	0.05	0.18	
	2.0-2.5	—	0.1	0.19	
Accuracy @ **1 dB** Attenuation Setting	0.001-1.2	—	0.03	0.18	dB
	1.2-2.0	—	0.1	0.20	
	2.0-2.5	—	0.1	0.23	
Accuracy @ **2 dB** Attenuation Setting	0.001-1.2	—	0.07	0.21	dB
	1.2-2.0	—	0.15	0.26	
	2.0-2.5	—	0.15	0.31	
Accuracy @ **4 dB** Attenuation Setting	0.001-1.2	—	0.05	0.27	dB
	1.2-2.0	—	0.15	0.36	
	2.0-2.5	—	0.2	0.47	
Accuracy @ **8 dB** Attenuation Setting	0.001-1.2	—	0.1	0.39	dB
	1.2-2.0	—	0.24	0.60	
	2.0-2.5	—	0.35	0.79	
Insertion Loss[1] @ all attenuator set to 0dB	0.001-1.2	—	1.2	1.8	dB
	1.2-2.5	—	1.6	1.9	
VSWR	0.001-1.2	—	1.3	—	:1
	1.2-2.5	—	1.4	—	
Input IP3 (at Min. and Max. Attenuation)	.005-2.5	—	55-69	—	dBm
Input IP2	.005-2.5		See Fig. 1		dBm
Input Power @ 0.2dB Compression (at Min. and Max. Attenuation)	0.030-2.5	—	+30	—	dBm
Input Operating Power	1 MHz to 30 MHz	—	—	See Fig. 2	dBm
	>30 MHz	—	—	+24	
Thermal Resistance (Junction to case)	—	—	25	—	°C/W

DC Electrical Specifications

Parameter	Min.	Typ.	Max.	Units
V_{DD}, Supply Voltage	2.3	3	3.6[2]	V
I_{DD}, Supply Current	—	—	200	µA
Control Input Low	-0.3	—	0.6[3]	V
Control Input High	1.17	—	3.6	V
Control Current	—	—	20	µA

1. I. Loss values are de-embedded from test board Loss (test board's Insertion Loss: 0.10dB @100MHz, 0.40dB @1200MHz, 0.55dB @2000MHz, 0.75dB @4000MHz).
2. For operation above +3.6V see application note, AN-70-032
3. 0V during power-up.

Absolute Maximum Ratings[4]

Parameter		Ratings
Operating Temperature		-40°C to 105°C
Storage Temperature		-65°C to 150°C
V_{DD}		-0.3V Min., 5.5V Max.
Voltage on any input		-0.3V Min., 3.6V Max.
Input Power	1-30 MHz	Figure 2
	30-2500MHz	+30dBm

4. Permanent damage may occur if any of these limits are exceeded.
5. Operation between max operating and absolute max input power will result in reduced reliability.
6. 0 Volt during power up.

Switching Specifications

Parameter	Min.	Typ.	Max.	Units
Switching Speed, 50% Control to 90% or 10% RF	—	0.4	0.7	µSec
Switching Control Frequency	—	—	25	kHz

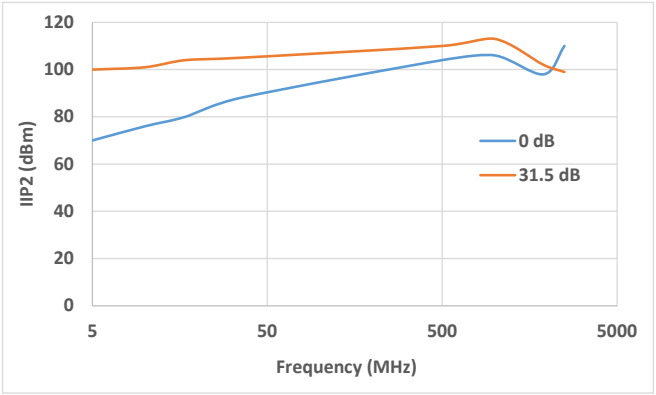

Figure 1. IP2 vs. frequency and attenuation

Pin Description

Function	Pin Number	Description
N/C	1	Not connected (Note 4,7)
RF in	2	RF in port (Note 1)
N/C	3	Not connected (Note 4)
GND	4	Ground connection
LE	5	Latch Enable Input (Note 2)
V_{DD}	6	Positive Supply Voltage
N/C	7	Not connected (Note 7)
PUP2	8	Power-up selection
V_{DD}	9	Positive Supply Voltage
GND	10	Ground connection
GND	11	Ground connection
GND	12	Ground connection (Note 6)
GND	13	Ground connection
RF out	14	RF out port (Note 1)
C8	15	Control for attenuation bit, 8 dB
C4	16	Control for attenuation bit, 4 dB
C2	17	Control for attenuation bit, 2 dB
GND	18	Ground Connection
C1	19	Control for attenuation bit, 1 dB
C0.5	20	Control for attenuation bit, 0.5 dB (Note 7)
GND	Paddle	Paddle ground (Note 5)

Notes:
1. Both RF ports must be held at 0VDC or DC blocked with an external series capacitor.
2. Latch Enable (LE) has an internal 2MΩ to internal positive supply voltage.
3. N/A
4. Place a shunt 10KΩ resistor to GND
5. The exposed solder pad on the bottom of the package (See Pin configuration) must be grounded for proper device operation.
6. Ground must be less than 80 mil (0.08") from Pin 12 for proper device operation.
7. This pin has an internal 1MΩ resistor to ground.

Pin Configuration (Top View)

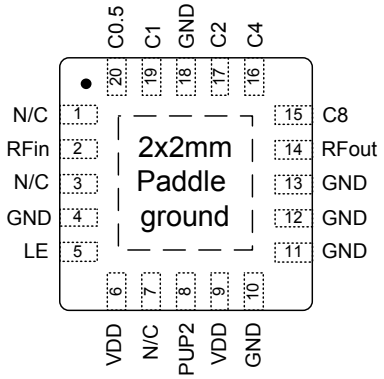

Device Marking

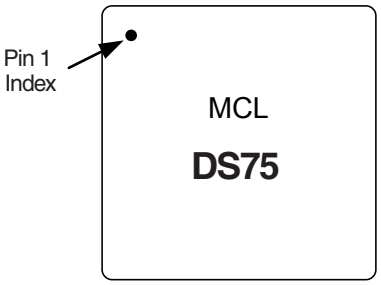

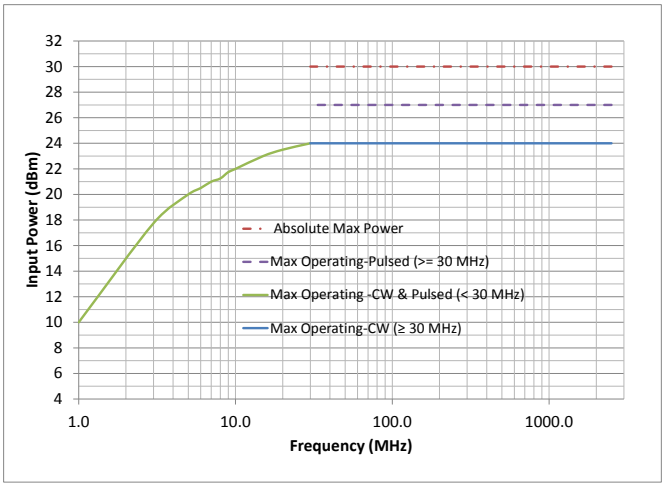

Figure 2. Max Input power vs. frequency.
Pulsed Power: 5% duty cycle, 4620 µS period

Simplified Schematic

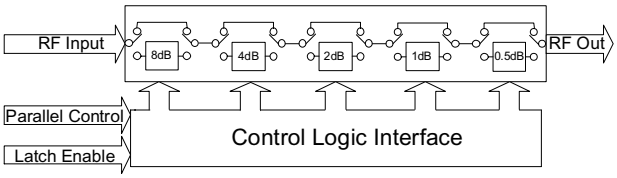

The DAT-15575A-PP+ parallel interface consists of 5 control bits that select the desired attenuation state, as shown in Table 1: Truth Table

Table 1. Truth Table

Attenuation State	C8	C4	C2	C1	C0.5
Reference	0	0	0	0	0
0.5 (dB)	0	0	0	0	1
1 (dB)	0	0	0	1	0
2 (dB)	0	0	1	0	0
4 (dB)	0	1	0	0	0
8 (dB)	1	0	0	0	0
15.5 (dB)	1	1	1	1	1

Note: Not all 32 possible combinations of C0.5 - C8 are shown in table

The parallel interface timing requirements are defined by Figure 3 (Parallel Interface Timing Diagram) and Table 2 (Parallel Interface AC Characteristics), and switching speed.

For latched parallel programming the Latch Enable (LE) should be held LOW while changing attenuation state control values, then pulse LE HIGH to LOW (per Figure 1) to latch new attenuation state into device.

For direct parallel programming, the Latch Enable (LE) line should be pulled HIGH. Changing attenuation state control values will change device state to new attenuation. Direct mode is ideal for manual control of the device (using hardwire, switches, or jumpers).

Figure 3: Parallel Interface Timing Diagram

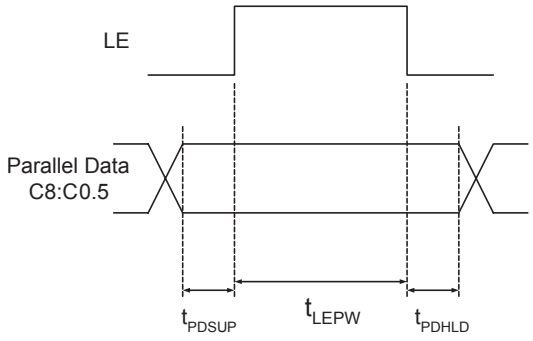

Table 2. Parallel Interface AC Characteristics

Symbol	Parameter	Min.	Max.	Units
t_{LEPW}	LE minimum pulse width	10		ns
t_{PDSUP}	Data set-up time before clock rising edge of LE	10		ns
t_{PDHLD}	Data hold time after clock falling edge of LE	10		ns

Power-up Control Settings

The DAT-15575A-PP+ always assumes a specifiable attenuation setting on power-up, allowing a known attenuation state to be established before an initial parallel control word is provided.

When the attenuator powers up with LE=0, the control bits are automatically set to one of two possible values .These two values are selected by the power-up control bit, PUP2, as shown in Table 3: (Power-Up Truth Table, Parallel Mode).

Table 3. Power-Up Truth Table, Parallel Mode

Attenuation State	PUP2	LE
Reference	0	0
8 (dB)	1	0
Defined by C0.5-C8 (See Table 1-Truth Table)	X (Note 1)	1

Note 1: PUP2 Connection may be 0, 1, GROUND, or not connect, without effect on attenuation state.

Power-Up with LE=1 provides normal parallel operation with C0.5-C8 and PUP2 is not active.

TB-337 Evaluation Schematic Diagram

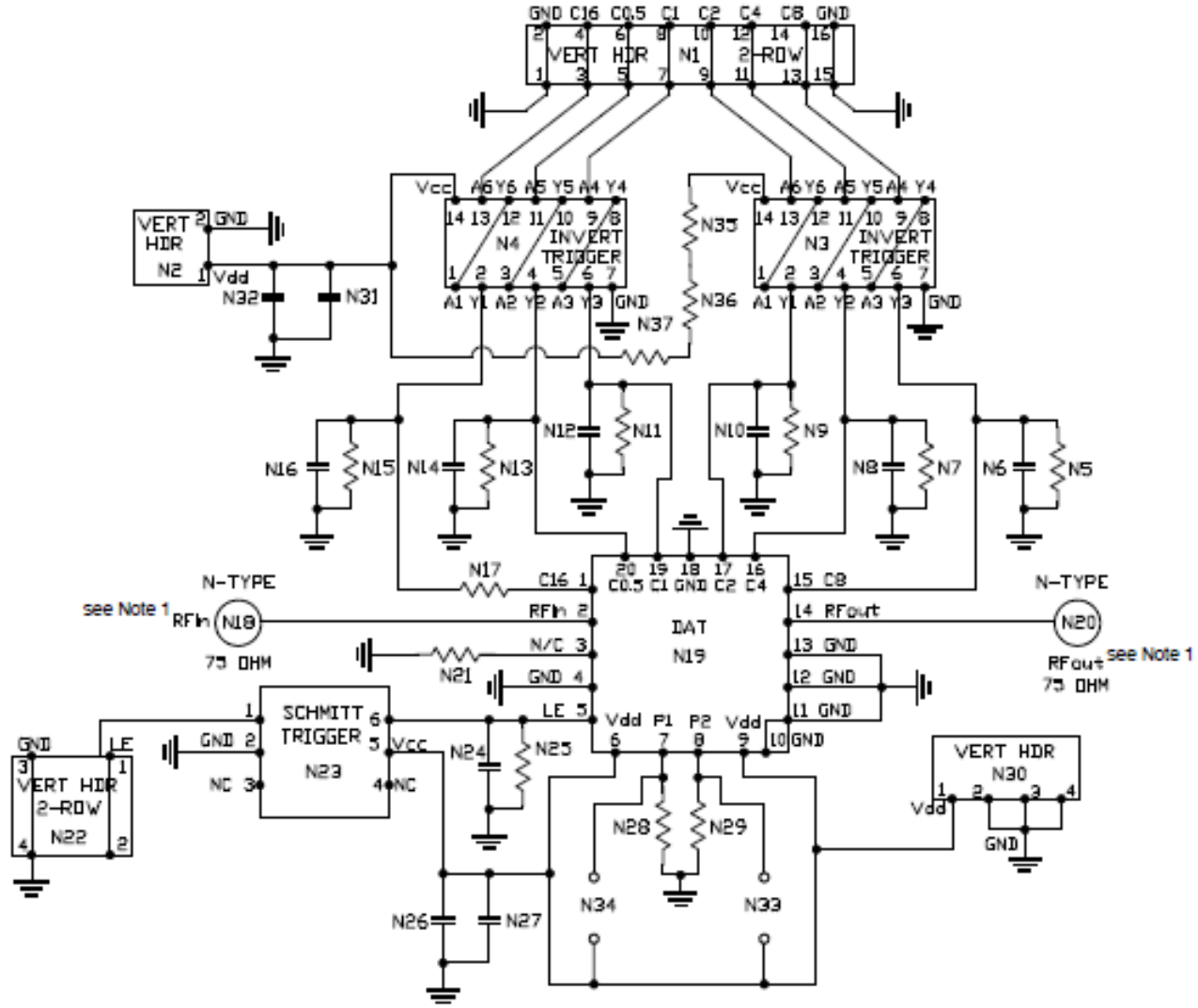

Note 1: Both RF ports must be held at 0VDC or DC blocked with an external series capacitor.

Bill of Materials	
N5, N7, N9, N11, N13, N15, N21 & N25	Resistor 0603 10 KOhm +/- 1%
N28 & N29	Resistor 0603 475 Ohm +/- 1%
N35-N37	Resistor 0603 0 Ohm
N17	Resistor 0402 10 KOhm +/- 1%
N6, N8, N10, N12, N14, N16, N24, N26 & N32	NPO Capacitor 0603 100pF +/- 5%
N27 & N31	Tantalum Capacitor 0805 100nF +/- 10%
N3 & N4	Hex Invert Schmitt Trigger MSL1
N23	Dual Schmitt Trigger Buffer SC-70 MSL1

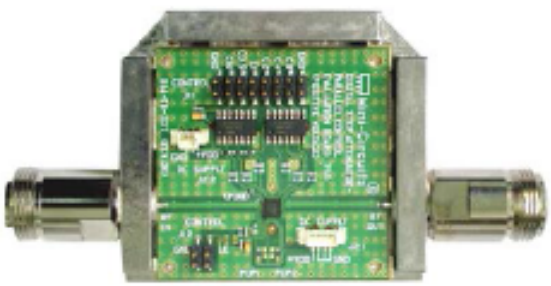

TB-337

Additional Detailed Technical Information *additional information is available on our dash board. To access this information click here*	
Performance Data	Data Table
	Swept Graphs
	S-Parameter (S2P Files) Data Set (.zip file)
Case Style	DG983-2 *Plastic package, exposed paddle, lead finish: NiPdAu*
Tape & Reel **Standard quantities available on reel**	F87 *7" reels with 20, 50, 100, 200, 500 Or 1000 devices* *13" reels with 3K devices*
Suggested Layout for PCB Design	PL-201
Evaluation Board	TB-337
Environmental Ratings	ENV33T1

ESD Rating

Human Body Model (HBM): Class 1C (1000 to <2000V) in accordance with MIL-STD-883 method 3015
Charge Device Model class C2 (500 to <1000V) per JESD22-C101

MSL Rating

Moisture Sensitivity: MSL1 in accordance with IPC/JEDEC J-STD-020D

MSL Test Flow Chart

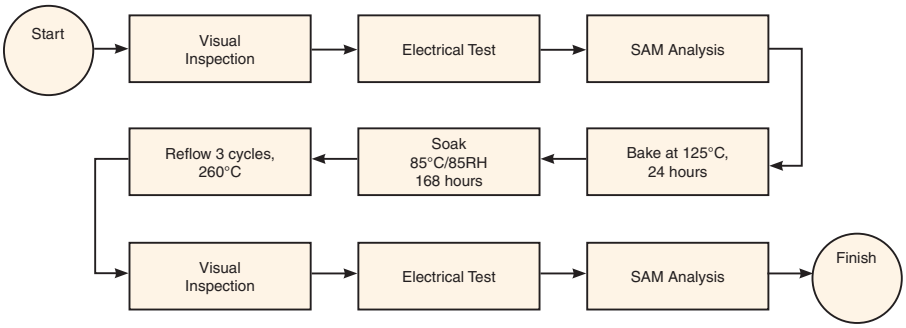

Additional Notes

A. Performance and quality attributes and conditions not expressly stated in this specification document are intended to be excluded and do not form a part of this specification document.

B. Electrical specifications and performance data contained in this specification document are based on Mini-Circuit's applicable established test performance criteria and measurement instructions.

C. The parts covered by this specification document are subject to Mini-Circuits standard limited warranty and terms and conditions (collectively, "Standard Terms"); Purchasers of this part are entitled to the rights and benefits contained therein. For a full statement of the Standard Terms and the exclusive rights and remedies thereunder, please visit Mini-Circuits' website at www.minicircuits.com/MCLStore/terms.jsp