DALI-PWM Signal Converter

DAP-04 series



Features

- Universal AC input / Full range (up to 305VAC)
- Convert DALI signal to PWM signal
- 4 DALI addressable output channels
- Built-in push dim function
- Comply with DALI standards (IEC62386-101, 102, 207)
- PWM active high or active low selectable by jumper
- Linear or logarithm dimming curve selectable (comply with IEC62386-207)
- Dimming range : 1 ~ 100%
- Built-in relay for ON/OFF control of LED power supply
- Fully isolated plastic case
- Class Ⅱ power unit, no FG
- IP20 design
- Power consumption < 0.5W (Note.1)
- 3 years warranty

Applications

- Indoor lighting
- Office lighting
- Decorative lighting
- Input signal : DALI or push dim
  Output signal : open collector PWM signal

Description

DAP-04 series is a "DALI signal to PWM signal" converter, specifically working with the MEAN WELL AC/DC LED power supplies with 3-in-1 dimming function (1~10V / PWM / Resistance).

Order Name Encoding

DAP - 04 - □

- Blank : Standard model with ACT-HI function
- S01 : Standard model with 4 or 1 DALI address selectable function (Note.2)

Number of output channels

Series name

SPECIFICATION

MODEL		DAP-04	
OUTPUT	ORDER NAME	DAP-04	DAP-04-S01
	NUMBER OF OUTPUT CHANNELS	4	
	OUTPUT SIGNAL	PWM, 1KHz (Typ.)	
	OUTPUT PWM LOGIC	Active high or active low selectable by jumper ; Factory setting is active high	
	DIMMING RANGE	1 ~ 100%	
INPUT	VOLTAGE RANGE	90 ~ 305VAC 127 ~ 431VDC [DC input operation possible by connecting AC/L(+), AC/N(-)]	
	FREQUENCY RANGE	47 ~ 63Hz	
	AC CURRENT (Typ.)	0.1A	
	INRUSH CURRENT (Typ.)	COLD START 15A(t_{width}=500μs measured at 50% I_{peak}) at 230VAC	
	LEAKAGE CURRENT	<0.5mA / 240VAC	
	POWER CONSUMPTION (Typ.)	0.5W	
	INPUT SIGNAL	DALI or push dim	
FUNCTION	RELAY SWITCH	240VAC / 8A, ON / OFF control refer to DIM1	
ENVIRONMENT	WORKING TEMP.	-30~ +60℃	
	WORKING HUMIDITY	20 ~ 90% RH non-condensing	
	STORAGE TEMP., HUMIDITY	-40 ~ +80℃, 10 ~ 95% RH	
	VIBRATION	10 ~ 500Hz, 2G 10min./1cycle, period for 60min. each along X, Y, Z axes	
SAFETY & EMC	SAFETY STANDARDS	EN61347-1, EN61347-2-11, EN61058-1 Clause 8/17/20/25 approved	
	DALI STANDARDS	Comply with IEC62386-101, 102, 207	
	WITHSTAND VOLTAGE	I/P-O/P:3.75KVAC	
	ISOLATION RESISTANCE	I/P-O/P:>100M Ohms / 500VDC / 25℃/ 70% RH	
	EMC EMISSION	Compliance to EN55015, EN61000-3-2,3	
	EMC IMMUNITY	Compliance to EN61000-4-2,3,4,5,6,8,11, EN61547 light industry level (surge 2KV), criteria A	
OTHERS	MTBF	246.9K hrs min. MIL-HDBK-217F (25℃)	
	DIMENSION	165*46*23mm (L*W*H)	
	PACKING	0.16Kg; 84pcs/14.4Kgs/1.14CUFT	
NOTE	1. Power consumption<0.5W is measured at 230VAC. 2. Refer to DAP-04-S01 technical note.		

■ Block Diagram

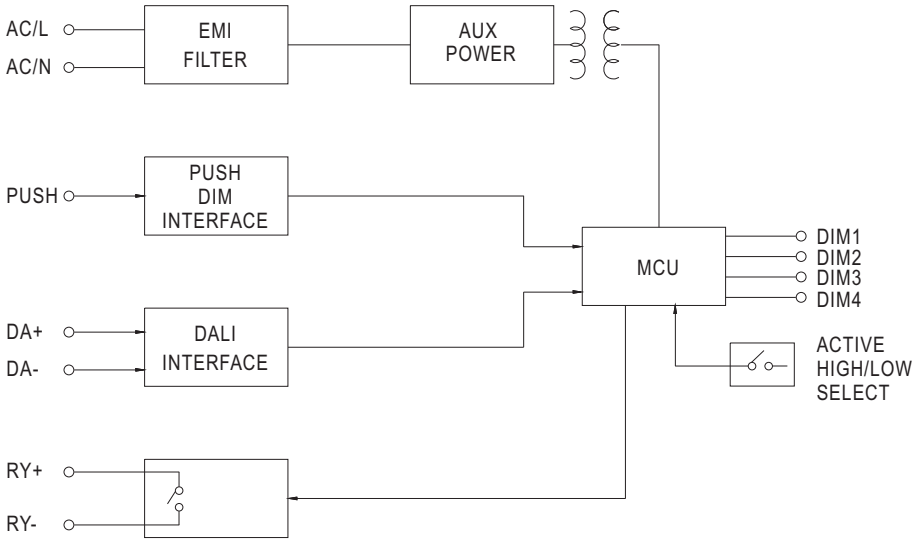

■ DIMMING OPERATION

※ PUSH dim(primary side)

Function	Pushing time
No change of state	<0.05 sec.
Turn ON-OFF	0.1~1 sec.
Dimming up or down	1.5~10 sec.
Setting light to 100%	>11 sec.

- Maximum length of the cable, from push button to last driver, is 20 meter.
- Factory default dimming setting : 100%.
- Every long pushing action will change the dimming direction.

※ DALI interface(primary side)

- DALI protocol including 16 groups and 64 addresses.

■ Connection of Dimming Operation

- DALI Dimming solution :

  DAP-04 series with MEAN WELL's LED power supply

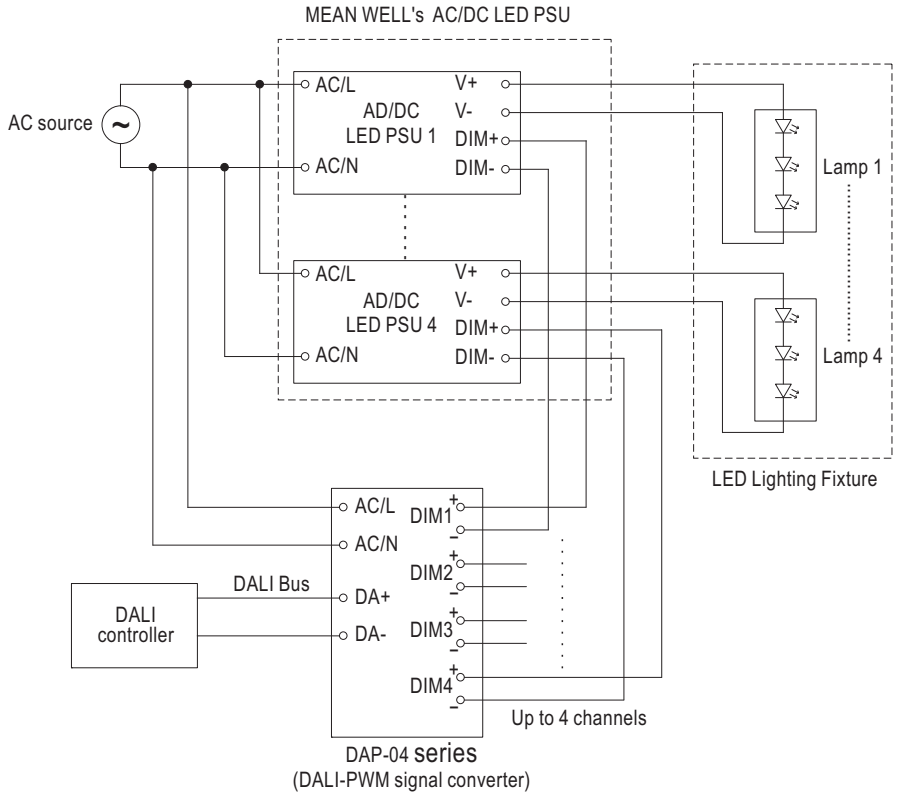

※Note: 1.Choose a suitable cable for connecting the DAP-04 series and DALI controller and make sure the maximum voltage drop between these two units should not be higher than 2V. (Maximum cable length for 1.5mm^2 cables is 300m.)

2.Only DIM 1 has output PWM dimming signal for DAP-04-S01 with 1 DALI address function.

- Push Dimming Solution :

  DAP-04 series with MEAN WELL's LED power supply

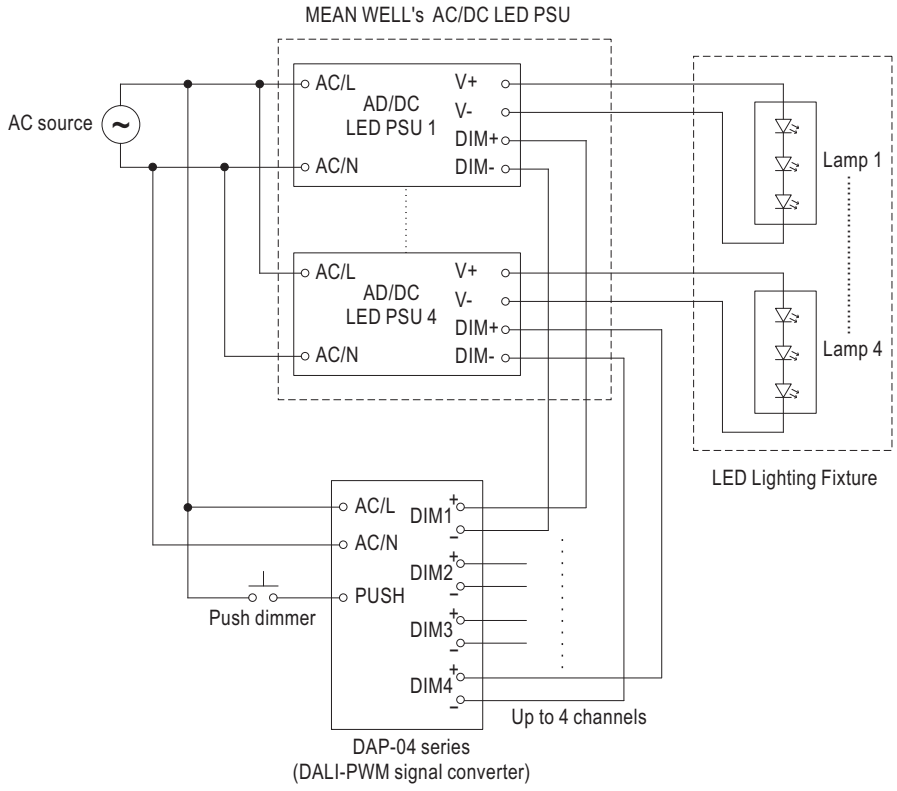

※Note: 1.Only use Normally Open Push Button without light indicator .

2.Refer to DAP-04-S01 technical note.

■ Dimming with LED PSU ON/OFF

- The DAP-04 series is equipped with a relay that can be used to turn ON/OFF MEAN WELL LED PSUs. The relay is in the closed position when the DIM1 generates dimming signal; the relay is in the open position when there is no output signal on the DIM1.

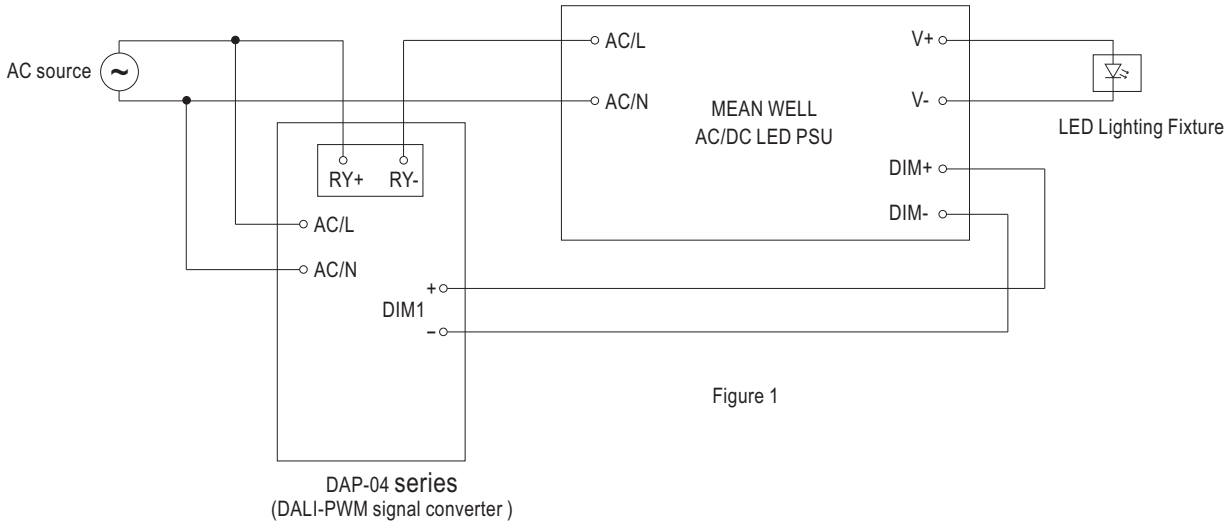

Figure 1

- An additional magnetic switch is needed when the total input current of the selected LED PSUs is higher than 8A or used with LED PSUs whose inrush current is greater than 50A, please refer to the figure 2.

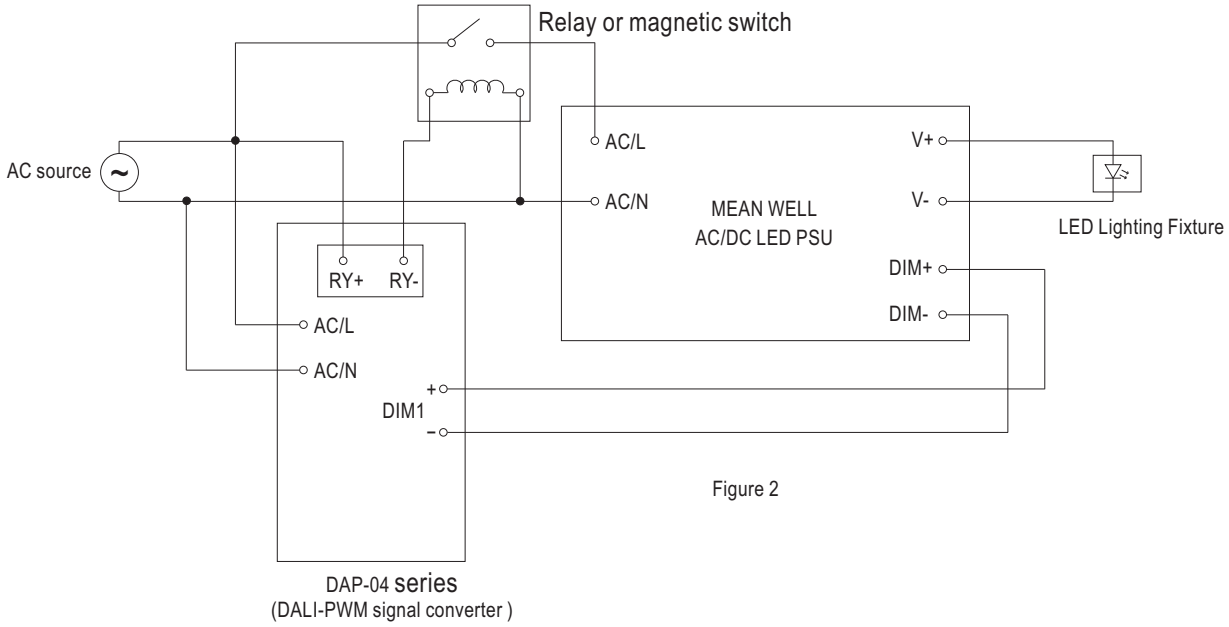

Figure 2

■ SYNCHRONIZATION OPERATION

- DAP-04 series provides 4-channel outputs; every channel controls up to 20 units of MEAN WELL LED PSU. The 4 channels can thus control up to 80 units of MEAN WELL LED PSU. (Note. 1)
- The dimming percentage of the MEAN WELL LED PSUs controlled by the same channel of DAP-04 is the same. The dimming percentage per DAP-04 series channel can be controlled independently.
- The maximum allowable voltage drop between the DAP-04 series and LED PSUs should not be higher than 0.5V.

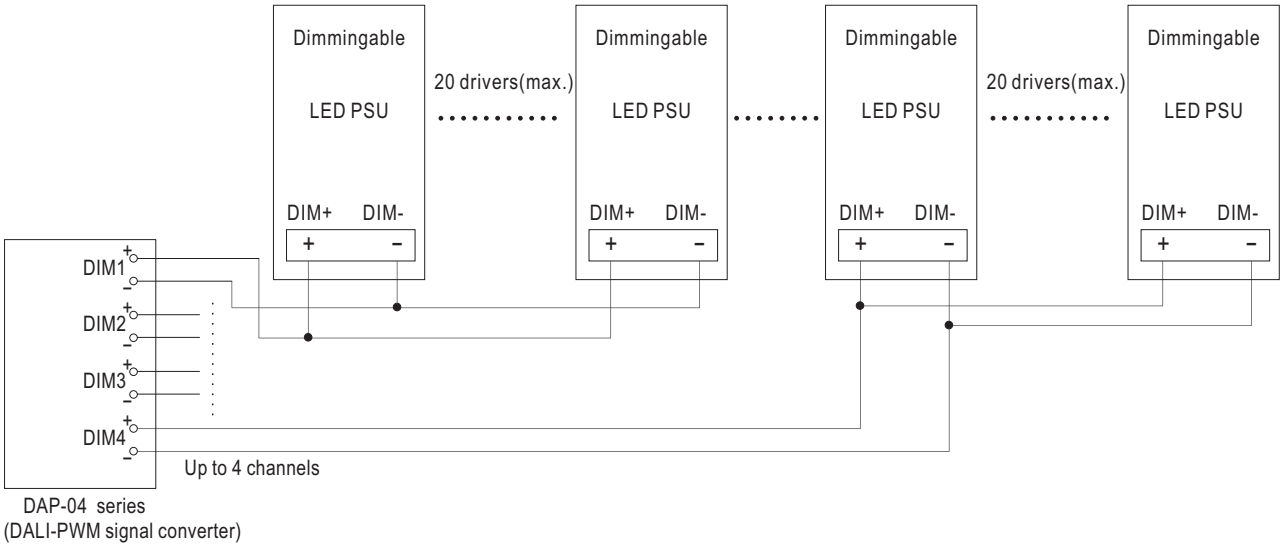

Note. 1 .Light intensity of LEDs in the same group may be decreased when one of the LED PSUs is AC OFF.
2.Refer to DAP-04-S01 technical note.

■ Mechanical Specification

Case No.DAP-04 Unit:mm

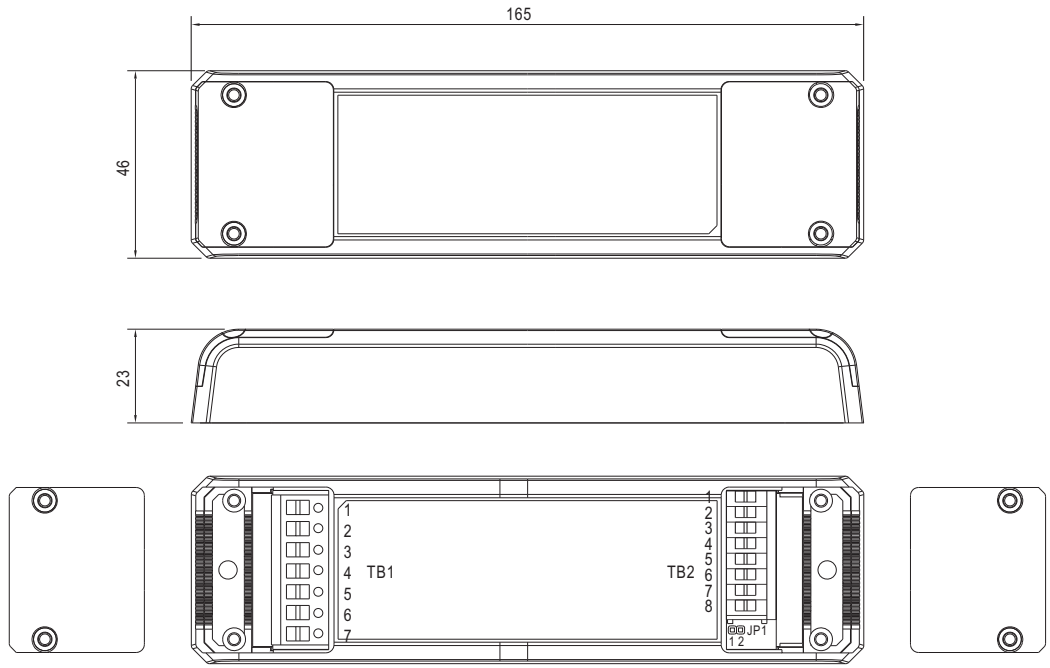

Terminal Pin No. Assignment(TB1)

Pin No.	Assignment	Pin No.	Assignment
1	AC/L	5	DA-
2	AC/N	6	RY+
3	PUSH	7	RY-
4	DA+		

Terminal Pin No. Assignment(TB2)

Pin No.	Assignment	Pin No.	Assignment
1	DIM1+	5	DIM3+
2	DIM1-	6	DIM3-
3	DIM2+	7	DIM4+
4	DIM2-	8	DIM4-

Terminal Pin No. Assignment(JP1)

Pin No.	Order Name	Assignment
1,2	DAP-04	ACT-HI
	DAP-04-S01	DALI Nr.

■ Function Description of TB1

Pin No.	Function	Description
1	AC/L	AC Line connection.
2	AC/N	AC Neutral connection.
3	PUSH	Dimming input. One pushbutton connected between the PUSH and AC/L.
4	DA+	DALI Signal positive.
5	DA-	DALI Signal negative.
6,7	RY+ / RY-	Relay contact rating(max.) : 240VAC / 8A resistive "Short" when DIM1 output duty cycle >0 ; "Open" when DIM1 output duty cycle=0

■ Function Description of TB2

Pin No.	Function	Description
1,3,5,7	DIM+	Dimming output Connect to DIM+(Blue) line of dimmingable LED power.
2,4,6,8	DIM-	Dimming output Connect to DIM-(White) line of dimmingable LED power.

■ Function Description of JP1

Pin No.	Order Name	Function	Description
1,2	DAP-04	ACT-HI	PWM active High / Low selection. Short : Active High. Open : Active Low. Factory setting is Active High.
	DAP-04-S01	DALI Nr.	Nr. of DALI address show on DALI BUS short: 4. open: 1. Factory Setting: 4

■ Installation Manual

Please refer to : http://www.meanwell.com/search/DAP-04/DAP-04-E.pdf