DAN202

Dual Surface Mount Fast Switching Diode

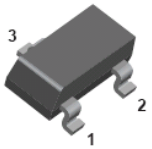

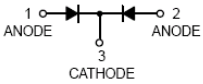

SOT-23

Features

- ✧ High speed.
- ✧ High reliability.
- ✧ Suitable for hig packing density layout.

Lead-free

Applications

- ✧ Ultra high speed switching
- ✧ Silicon epitaxial planar

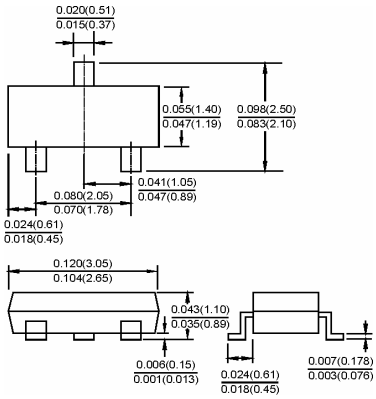

Dimensions in inches and (millimeters)

Ordering Information

Type No.	Marking	Package Code
DAN202	N	SOT-23

MAXIMUM RATING @ Ta=25℃ unless otherwise specified

Parameter	**Symbol**	**Limits**	**Unit**
Non-Repetitive Peak reverse voltage	V_{RM}	80	V
DC Reverse Voltage	V_R	80	V
Forward continuous Current(Single)	I_{FM}	300	mA
Forward continuous Current(Double)	I_{FM}	450	mA
Average rectified forward current(Single)	I_O	100	mA
Average rectified forward current(Double)	I_O	150	mA
Non-repetitive forward Surge Current @t=1.0us(Single) @t=1.0us(Double)	I_{surge}	 4 6	A
Power Dissipation	P_d	200	mW
Thermal resistance,junction to ambient air	$R_{\theta JA}$	357	℃/W
Junction temperature	T_j	150	℃
Storage temperature range	T_{stg}	-55 -+150	℃

DAN202

Dual Surface Mount Fast Switching Diode

ELECTRICAL CHARACTERISTICS @ Ta=25℃ unless otherwise specified

Parameter	Symbol	Test conditions	MIN	MAX	UNIT
Reverse voltage leakage current	I_R	V_R=70V		0.1	μA
Forward voltage	V_F	I_F=100mA		1.2	V
Total capacitance	C_T	V_R=6V,f=1MHz		3.5	pF
Reverse recovery time	t_{rr}	I_F=5mA,V_R=6V, R_L=50Ω		4	ns

TYPICAL CHARACTERISTICS @ Ta=25℃ unless otherwise specified

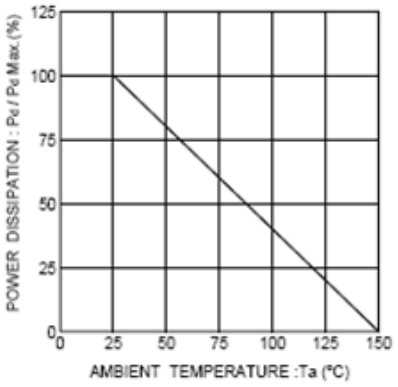

Power attenuation curve

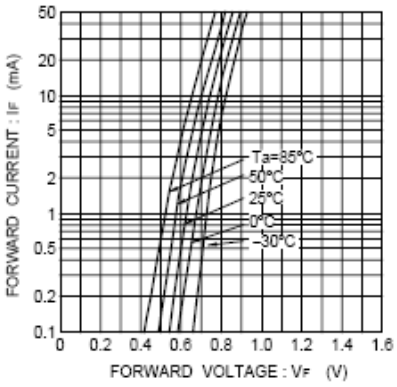

Forward characteristics

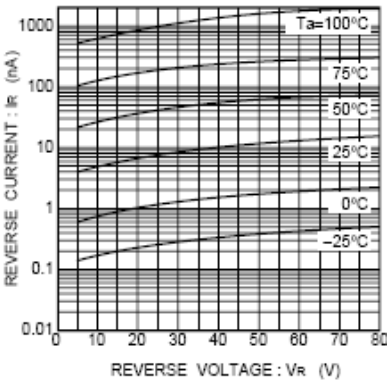

Reverse characteristics