INCORE

Digital scene switch (Push Button) Powered by DALI BUS



CE

FEATURES

- Powered by DALI Bus
- Modular Design (Compatible with Traditional Switch)
- DALI Digital Control Interface
- Direct Input Dimming Command or 103 Signal Event
- LED Indicator and Programmable Brightness
- Support Two or Multi-Switch Function
- Support Multi-Step Dimming Mode
- Comply with Global Safety Regulations
- Residential and Commercial Use

PRODUCT SPECIFICATIONS

Model		DAL003N000NNN0-00G	DAL003N000NNN1-00G	DAL003N000NNN2-00G
Output (LED Indicator)	Voltage	5V		Built-in
	Max. Current	20mA		
	Min. Current	0A		
Input	Voltage	DALI Bus Power		
	Current	3~30mA		
	Standby Power	< 0.8W		
	Button Number	1~3		
	Button Signal	3 wires with LED backlight		Built-in
	Button Lifetime	100,000 times		
Environment	Working Temp.	-30 ~ +40˚C		
	Working Humidity	20 ~ 95%		
	Storage	-40 ~ 80˚C, 10 ~ 95%		
Control Interface	DALI Interface	DALI IEC 62386-103		

Wiring

Type A;

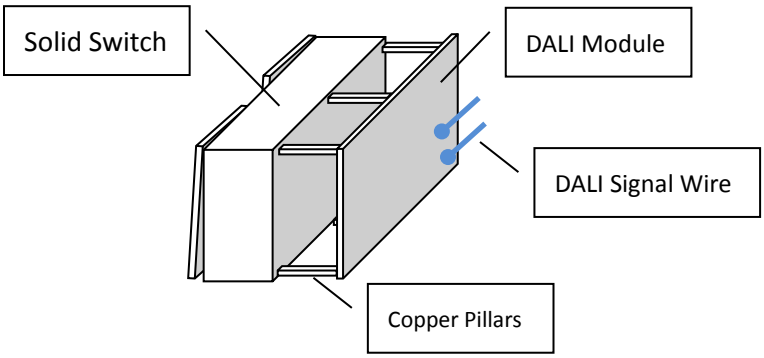

Linkcom Manufacturing Co., Ltd.
5F., No. 127, Ln. 235, Baoqiao Rd., Xindian Dist., New Taipei City 231-45, Taiwan ▪ T: +886-2-8919-1380 ▪ F: +886-2-8919-1370 ▪ www.linkcom.com.tw

Type B;

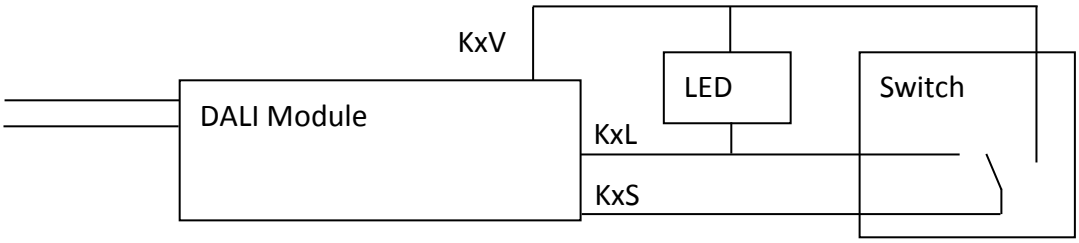

Type C;

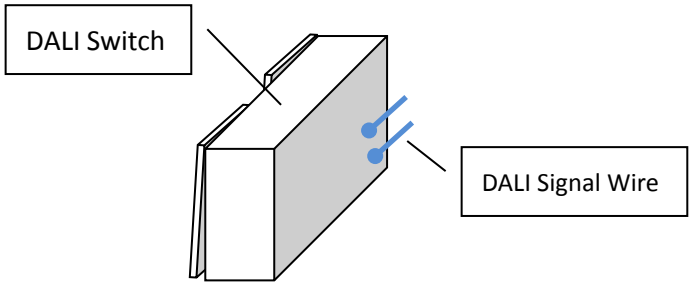

Functional Block

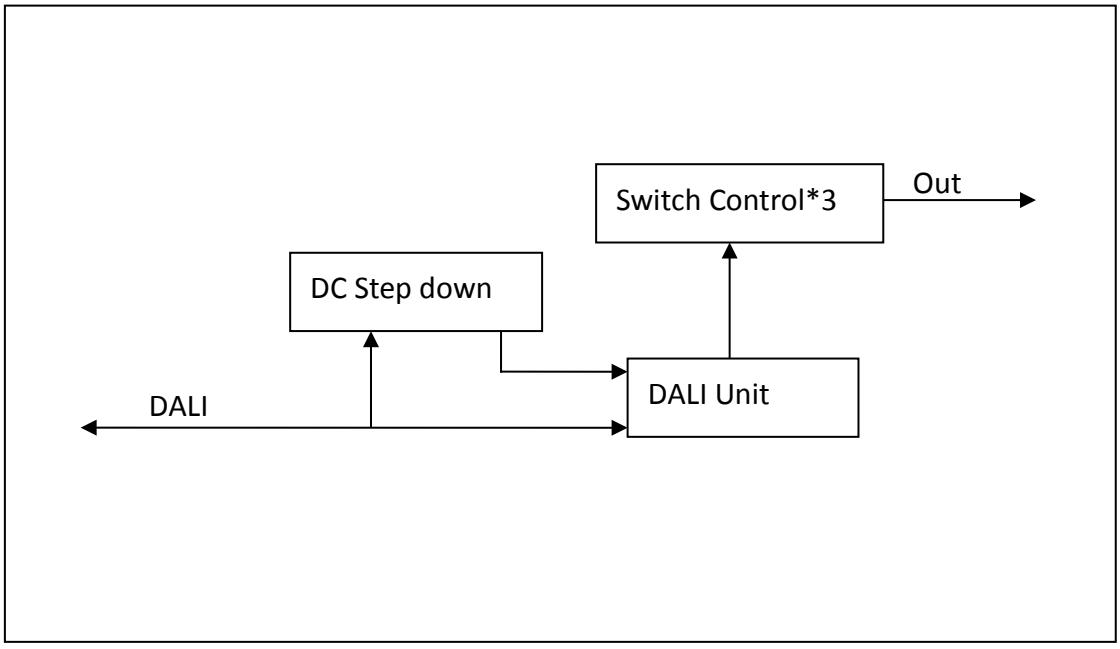

Dimensions

＊REFERENCE: www.linkcom.com.tw