Burr-Brown Products from Texas Instruments

DAC7616

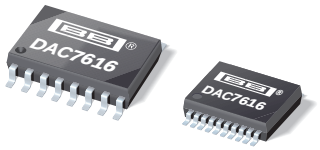

www.ti.com

Quad, Serial Input, 12-Bit, Voltage Output DIGITAL-TO-ANALOG CONVERTER

FEATURES

- LOW POWER: 3mW
- SETTLING TIME: 10μs to 0.012%
- 12-BIT LINEARITY AND MONOTONICITY: –40°C to +85°C
- USER SELECTABLE RESET TO MID-SCALE OR ZERO-SCALE
- SECOND-SOURCE for DAC8420
- SO-16 or SSOP-20 PACKAGES
- SINGLE SUPPLY +3V OPERATION

APPLICATIONS

- ATE PIN ELECTRONICS
- PROCESS CONTROL
- CLOSED-LOOP SERVO-CONTROL
- MOTOR CONTROL
- DATA ACQUISITION SYSTEMS
- DAC-PER-PIN PROGRAMMERS

DESCRIPTION

The DAC7616 is a quad, serial input, 12-bit, voltage output Digital-to-Analog Converter (DAC) with guaranteed 12-bit monotonic performance over the –40°C to +85°C temperature range. An asynchronous reset clears all registers to either mid-scale (800_H) or zero-scale (000_H), selectable via the RESETSEL pin. The device is powered from a single +3V supply.

Low power and small size makes the DAC7616 ideal for process control, data acquisition systems, and closed-loop servo-control. The device is available in SO-16 or SSOP-20 packages, and is guaranteed over the –40°C to +85°C temperature range.

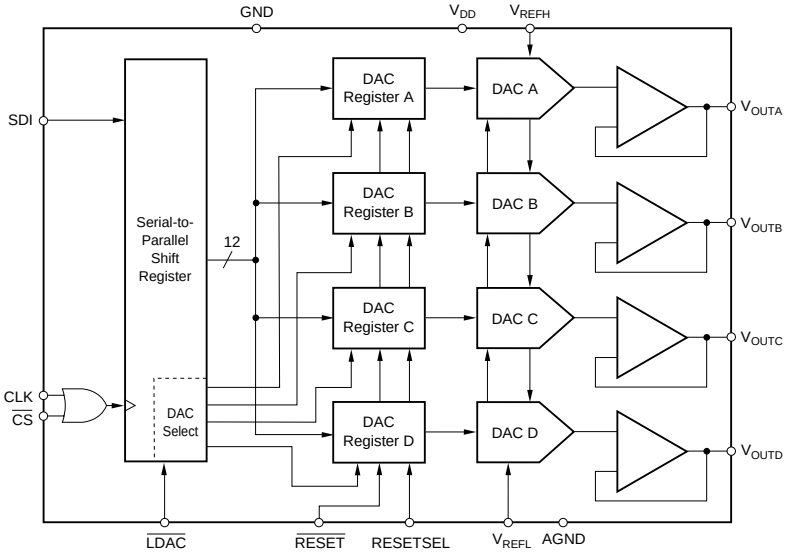

Copyright © 2001, Texas Instruments Incorporated

Printed in U.S.A. February, 2001

SPECIFICATIONS

At T_A = –40°C to +85°C, V_{DD} = +3V, V_{REFH} = +1.25V, and V_{REFL} = 0V, unless otherwise noted.

PARAMETER	CONDITIONS	DAC7616E, U			DAC7616EB, UB			UNITS
		MIN	TYP	MAX	MIN	TYP	MAX	
ACCURACY								
Linearity Error[1]				±2			±1	LSB[2]
Linearity Matching[3]				±2			±1	LSB
Differential Linearity Error				±1			±1	LSB
Monotonicity		12			*			Bits
Zero-Scale Error	Code = $00A_H$			±2.4			*	mV
Zero-Scale Drift			5	10		*	*	ppm/°C
Zero-Scale Matching[3]			±1	±2		*	±1.2	mV
Full-Scale Error	Code = FFF_H			±2.4			*	mV
Full-Scale Matching[3]			±1	±2		*	±1.2	mV
Power Supply Rejection			30			*		ppm/V
ANALOG OUTPUT								
Voltage Output[4]		V_{REFL}		V_{REFH}	*		*	V
Output Current		–625		+625	*		*	µA
Load Capacitance	No Oscillation		100			*		pF
Short-Circuit Current			+8, –2			*		mA
Short-Circuit Duration			Indefinite			*		
REFERENCE INPUT								
V_{REFH} Input Range		0		+1.25	*		*	V
V_{REFL} Input Range		0			*			V
DYNAMIC PERFORMANCE								
Settling Time	To ±0.012%		5	10		*	*	µs
Channel-to-Channel Crosstalk	Full-Scale Step On Any Other DAC		0.1			*		LSB
Output Noise Voltage	Bandwidth: 0Hz to 1MHz		65			*		nV/$\sqrt{Hz}$
DIGITAL INPUT/OUTPUT								
Logic Family			CMOS			*		
Logic Levels								
V_{IH}	$\lvert I_{IH} \rvert \leq 10\mu A$	V_{DD} • 0.7		V_{DD}	*		*	V
V_{IL}	$\lvert I_{IL} \rvert \leq 10\mu A$	–0.3		V_{DD} • 0.3	*		*	V
Data Format			Straight Binary			*		
POWER SUPPLY REQUIREMENTS								
V_{DD}		3.0	3.3	3.6	*	*	*	V
I_{DD}			0.8	1		*	*	mA
Power Dissipation			2.4	3		*	*	mW
TEMPERATURE RANGE								
Specified Performance		–40		+85	*		*	°C

* Specification same as DAC7616E, U.

NOTES: (1) Specification applies at code $00A_H$ and above. (2) LSB means Least Significant Bit, with V_{REFH} equal to +1.25V and V_{REFL} equal to 0V, one LSB is 0.305mV. (3) All DAC outputs will match within the specified error band. (4) Ideal output voltage does not take into account zero or full-scale error.

ABSOLUTE MAXIMUM RATINGS[1]

V_{DD} to GND	–0.3V to +5.5V
V_{REFL} to GND	–0.3V to (V_{DD} + 0.3V)
V_{DD} to V_{REFH}	–0.3V to V_{DD}
V_{REFH} to V_{REFL}	–0.3V to V_{DD}
Digital Input Voltage to GND	–0.3V to V_{DD} + 0.3V
Maximum Junction Temperature	+150°C
Operating Temperature Range	–40°C to +85°C
Storage Temperature Range	–65°C to +150°C
Lead Temperature (soldering, 10s)	+300°C

NOTE: (1) Stresses above those listed under "Absolute Maximum Ratings" may cause permanent damage to the device. Exposure to absolute maximum conditions for extended periods may affect device reliability.

ELECTROSTATIC DISCHARGE SENSITIVITY

This integrated circuit can be damaged by ESD. Texas Instruments recommends that all integrated circuits be handled with appropriate precautions. Failure to observe proper handling and installation procedures can cause damage.

ESD damage can range from subtle performance degradation to complete device failure. Precision integrated circuits may be more susceptible to damage because very small parametric changes could cause the device not to meet its published specifications.

PACKAGE/ORDERING INFORMATION

PRODUCT	MAXIMUM LINEARITY ERROR (LSB)	MAXIMUM DIFFERENTIAL LINEARITY (LSB)	PACKAGE	PACKAGE DRAWING NUMBER	SPECIFICATION TEMPERATURE RANGE	ORDERING NUMBER[1]	TRANSPORT MEDIA
DAC7616U	±2	±1	SO-16	211	–40°C to +85°C	DAC7616U	Rails
"	"	"	"	"	"	DAC7616U/1K	Tape and Reel
DAC7616UB	±1	±1	SO-16	211	–40°C to +85°C	DAC7616UB	Rails
"	"	"	"	"	"	DAC7616UB/1K	Tape and Reel
DAC7616E	±2	±1	SSOP-20	334	–40°C to +85°C	DAC7616E	Rails
"	"	"	"	"	"	DAC7616E/1K	Tape and Reel
DAC7616EB	±1	±1	SSOP-20	334	–40°C to +85°C	DAC7616EB	Rails
"	"	"	"	"	"	DAC7616EB/1K	Tape and Reel

NOTES: (1) Models with a slash (/) are available only in Tape and Reel in the quantities indicated (e.g., /1K indicates 1000 devices per reel). Ordering 1000 pieces of "DAC7616EB/1K" will get a single 1000-piece Tape and Reel.

PIN CONFIGURATION—U Package

Top View SO

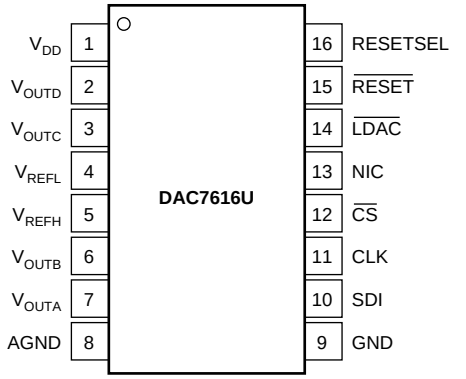

PIN CONFIGURATION—E Package

Top View SSOP

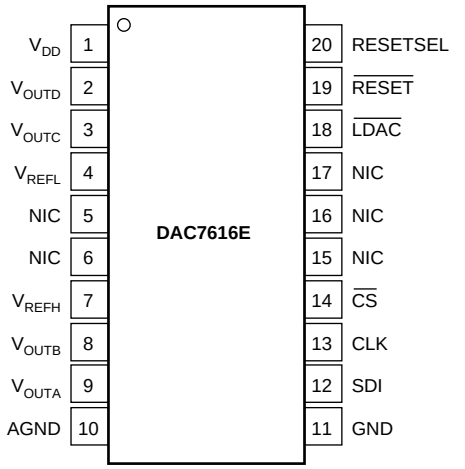

PIN DESCRIPTIONS—U Package

PIN	LABEL	DESCRIPTION
1	V_{DD}	Positive Analog Supply Voltage, +3V nominal.
2	V_{OUTD}	DAC D Voltage Output
3	V_{OUTC}	DAC C Voltage Output
4	V_{REFL}	Reference Input Voltage Low. Sets minimum output voltage for all DACs.
5	V_{REFH}	Reference Input Voltage High. Sets maximum output voltage for all DACs.
6	V_{OUTB}	DAC B Voltage Output
7	V_{OUTA}	DAC A Voltage Output
8	AGND	Analog Ground
9	GND	Ground
10	SDI	Serial Data Input
11	CLK	Serial Data Clock
12	$\overline{CS}$	Chip Select Input
13	NIC	Not Internally Connected.
14	$\overline{LDAC}$	The selected DAC register becomes transparent when $\overline{LDAC}$ is LOW. It is in the latched state when $\overline{LDAC}$ is HIGH.
15	$\overline{RESET}$	Asynchronous Reset Input. Sets all DAC registers to either zero-scale (000_H) or mid-scale (800_H) when LOW. RESETSEL determines which code is active.
16	RESETSEL	When LOW, a LOW on $\overline{RESET}$ will cause all DAC registers to be set to code 000_H. When RESETSEL is HIGH, a LOW on $\overline{RESET}$ will set the registers to code 800_H.

PIN DESCRIPTIONS—E Package

PIN	LABEL	DESCRIPTION
1	V_{DD}	Positive Analog Supply Voltage, +3V nominal.
2	V_{OUTD}	DAC D Voltage Output
3	V_{OUTC}	DAC C Voltage Output
4	V_{REFL}	Reference Input Voltage Low. Sets minimum output voltage for all DACs.
5	NIC	Not Internally Connected.
6	NIC	Not Internally Connected.
7	V_{REFH}	Reference Input Voltage High. Sets maximum output voltage for all DACs.
8	V_{OUTB}	DAC B Voltage Output.
9	V_{OUTA}	DAC A Voltage Output.
10	AGND	Analog Ground
11	GND	Ground
12	SDI	Serial Data Input
13	CLK	Serial Data Clock
14	$\overline{CS}$	Chip Select Input
15	NIC	Not Internally Connected.
16	NIC	Not Internally Connected.
17	NIC	Not Internally Connected.
18	$\overline{LDAC}$	The selected DAC register becomes transparent when $\overline{LDAC}$ is LOW. It is in the latched state when $\overline{LDAC}$ is HIGH.
19	$\overline{RESET}$	Asynchronous Reset Input. Sets all DAC registers to either zero-scale (000_H) or mid-scale (800_H) when LOW. RESETSEL determines which code is active.
20	RESETSEL	When LOW, a LOW on $\overline{RESET}$ will cause all DAC registers to be set to code 000_H. When RESETSEL is HIGH, a LOW on $\overline{RESET}$ will set the registers to code 800_H.

TYPICAL PERFORMANCE CURVES

At T_A = +25°C, V_{DD} = +3V, V_{REFH} = +1.25V, and V_{REFL} = 0V, representative unit, unless otherwise specified.

LINEARITY ERROR AND
DIFFERENTIAL LINEARITY ERROR vs CODE
(DAC A, +25°C)

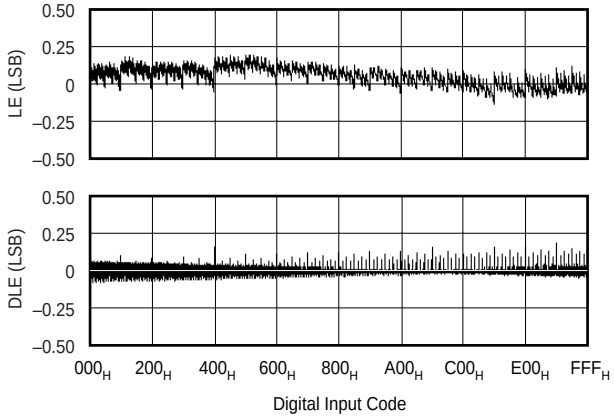

LINEARITY ERROR AND
DIFFERENTIAL LINEARITY ERROR vs CODE
(DAC A, +85°C)

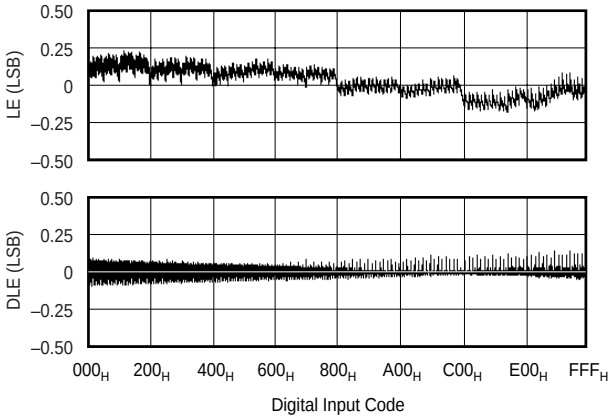

LINEARITY ERROR AND
DIFFERENTIAL LINEARITY ERROR vs CODE
(DAC A, –40°C)

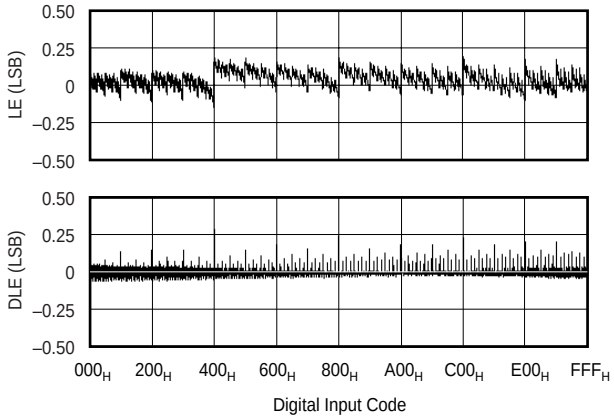

LINEARITY ERROR AND
DIFFERENTIAL LINEARITY ERROR vs CODE
(DAC B, +25°C)

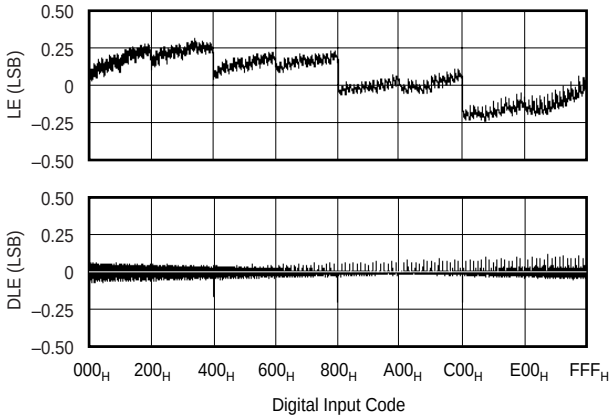

LINEARITY ERROR AND
DIFFERENTIAL LINEARITY ERROR vs CODE
(DAC B, +85°C)

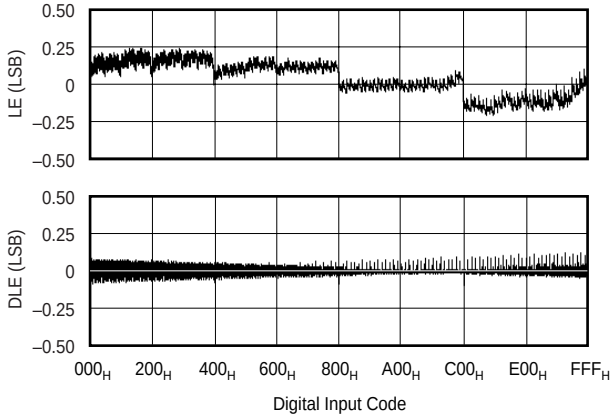

LINEARITY ERROR AND
DIFFERENTIAL LINEARITY ERROR vs CODE
(DAC B, –40°C)

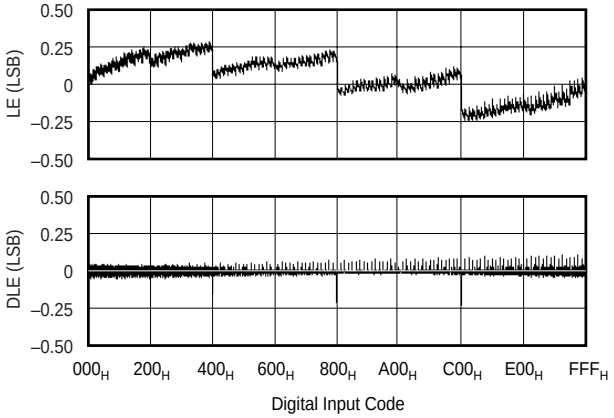

TYPICAL PERFORMANCE CURVES

At T_A = +25°C, V_{DD} = +3V, V_{REFH} = +1.25V, and V_{REFL} = 0V, representative unit, unless otherwise specified.

LINEARITY ERROR AND
DIFFERENTIAL LINEARITY ERROR vs CODE
(DAC C, +25°C)

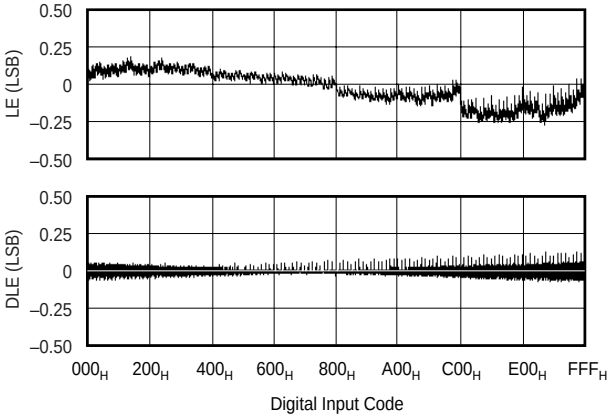

LINEARITY ERROR AND
DIFFERENTIAL LINEARITY ERROR vs CODE
(DAC C, +85°C)

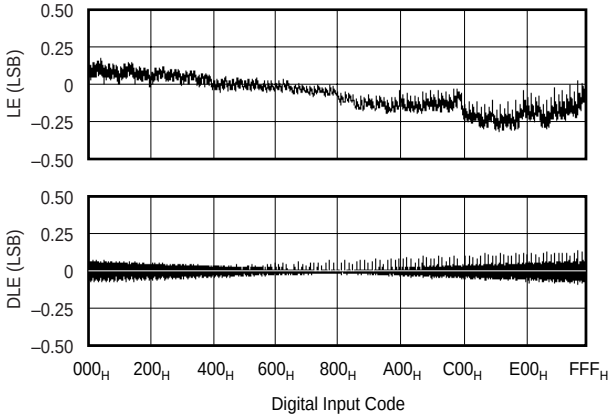

LINEARITY ERROR AND
DIFFERENTIAL LINEARITY ERROR vs CODE
(DAC C, –40°C)

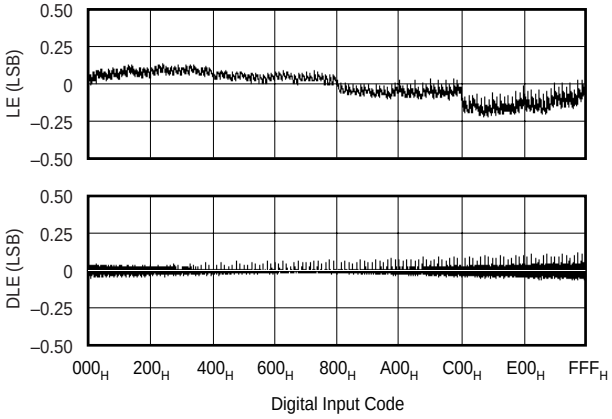

LINEARITY ERROR AND
DIFFERENTIAL LINEARITY ERROR vs CODE
(DAC D, +25°C)

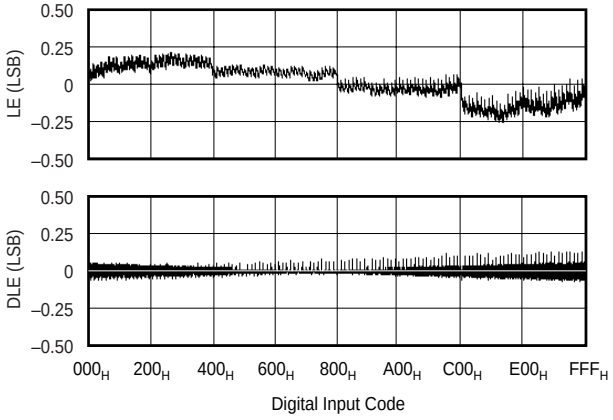

LINEARITY ERROR AND
DIFFERENTIAL LINEARITY ERROR vs CODE
(DAC D, +85°C)

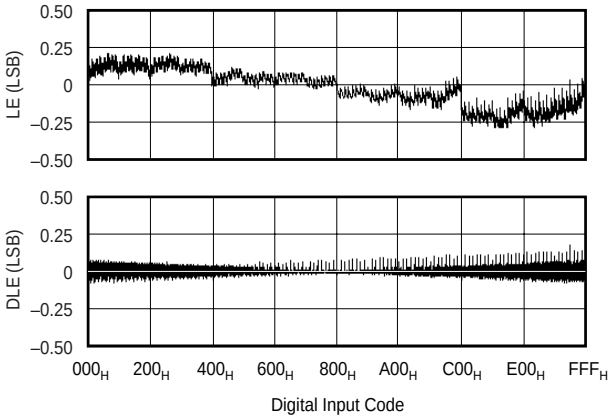

LINEARITY ERROR AND
DIFFERENTIAL LINEARITY ERROR vs CODE
(DAC D, –40°C)

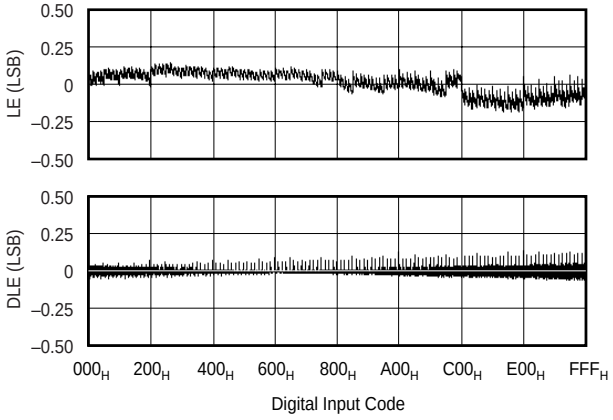

TYPICAL PERFORMANCE CURVES

At T_A = +25°C, V_{DD} = +3V, V_{REFH} = +1.25V, and V_{REFL} = 0V, representative unit, unless otherwise specified.

NEGATIVE FULL-SCALE ERROR vs TEMPERATURE

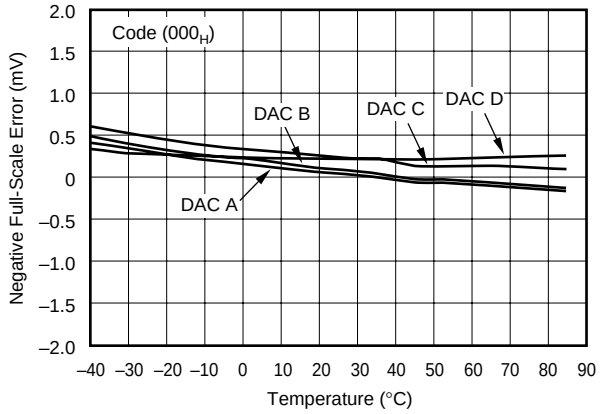

POSITIVE FULL-SCALE ERROR vs TEMPERATURE

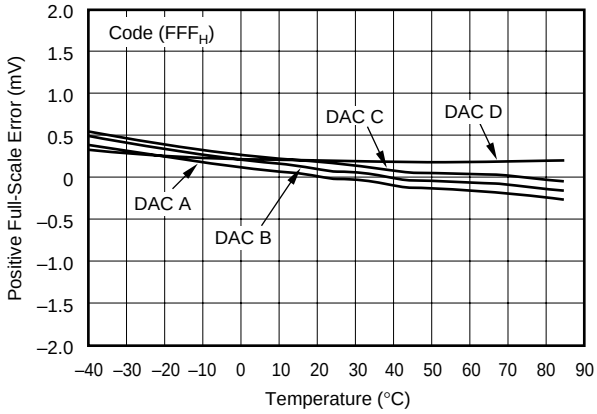

V_{REFL} CURRENT vs CODE

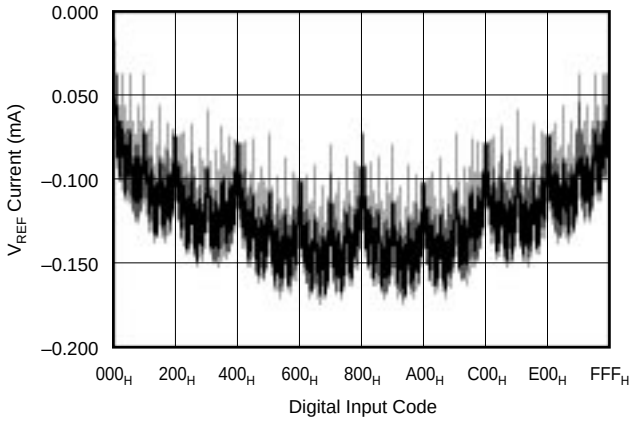

V_{REFH} CURRENT vs CODE

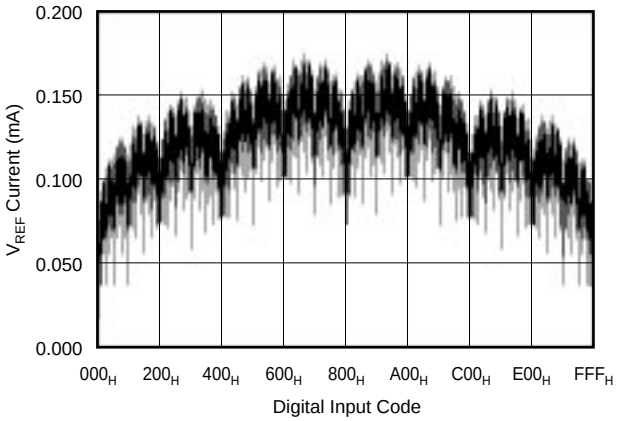

SUPPLY CURRENT vs DIGITAL INPUT CODE

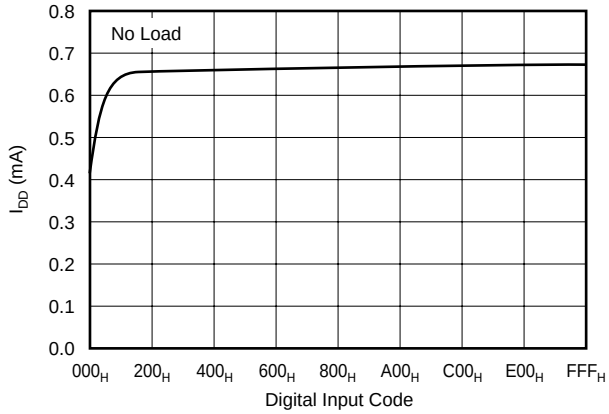

SUPPLY CURRENT LIMIT vs INPUT CODE

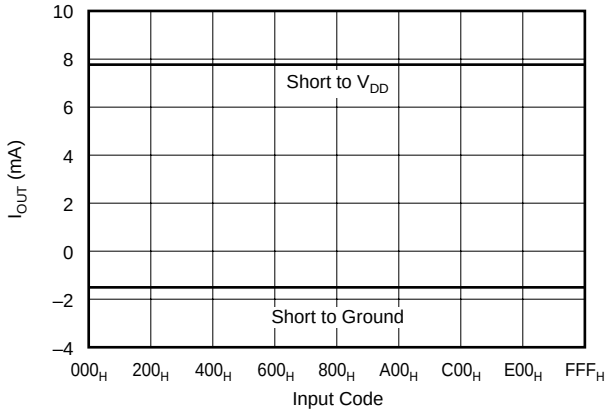

TYPICAL PERFORMANCE CURVES

At T_A = +25°C, V_{DD} = +3V, V_{REFH} = +1.25V, and V_{REFL} = 0V, representative unit, unless otherwise specified.

POWER SUPPLY CURRENT vs TEMPERATURE

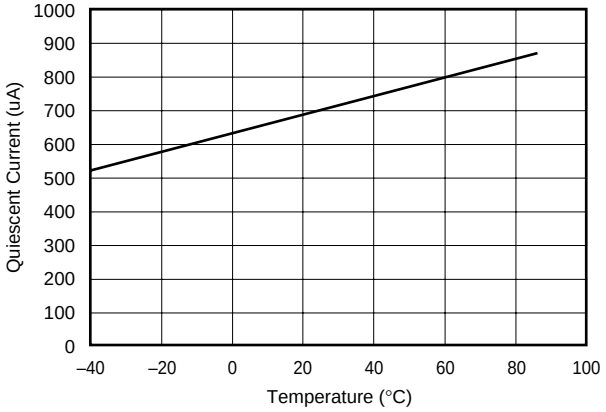

OUTPUT VOLTAGE vs R_{LOAD}

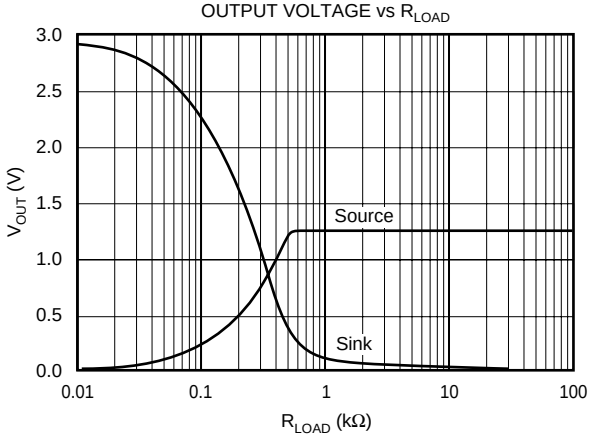

OUTPUT VOLTAGE vs SETTLING TIME
(0V to +1.25V)

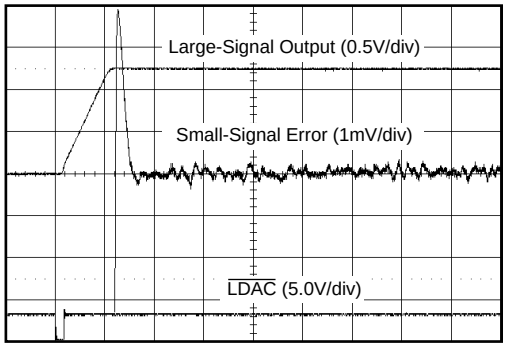

Time (2µs/div)

OUTPUT VOLTAGE vs SETTLING TIME
(+1.25V to 0V)

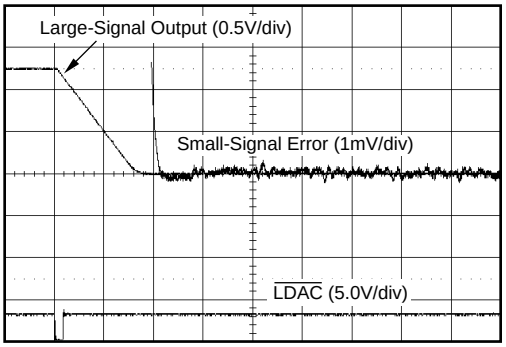

Time (2µs/div)

MID-SCALE GLITCH PERFORMANCE
(CODE $7FF_H$ to 800_H)

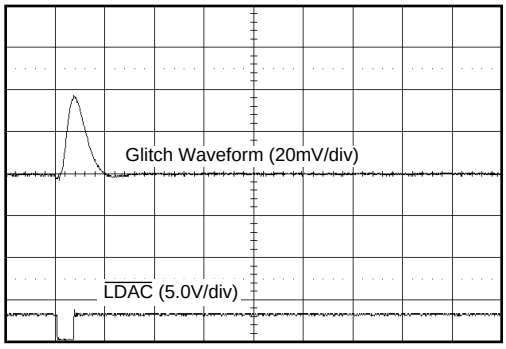

Time (1µs/div)

MID-SCALE GLITCH PERFORMANCE
(CODE 800_H to $7FF_H$)

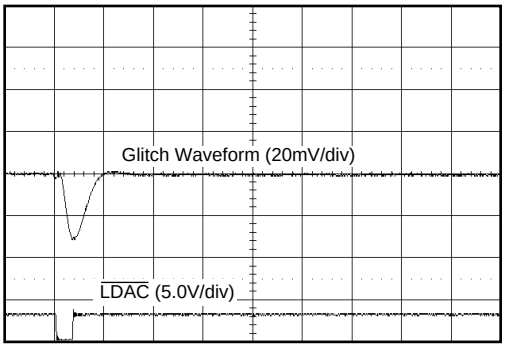

Time (1µs/div)

TYPICAL PERFORMANCE CURVES

At T_A = +25°C, V_{DD} = +3V, V_{REFH} = +1.25V, and V_{REFL} = 0V, representative unit, unless otherwise specified.

WIDEBAND NOISE
(Bandwidth = 10kHz)

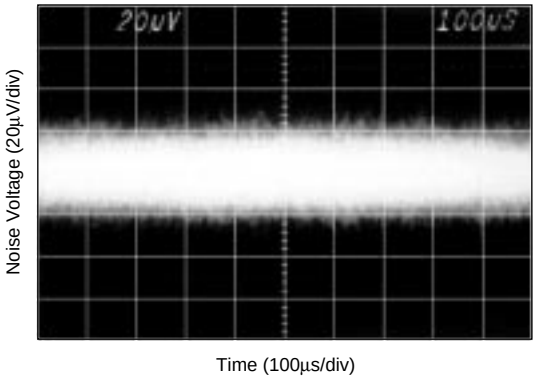

OUTPUT NOISE VOLTAGE vs FREQUENCY

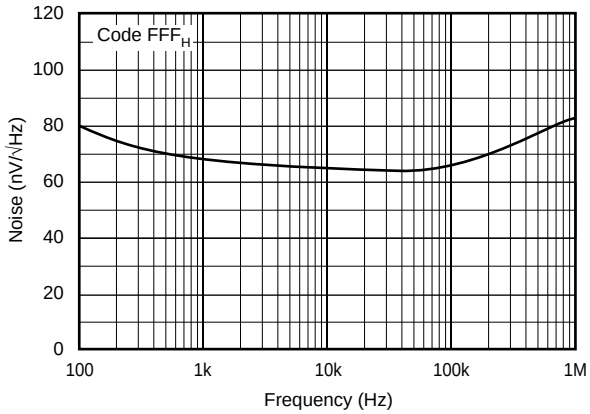

THEORY OF OPERATION

The DAC7616 is a quad, serial input, 12-bit, voltage output DAC. The architecture is a classic R-2R ladder configuration followed by an operational amplifier that serves as a buffer. Each DAC has its own R-2R ladder network and output op amp, but all share the reference voltage inputs. The minimum voltage output ("zero-scale") and maximum voltage output ("full-scale") are set by external voltage references (V_{REFL} and V_{REFH}, respectively). The digital input is a 16-bit serial word that contains the 12-bit DAC code and a 2-bit address code that selects one of the four DACs (the two remaining bits are unused). The converter can be powered from a single +3V supply. Each device offers a reset function which immediately sets all DAC output voltages and internal registers to either zero-scale (code 000_H) or mid-scale (code 800_H). The reset code is selected by the state of the RESETSEL pin (LOW = 000_H, HIGH = 800_H). See Figure 1 for the basic operation of the DAC7616.

ANALOG OUTPUTS

The output of the DAC7616 can swing to ground. Note that the settling time of the output op amp will be longer with voltages very near ground. Also, care must be taken when measuring the zero-scale error. If the output amplifier has a negative offset, the output voltage may not change for the first few digital input codes (000_H, 001_H, 002_H, etc.) since the output voltage cannot swing below ground.

The behavior of the output amplifier can be critical in some applications. Under short-circuit conditions (DAC output shorted to V_{DD}), the output amplifier can sink more current than it can source. See the Specifications table for more details concerning short-circuit current.

REFERENCE INPUTS

The minimum output of each DAC is equal to V_{REFL} plus a small offset voltage (essentially, the offset of the output op amp). The maximum output is equal to V_{REFH} – 1LSB plus a similar offset voltage.

The current into the reference inputs depends on the DAC output voltages and can vary from a few microamps to approximately 0.4 milliamp. Bypassing the reference voltage or voltages with a 0.1µF capacitor placed as close as possible to the DAC7616 package is strongly recommended.

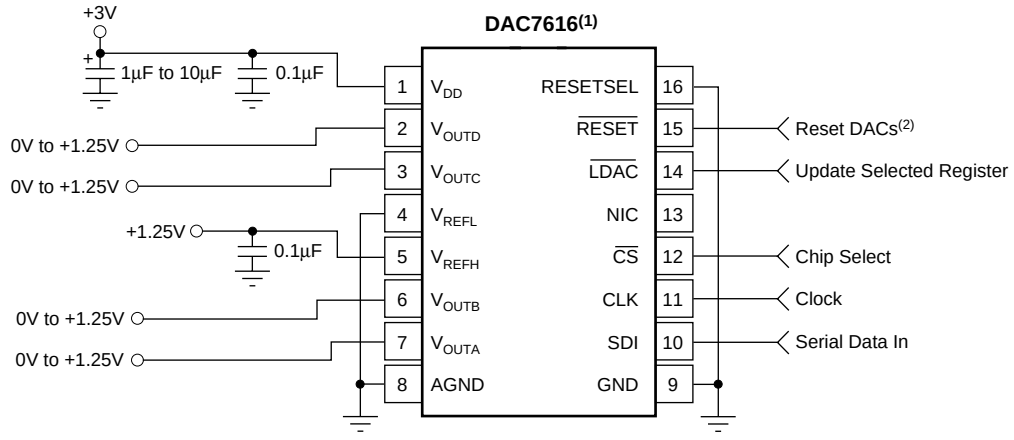

NOTES: (1) U package pin configuration shown. (2) As configured, $\overline{\text{RESET}}$ LOW sets all internal registers to code 000_H (0V). If RESETSEL is HIGH, $\overline{\text{RESET}}$ LOW sets all internal registers to code 800_H (1.25V).

FIGURE 1. Basic Single-Supply Operation of the DAC7616.

DIGITAL INTERFACE

Figure 2 and Table I provide the basic timing for the DAC7616. The interface consists of a serial clock (CLK), serial data (SDI), and a load DAC signal ($\overline{LDAC}$). In addition, a chip select ($\overline{CS}$) input is available to enable serial communication when there are multiple serial devices. An asynchronous reset input ($\overline{RESET}$) is provided to simplify start-up conditions, periodic resets, or emergency resets to a known state.

SYMBOL	DESCRIPTION	MIN	TYP	MAX	UNITS
t_{DS}	Data Valid to CLK Rising	25			ns
t_{DH}	Data Held Valid after CLK Rises	20			ns
t_{CH}	CLK HIGH	30			ns
t_{CL}	CLK LOW	50			ns
t_{CSS}	$\overline{CS}$ LOW to CLK Rising	55			ns
t_{CSH}	CLK HIGH to $\overline{CS}$ Rising	15			ns
t_{LD1}	$\overline{LDAC}$ HIGH to CLK Rising	40			ns
t_{LD2}	CLK Rising to $\overline{LDAC}$ LOW	15			ns
t_{LDDW}	$\overline{LDAC}$ LOW Time	45			ns
t_{RSSH}	RESETSEL Valid to $\overline{RESET}$ LOW	25			ns
t_{RSTW}	$\overline{RESET}$ LOW Time	70			ns
t_S	Settling Time	10			µs

TABLE I. Timing Specifications (T_A = –40°C to +85°C).

The DAC code and address are provided via a 16-bit serial interface as shown in Figure 2. The first two bits select the DAC register that will be updated when $\overline{LDAC}$ goes LOW (see Table II). The next two bits are not used. The last 12 bits is the DAC code which is provided, most significant bit first.

Note that $\overline{CS}$ and CLK are combined with an OR gate, whose output controls the serial-to-parallel shift register internal to the DAC7616 (see the block diagram on the front of this data sheet). These two inputs are completely interchangeable. In addition, care must be taken with the state of CLK when $\overline{CS}$ rises at the end of a serial transfer. If CLK is LOW when $\overline{CS}$ rises, the OR gate will provide a rising edge to the shift register, shifting the internal data one additional bit. The result will be incorrect data and possible selection of the wrong DAC.

A1	A0	$\overline{LDAC}$	$\overline{RESET}$	SELECTED DAC REGISTER	STATE OF SELECTED DAC REGISTER
L(1)	L	L	H	A	Transparent
L	H	L	H	B	Transparent
H	L	L	H	C	Transparent
H	H	L	H	D	Transparent
X(2)	X	H	H	NONE	(All Latched)
X	X	X	L	ALL	Reset(3)

NOTES: (1) L = Logic LOW. (2) X = Don't Care. (3) Resets to either 000H or 800_H, per the RESETSEL state (LOW = 000_H, HIGH = 800_H). When $\overline{RESET}$ rises, all registers that are in their latched state retain the reset value.

TABLE II. Control Logic Truth Table.

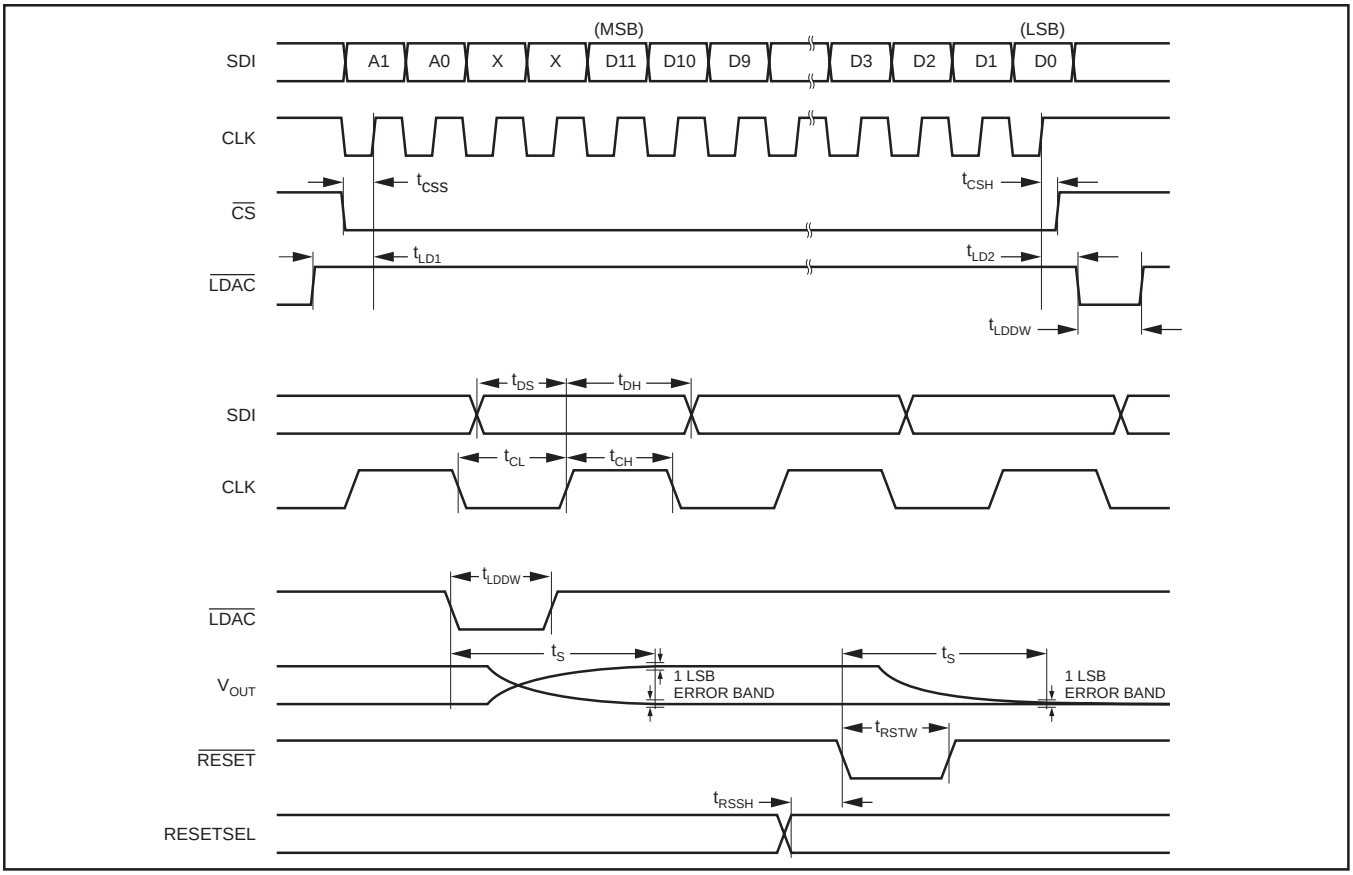

FIGURE 2. DAC7616 Timing.

If both $\overline{CS}$ and CLK are used, then $\overline{CS}$ should rise only when CLK is HIGH. If not, then either $\overline{CS}$ or CLK can be used to operate the shift register. See Table III for more information.

$\overline{CS}$(1)	CLK(1)	$\overline{LDAC}$	$\overline{RESET}$	SERIAL SHIFT REGISTER
H(2)	X(3)	H	H	No Change
L(4)	L	H	H	No Change
L	↑(5)	H	H	Advanced One Bit
↑	L	H	H	Advanced One Bit
H(6)	X	L(7)	H	No Change
H(6)	X	H	L(8)	No Change

NOTES: (1) $\overline{CS}$ and CLK are interchangeable. (2) H = Logic HIGH. (3) X = Don't Care. (4) L = Logic LOW (5) = Positive Logic Transition. (6) A HIGH value is suggested in order to avoid a "false clock" from advancing the shift register and changing the shift register. (7) If data is clocked into the serial register while $\overline{LDAC}$ is LOW, the selected DAC register will change as the shift register bits "flow" through A1 and A0. This will corrupt the data in each DAC register that has been erroneously selected. (8) $\overline{RESET}$ LOW causes no change in the contents of the serial shift register.

TABLE III. Serial Shift Register Truth Table.

Digital Input Coding

The DAC7616 input data is in Straight Binary format. The output voltage is given by the following equation:

$$V_{OUT} = V_{REFL} + \frac{(V_{REFH} - V_{REFL}) \bullet N}{4096}$$

where N is the digital input code (in decimal). This equation does not include the effects of offset (zero-scale) or gain (full-scale) errors.

LAYOUT

A precision analog component requires careful layout, adequate bypassing, and clean, well-regulated power supplies. As the DAC7616 offers single-supply operation, it will often be used in close proximity with digital logic, microcontrollers, microprocessors, and digital signal processors. The more digital logic present in the design and the higher the switching speed, the more difficult it will be to keep digital noise from appearing at the converter output.

Because the DAC7616 has a single ground pin, all return currents, including digital and analog return currents, must flow through the GND pin. Ideally, GND should be connected directly to an analog ground plane. This plane should be separate from the ground connection for the digital components until they were connected at the power entry point of the system (see Figure 3).

The power applied to V_{DD} should be well regulated and low noise. Switching power supplies and DC/DC converters will often have high-frequency glitches or spikes riding on the output voltage. In addition, digital components can create similar high-frequency spikes as their internal logic switches states. This noise can easily couple into the DAC output voltage through various paths between the power connections and analog output.

As with the GND connection, V_{DD} should be connected to a +3V power supply plane or trace that is separate from the connection for digital logic until they are connected at the power entry point. In addition, the 1µF to 10µF and 0.1µF capacitors shown in Figure 4 are strongly recommended. In some situations, additional bypassing may be required, such as a 100µF electrolytic capacitor or even a "Pi" filter made up of inductors and capacitors—all designed to essentially lowpass filter the +3V supply, removing the high frequency noise (see Figure 3).

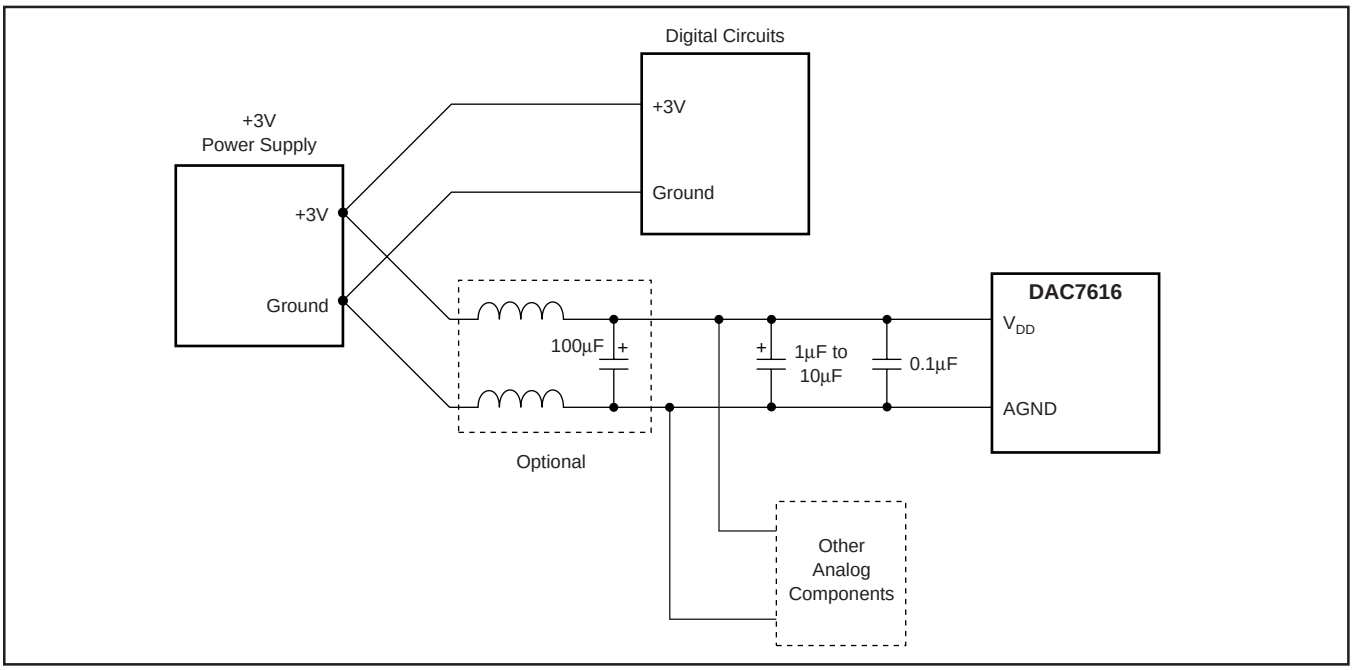

FIGURE 3. Suggested Power and Ground Connections for a DAC7616 Sharing a +3V Supply with a Digital System.

PACKAGING INFORMATION

Orderable Device	Status (1)	Package Type	Package Drawing	Pins	Package Qty	Eco Plan (2)	Lead/Ball Finish (6)	MSL Peak Temp (3)	Op Temp (°C)	Device Marking (4/5)	Samples
DAC7616EB	ACTIVE	SSOP	DB	20	70	Green (RoHS & no Sb/Br)	NIPDAU	Level-3-260C-168 HR	-40 to 85	DAC7616E B	Samples
DAC7616UB	ACTIVE	SOIC	DW	16	40	Green (RoHS & no Sb/Br)	NIPDAU	Level-3-260C-168 HR	-40 to 85	DAC7616U B	Samples
DAC7616UB/1K	ACTIVE	SOIC	DW	16	1000	Green (RoHS & no Sb/Br)	NIPDAU	Level-3-260C-168 HR	-40 to 85	DAC7616U B	Samples
DAC7616UBG4	ACTIVE	SOIC	DW	16	40	Green (RoHS & no Sb/Br)	NIPDAU	Level-3-260C-168 HR	-40 to 85	DAC7616U B	Samples

(1) The marketing status values are defined as follows:
ACTIVE: Product device recommended for new designs.
LIFEBUY: TI has announced that the device will be discontinued, and a lifetime-buy period is in effect.
NRND: Not recommended for new designs. Device is in production to support existing customers, but TI does not recommend using this part in a new design.
PREVIEW: Device has been announced but is not in production. Samples may or may not be available.
OBSOLETE: TI has discontinued the production of the device.

(2) **RoHS:** TI defines "RoHS" to mean semiconductor products that are compliant with the current EU RoHS requirements for all 10 RoHS substances, including the requirement that RoHS substance do not exceed 0.1% by weight in homogeneous materials. Where designed to be soldered at high temperatures, "RoHS" products are suitable for use in specified lead-free processes. TI may reference these types of products as "Pb-Free".
RoHS Exempt: TI defines "RoHS Exempt" to mean products that contain lead but are compliant with EU RoHS pursuant to a specific EU RoHS exemption.
Green: TI defines "Green" to mean the content of Chlorine (Cl) and Bromine (Br) based flame retardants meet JS709B low halogen requirements of <=1000ppm threshold. Antimony trioxide based flame retardants must also meet the <=1000ppm threshold requirement.

(3) MSL, Peak Temp. - The Moisture Sensitivity Level rating according to the JEDEC industry standard classifications, and peak solder temperature.

(4) There may be additional marking, which relates to the logo, the lot trace code information, or the environmental category on the device.

(5) Multiple Device Markings will be inside parentheses. Only one Device Marking contained in parentheses and separated by a "~" will appear on a device. If a line is indented then it is a continuation of the previous line and the two combined represent the entire Device Marking for that device.

(6) Lead/Ball Finish - Orderable Devices may have multiple material finish options. Finish options are separated by a vertical ruled line. Lead/Ball Finish values may wrap to two lines if the finish value exceeds the maximum column width.

Important Information and Disclaimer: The information provided on this page represents TI's knowledge and belief as of the date that it is provided. TI bases its knowledge and belief on information provided by third parties, and makes no representation or warranty as to the accuracy of such information. Efforts are underway to better integrate information from third parties. TI has taken and

continues to take reasonable steps to provide representative and accurate information but may not have conducted destructive testing or chemical analysis on incoming materials and chemicals.
TI and TI suppliers consider certain information to be proprietary, and thus CAS numbers and other limited information may not be available for release.

In no event shall TI's liability arising out of such information exceed the total purchase price of the TI part(s) at issue in this document sold by TI to Customer on an annual basis.

TAPE AND REEL INFORMATION

REEL DIMENSIONS

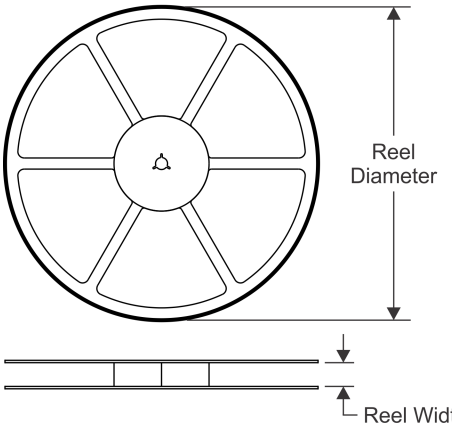

TAPE DIMENSIONS

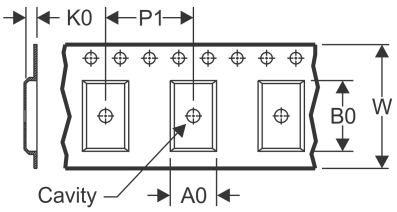

A0	Dimension designed to accommodate the component width
B0	Dimension designed to accommodate the component length
K0	Dimension designed to accommodate the component thickness
W	Overall width of the carrier tape
P1	Pitch between successive cavity centers

QUADRANT ASSIGNMENTS FOR PIN 1 ORIENTATION IN TAPE

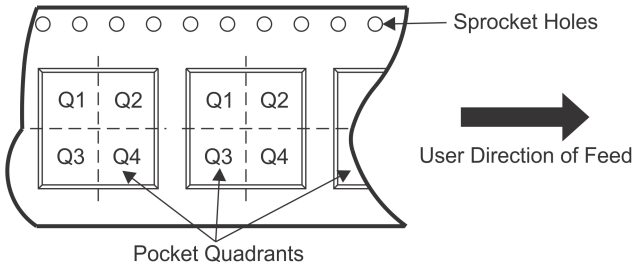

*All dimensions are nominal

Device	Package Type	Package Drawing	Pins	SPQ	Reel Diameter (mm)	Reel Width W1 (mm)	A0 (mm)	B0 (mm)	K0 (mm)	P1 (mm)	W (mm)	Pin1 Quadrant
DAC7616UB/1K	SOIC	DW	16	1000	330.0	16.4	10.75	10.7	2.7	12.0	16.0	Q1

TAPE AND REEL BOX DIMENSIONS

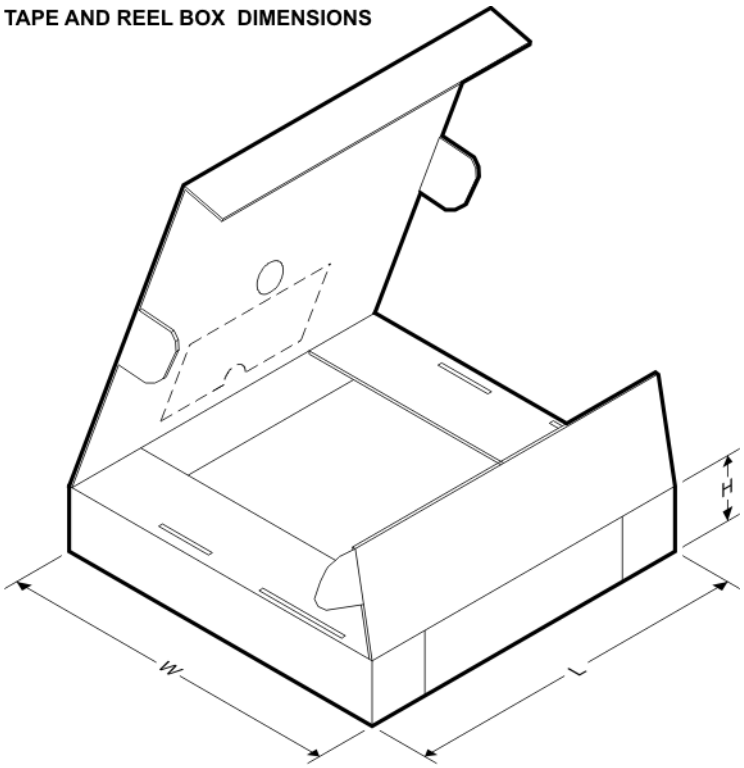

*All dimensions are nominal

Device	Package Type	Package Drawing	Pins	SPQ	Length (mm)	Width (mm)	Height (mm)
DAC7616UB/1K	SOIC	DW	16	1000	350.0	350.0	43.0

IMPORTANT NOTICE AND DISCLAIMER

TI PROVIDES TECHNICAL AND RELIABILITY DATA (INCLUDING DATASHEETS), DESIGN RESOURCES (INCLUDING REFERENCE DESIGNS), APPLICATION OR OTHER DESIGN ADVICE, WEB TOOLS, SAFETY INFORMATION, AND OTHER RESOURCES “AS IS” AND WITH ALL FAULTS, AND DISCLAIMS ALL WARRANTIES, EXPRESS AND IMPLIED, INCLUDING WITHOUT LIMITATION ANY IMPLIED WARRANTIES OF MERCHANTABILITY, FITNESS FOR A PARTICULAR PURPOSE OR NON-INFRINGEMENT OF THIRD PARTY INTELLECTUAL PROPERTY RIGHTS.

These resources are intended for skilled developers designing with TI products. You are solely responsible for (1) selecting the appropriate TI products for your application, (2) designing, validating and testing your application, and (3) ensuring your application meets applicable standards, and any other safety, security, or other requirements. These resources are subject to change without notice. TI grants you permission to use these resources only for development of an application that uses the TI products described in the resource. Other reproduction and display of these resources is prohibited. No license is granted to any other TI intellectual property right or to any third party intellectual property right. TI disclaims responsibility for, and you will fully indemnify TI and its representatives against, any claims, damages, costs, losses, and liabilities arising out of your use of these resources.

TI’s products are provided subject to TI’s Terms of Sale (www.ti.com/legal/termsofsale.html) or other applicable terms available either on ti.com or provided in conjunction with such TI products. TI’s provision of these resources does not expand or otherwise alter TI’s applicable warranties or warranty disclaimers for TI products.

Mailing Address: Texas Instruments, Post Office Box 655303, Dallas, Texas 75265
Copyright © 2020, Texas Instruments Incorporated