DUAL 12-BIT 200-MSPS DIGITAL-TO-ANALOG CONVERTER

FEATURES

- **Controlled Baseline**
  - **One Assembly**
  - **One Test Site**
  - **One Fabrication Site**
- **Extended Temperature Performance of –55°C to 125°C**
- **Enhanced Diminishing Manufacturing Sources (DMS) Support**
- **Enhanced Product-Change Notification**
- **Qualification Pedigree** (1)
- **12-Bit Dual Transmit Digital-to-Analog Converter (DAC)**
- **200-MSPS Update Rate**
- **Single Supply: 3 V to 3.6 V**
- **High Spurious-Free Dynamic Range (SFDR): 85 dBc at 5 MHz**
- **High Third-Order Two-Tone Intermodulation (IMD3): 78 dBc at 15.1 and 16.1 MHz**
- **WCDMA Adjacent Channel Leakage Ratio (ACLR): 70 dB at 30.72 MHz**
- **Independent or Single Resistor Gain Control**
- **Dual or Interleaved Data**
- **On-Chip 1.2-V Reference**
- **Low Power: 330 mW**
- **Power-Down Mode: 15 mW**
- **Package: 48-Pin Thin Quad Flat Pack (TQFP)**

(1) Component qualification in accordance with JEDEC and industry standards to ensure reliable operation over an extended temperature range. This includes, but is not limited to, Highly Accelerated Stress Test (HAST) or biased 85/85, temperature cycle, autoclave or unbiased HAST, electromigration, bond intermetallic life, and mold compound life. Such qualification testing should not be viewed as justifying use of this component beyond specified performance and environmental limits.

APPLICATIONS

- **Cellular Base Transceiver Station Transmit Channel**
  - **CDMA: W-CDMA, CDMA2000, IS-95**
  - **TDMA: GSM, IS-136, EDGE/UWC-136**
- **Medical/Test Instrumentation**
- **Arbitrary Waveform Generators (ARB)**
- **Direct Digital Synthesis (DDS)**
- **Cable Modem Termination System (CMTS)**

DESCRIPTION

The DAC5662 is a monolithic, dual-channel 12-bit, high-speed digital-to-analog converter (DAC) with on-chip voltage reference.

Operating with update rates of up to 200 MSPS, the DAC5662 offers exceptional dynamic performance, tight gain, and offset matching characteristics that make it suitable in either I/Q baseband or direct IF communication applications.

Each DAC has a high-impedance differential-current output, suitable for single-ended or differential analog-output configurations. External resistors allow scaling the full-scale output current for each DAC separately or together, typically between 2 mA and 20 mA. An accurate on-chip voltage reference is temperature compensated and delivers a stable 1.2-V reference voltage. Optionally, an external reference may be used.

The DAC5662 has two 12-bit parallel input ports with separate clocks and data latches. For flexibility, the DAC5662 also supports multiplexed data for each DAC on one port when operating in the interleaved mode.

The DAC5662 has been specifically designed for a differential transformer coupled output with a 50-Ω doubly terminated load. For a 20-mA full-scale output current a 4:1 impedance ratio (resulting in an output power of 4 dBm) and 1:1 impedance ratio transformer (–2-dBm output power) are supported.

Please be aware that an important notice concerning availability, standard warranty, and use in critical applications of Texas Instruments semiconductor products and disclaimers thereto appears at the end of this data sheet.

PRODUCTION DATA information is current as of publication date. Products conform to specifications per the terms of the Texas Instruments standard warranty. Production processing does not necessarily include testing of all parameters.

Copyright © 2006, Texas Instruments Incorporated

DESCRIPTION (CONTINUED)

The DAC5662 is available in a 48-pin thin quad flat pack (TQFP). Pin compatibility between family members provides 12-bit (DAC5662) and 14-bit (DAC5672) resolution. Furthermore, the DAC5662 is pin compatible to the DAC2902 and AD9765 dual DACs. The device is characterized for operation over the military temperature range of –55°C to 125°C.

FUNCTIONAL BLOCK DIAGRAM

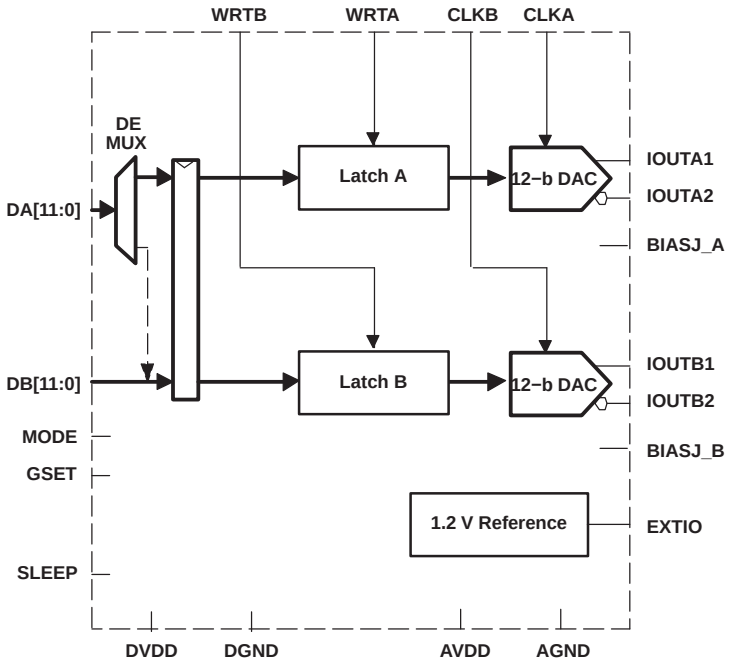

AVAILABLE OPTIONS

T_A	PACKAGED DEVICES 48-PIN TQFP
–55°C to 125°C	DAC5662MPFBREP
	DAC5662MPFBEP

DEVICE INFORMATION

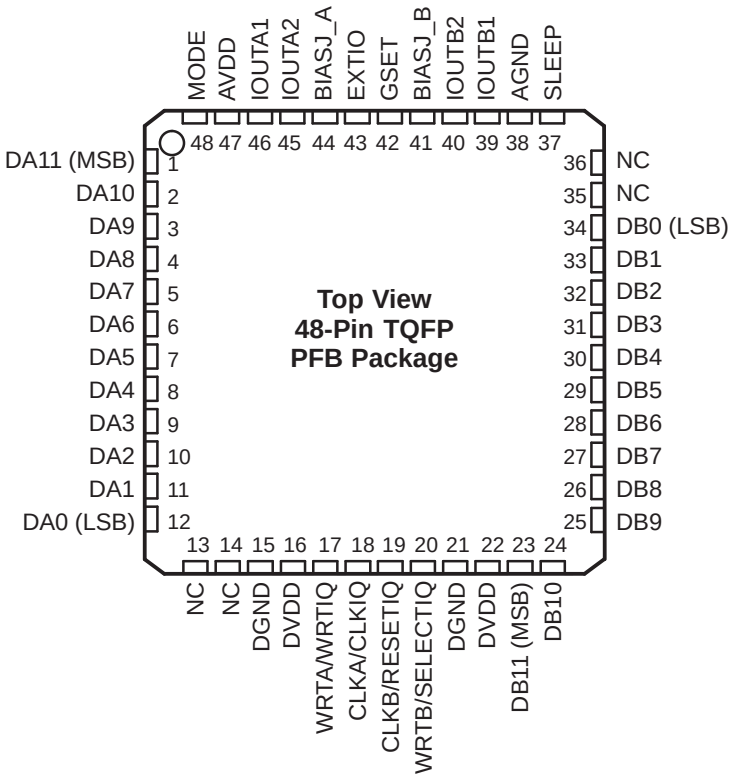

DEVICE INFORMATION (continued)

TERMINAL FUNCTIONS

TERMINAL		I/O	DESCRIPTION
NAME	NO.		
AGND	38	I	Analog ground
AVDD	47	I	Analog supply voltage
BIASJ_A	44	O	Full-scale output current bias for DACA
BIASJ_B	41	O	Full-scale output current bias for DACB
CLKA/CLKIQ	18	I	Clock input for DACA, CLKIQ in interleaved mode
CLKB/RESETIQ	19	I	Clock input for DACB, RESETIQ in interleaved mode
DA[11:0]	1–12	I	Data port A. DA11 is MSB and DA0 is LSB.
DB[11:0]	23–34	I	Data port B. DB11 is MSB and DB0 is LSB.
DGND	15, 21	I	Digital ground
DVDD	16, 22	I	Digital supply voltage
EXTIO	43	I/O	Internal reference output (bypass with 0.1 μF to AGND) or external reference input
GSET	42	I	Gain-setting mode: H = 1 resistor, L = 2 resistors. Internal pullup
IOUTA1	46	O	DACA current output. Full scale with all bits of DA high.
IOUTA2	45	O	DACA complementary current output. Full scale with all bits of DA low.
IOUTB1	39	O	DACB current output. Full scale with all bits of DB high.
IOUTB2	40	O	DACB complementary current output. Full scale with all bits of DB low.
MODE	48	I	Mode select: H = dual bus, L = interleaved. Internal pullup.
NC	13, 14, 35, 36	–	No connection
SLEEP	37	I	Sleep function control input: H = DAC in power-down mode, L = DAC in operating mode. Internal pulldown.
WRTA/WRTIQ	17	I	Input write signal for PORT A (WRTIQ in interleaving mode)
WRTB/SELECTIQ	20	I	Input write signal for PORT B (SELECTIQ in interleaving mode)

PFB PACKAGE THERMAL CHARACTERISTICS

PARAMETER	POWERPAD CONNECTED TO PCB THERMAL PLANE
Thermal resistance, junction to ambient	63.7°C/W
Thermal resistance, junction to case	19.6°C/W

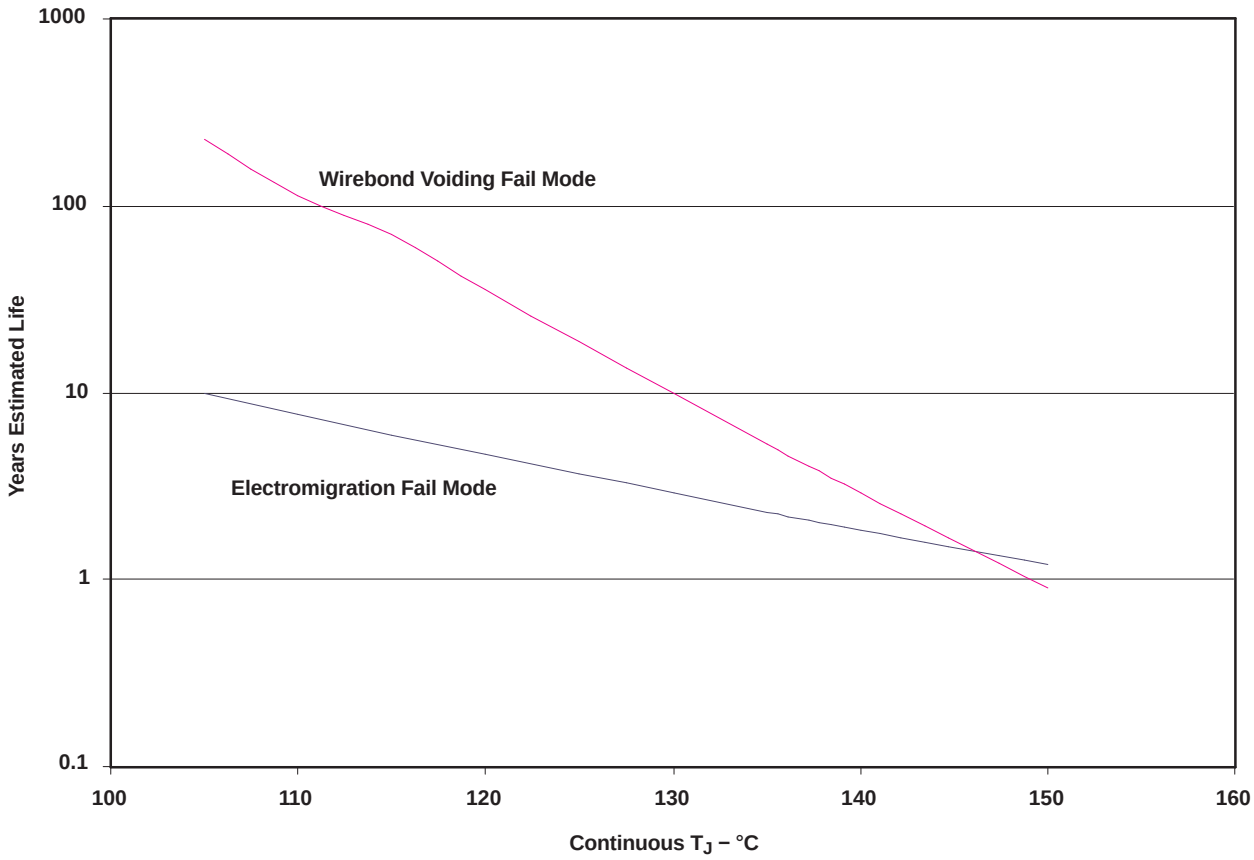

Figure 1. DAC5662MPFB Operating Life Derating Chart

ABSOLUTE MAXIMUM RATINGS(1)

over operating free-air temperature range (unless otherwise noted)

		UNIT
Supply voltage range	AVDD(2)	–0.5 V to 4 V
	DVDD(3)	–0.5 V to 4 V
Voltage between AGND and DGND		–0.5 V to 0.5 V
Voltage between AVDD and DVDD		–0.5 V to 0.5 V
Supply voltage range	DA[11:0] and DB[11:0](3)	–0.5 V to DVDD + 0.5 V
	MODE, CLKA, CLKB, WRTA, WRTB(3)	–0.5 V to DVDD + 0.5 V
	IOUTA1, IOUTA2, IOUTB1, IOUTB2(2)	–1 V to AVDD + 0.5 V
	EXTIO, BIASJ_A, BIASJ_B, SLEEP(2)	–0.5 V to AVDD + 0.5 V
Peak input current (any input)		20 mA
Peak total input current (all inputs)		–30 mA
Operating free-air temperature range		–55°C to 125°C
Storage temperature range		–65°C to 150°C
Lead temperature	1,6 mm (1/16 in) from the case for 10 s	260°C

(1) Stresses beyond those listed under “absolute maximum ratings” may cause permanent damage to the device. These are stress ratings only and functional operation of these or any other conditions beyond those indicated under “recommended operating conditions” is not implied. Exposure to absolute-maximum-rated conditions for extended periods may affect device reliability.
(2) Measured with respect to AGND
(3) Measured with respect to DGND

ELECTRICAL CHARACTERISTICS

over operating free-air temperature range, AVDD = DVDD = 3.3 V, I_{OUTFS} = 20 mA, independent gain set mode (unless otherwise noted)

PARAMETER		TEST CONDITIONS	MIN	TYP	MAX	UNIT
DC Specifications						
	Resolution		12			Bits
DC Accuracy(1)						
INL	Integral nonlinearity	1 LSB = $IOUT_{FS}/2^{12}$, T_A = 25°C	–2	0.3	2	LSB
DNL	Differential nonlinearity	1 LSB = $IOUT_{FS}/2^{12}$, T_A = 25°C	–2	0.2	2	LSB
Analog Output						
	Offset error			0.03		%FSR
	Gain error	With external reference		0.25		%FSR
		With internal reference		0.5		%FSR
	Minimum full-scale output current(2)			2		mA
	Maximum full-scale output current(2)			20		mA
	Gain mismatch	With internal reference	–2	0.07	2	%FSR
	Output voltage compliance range(3)		–0.8		1.25	V
R_O	Output resistance			300		kΩ
C_O	Output capacitance			5		pF
Reference Output						
	Reference voltage		1.14	1.2	1.26	V
	Reference output current(4)			100		nA
Reference Input						
V_{EXTIO}	Input voltage		0.1		1.25	V
R_I	Input resistance			1		MΩ
	Small signal bandwidth			300		kHz
C_I	Input capacitance			100		pF
Temperature Coefficients						
	Offset drift			0		ppm of FSR/°C
	Gain drift	With external reference		±50		ppm of FSR/°C
		With internal reference		±50		
	Reference voltage drift			±20		ppm/°C

(1) Measured differentially through 50 Ω to AGND.
(2) Nominal full-scale current, I_{OUTFS}, equals 32× the IBIAS current.
(3) The lower limit of the output compliance is determined by the CMOS process. Exceeding this limit may result in transistor breakdown, resulting in reduced reliability of the DAC5662 device. The upper limit of the output compliance is determined by the load resistors and full-scale output current. Exceeding the upper limit adversely affects distortion performance and intergral nonlinearity.
(4) Use an external buffer amplifier with high impedance input to drive any external load.

ELECTRICAL CHARACTERISTICS

over operating free-air temperature range, AVDD = DVDD = 3.3 V, I_{OUTFS} = 20 mA, f_{DATA} = 200 MSPS, f_{OUT} = 1 MHz, independent gain set mode (unless otherwise noted)

PARAMETER		TEST CONDITIONS	MIN	TYP	MAX	UNIT
Power Supply						
AVDD	Analog supply voltage		3	3.3	3.6	V
DVDD	Digital supply voltage		3	3.3	3.6	V
I_{AVDD}	Supply current, analog	Including output current through load resistor		75	90	mA
		Sleep mode with clock		2.5	6	
		Sleep mode without clock		2.5		
I_{DVDD}	Supply current, digital			25	38	mA
		Sleep mode with clock		12.5	18	
		Sleep mode without clock		<10		
	Power dissipation			330	390	mW
		Sleep mode without clock		15		
		f_{DATA} = 200 MSPS, f_{OUT} = 20 MHz		350		
APSSR	Analog power-supply rejection ratio		–0.2		0.2	%FSR/V
DPSRR	Digital power-supply rejection ratio		–0.2		0.2	%FSR/V
T_A	Operating free-air temperature		–55		125	°C

ELECTRICAL CHARACTERISTICS

AC specifications over operating free-air temperature range, AVDD = DVDD = 3.3 V, I_{OUTFS} = 20 mA, independent gain set mode, differential 1:1 impedance ratio transformer coupled output, 50-Ω doubly terminated load (unless otherwise noted)

PARAMETER		TEST CONDITIONS	MIN	TYP	MAX	UNIT
Analog Output						
f_{clk}	Maximum output update rate		200	275(1)		MSPS
t_s	Output settling time to 0.1% (DAC)	Mid-scale transition		20		ns
t_r	Output rise time 10% to 90% (OUT)			1.4		ns
t_f	Output fall time 90% to 10% (OUT)			1.5		ns
	Output noise	I_{OUTFS} = 20 mA		55		pA/√Hz
		I_{OUTFS} = 2 mA		30		
AC Linearity						
SFDR	Spurious-free dynamic range	1st Nyquist zone, T_A = 25°C, f_{DATA} = 50 MSPS, f_{OUT} = 1 MHz, I_{OUTFS} = 0 dB		81		dBc
		1st Nyquist zone, T_A = 25 C, f_{DATA} = 50 MSPS, f_{OUT} = 1 MHz, I_{OUTFS} = –6 dB		83		
		1st Nyquist zone, T_A = 25°C, f_{DATA} = 50 MSPS, f_{OUT} = 1 MHz, I_{OUTFS} = –12 dB		81		
		1st Nyquist zone, T_A = 25°C, f_{DATA} = 100 MSPS, f_{OUT} = 5 MHz		85		
		1st Nyquist zone, T_A = 25°C, f_{DATA} = 100 MSPS, f_{OUT} = 20 MHz		78		
		1st Nyquist zone, T_A = 25°C, f_{DATA} = 200 MSPS, f_{OUT} = 20 MHz	66	71		
		1st Nyquist zone, T_{min} = –55°C to 125°C, f_{DATA} = 200 MSPS, f_{OUT} = 20 MHz	63	71		
		1st Nyquist zone, T_A = 25°C, f_{DATA} = 200 MSPS, f_{OUT} = 41 MHz		68		
SNR	Signal-to-noise ratio	1st Nyquist zone, T_A = 25°C, f_{DATA} = 100 MSPS, f_{OUT} = 5 MHz		73		dB
		1st Nyquist zone, T_A = 25°C, f_{DATA} = 200 MSPS, f_{OUT} = 20 MHz		67		
ACLR	Adjacent channel leakage ratio	W-CDMA signal with 3.84-MHz bandwidth, f_{DATA} = 61.44 MSPS, IF = 15.36 MHz		70		dB
		W-CDMA signal with 3.84-MHz bandwidth, f_{DATA} = 122.88 MSPS, IF = 30.72 MHz		70		
IMD3	Third-order two-tone intermodulation	Each tone at –6 dBFS, T_A = 25°C, f_{DATA} = 200 MSPS, f_{OUT} = 45.4 MHz and 46.4 MHz		62		dBc
		Each tone at –6 dBFS, T_A = 25°C, f_{DATA} = 100 MSPS, f_{OUT} = 15.1 MHz and 16.1 MHz		78		
IMD	Four-tone intermodulation	Each tone at –12 dBFS, T_A = 25°C, f_{DATA} = 100 MSPS, f_{OUT} = 15.6, 15.8, 16.2, and 16.4 MHz		77		dBc
		Each tone at –12 dBFS, T_A = 25°C, f_{DATA} = 165 MSPS, f_{OUT} = 68.8, 69.6, 71.2, and 72 MHz		56		
		Each tone at –12 dBFS, T_A = 25°C, f_{DATA} = 165 MSPS, f_{OUT} = 19.0, 19.1, 19.3, and 19.4 MHz		74		
	Channel isolation	T_A = 25°C, f_{DATA} = 165 MSPS, f_{OUT} (CH1) = 20 MHz, f_{OUT} (CH2) = 21 MHz		97		dBc

(1) Specified by design. Not production tested.

ELECTRICAL CHARACTERISTICS

Digital specifications over operating free-air temperature range, AVDD = DVDD = 3.3 V, I_{OUTFS} = 20 mA (unless otherwise noted)

PARAMETER		MIN	TYP	MAX	UNIT
Digital Input					
V_{IH}	High-level input voltage	2		3.3	V
V_{IL}	Low-level input voltage	0		0.8	V
I_{IH}	High-level input current		50		µA
I_{IL}	Low-level input current		10		µA
$I_{IH(GSET)}$	High-level input current, GSET pin		7		µA
$I_{IL(GSET)}$	Low-level input current, GSET pin		–30		µA
$I_{IH(MODE)}$	High-level input current, MODE pin		–30		µA
$I_{IL(MODE)}$	Low-level input current, MODE pin		–80		µA
C_I	Input capacitance		5		pF

SWITCHING CHARACTERISTICS

Digital specifications over operating free-air temperature range, AVDD = DVDD = 3.3 V, I_{OUTFS} = 20 mA (unless otherwise noted)

PARAMETER		MIN	TYP	MAX	UNIT
Timing – Dual Bus Mode					
t_{su}	Input setup time	1			ns
t_h	Input hold time	1			ns
t_{LPH}	Input clock pulse high time		2		ns
t_{LAT}	Clock latency (WRTA/B to outputs)(1)	4		4	clk
t_{PD}	Propagation delay time		1.5		ns
Timing – Single Bus Interleaved Mode					
t_{su}	Input setup time		0.5		ns
t_h	Input hold time		0.5		ns
t_{LAT}	Clock latency (WRTA/B to outputs)(1)	4		4	clk
t_{PD}	Propagation delay time		1.5		ns

(1) Specified by design

TYPICAL CHARACTERISTICS

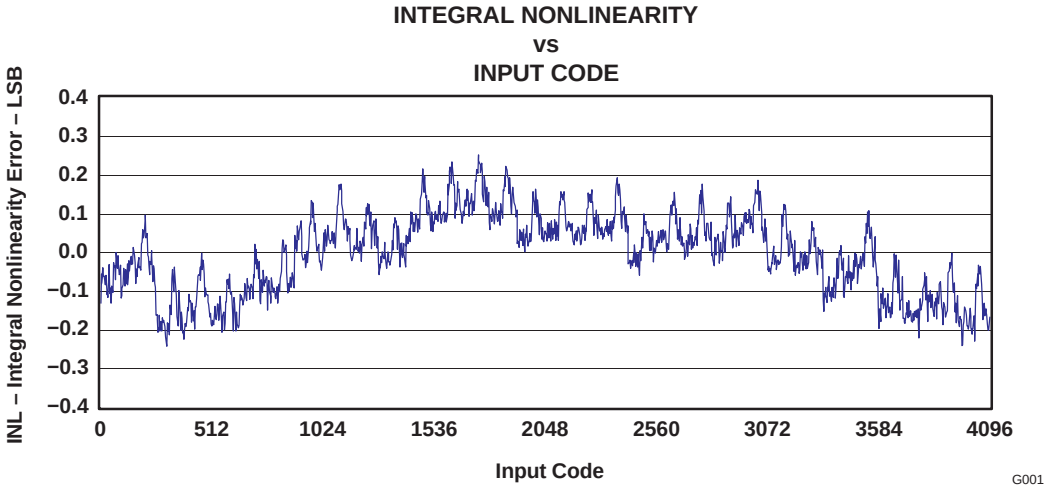

Figure 2.

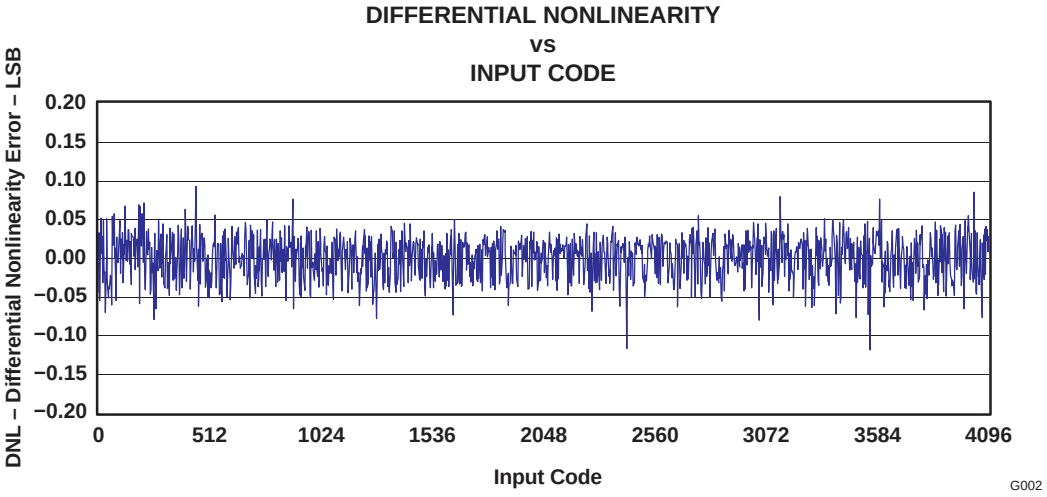

Figure 3.

TYPICAL CHARACTERISTICS (continued)

SPURIOUS-FREE DYNAMIC RANGE
vs
OUTPUT FREQUENCY

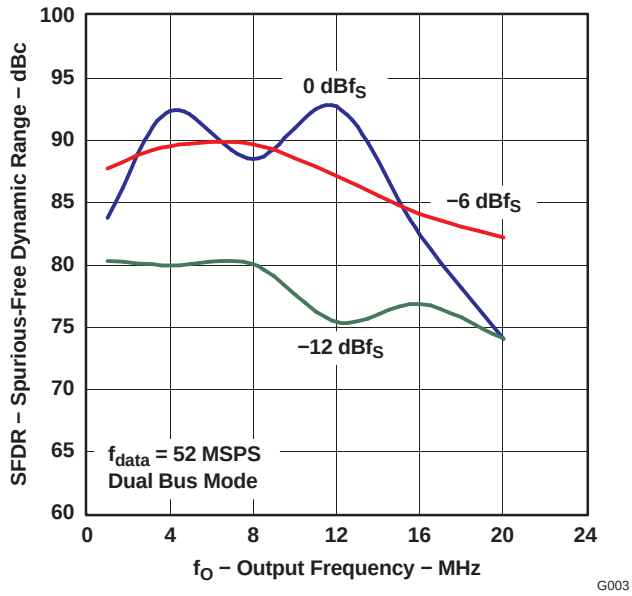

Figure 4.

SPURIOUS-FREE DYNAMIC RANGE
vs
OUTPUT FREQUENCY

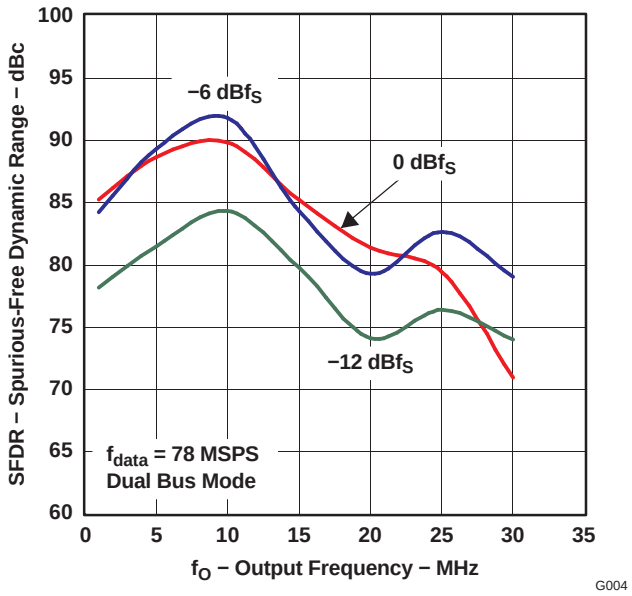

Figure 5.

SPURIOUS-FREE DYNAMIC RANGE
vs
OUTPUT FREQUENCY

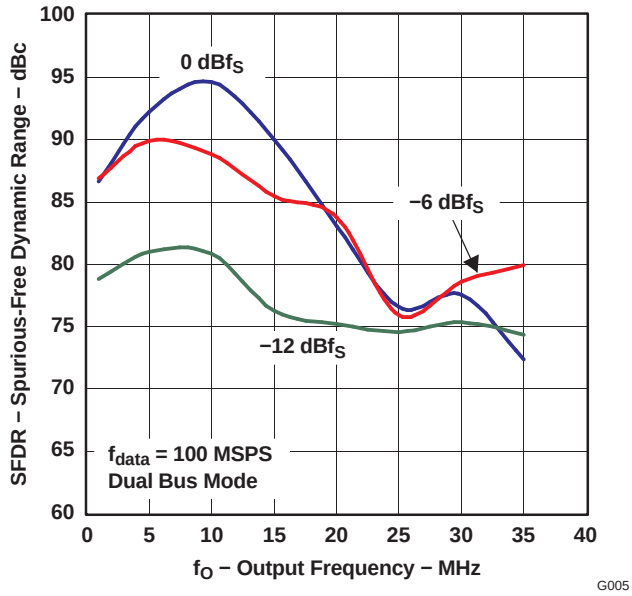

Figure 6.

SPURIOUS-FREE DYNAMIC RANGE
vs
OUTPUT FREQUENCY

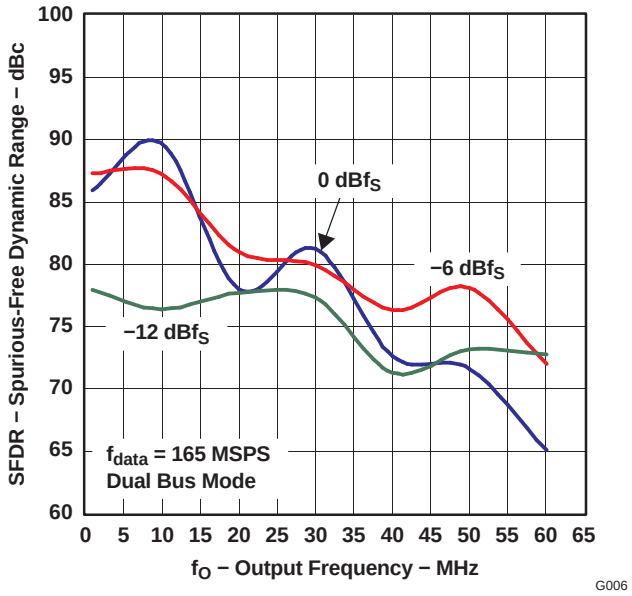

Figure 7.

TYPICAL CHARACTERISTICS (continued)

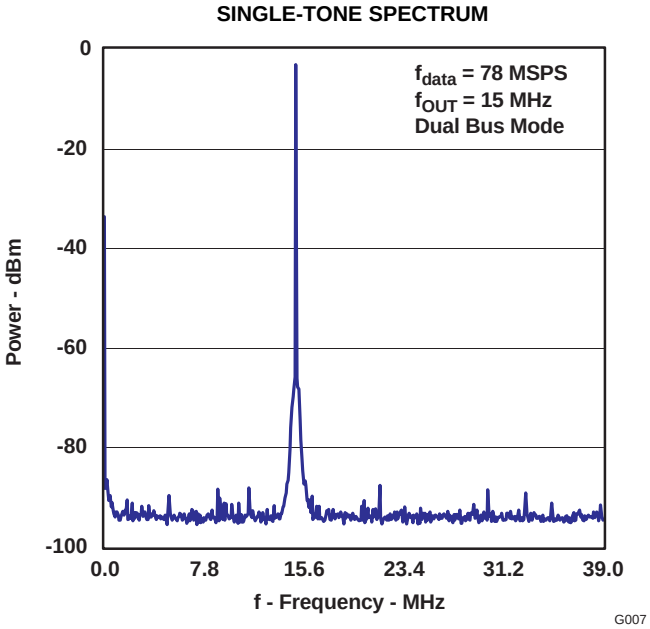

Figure 8.

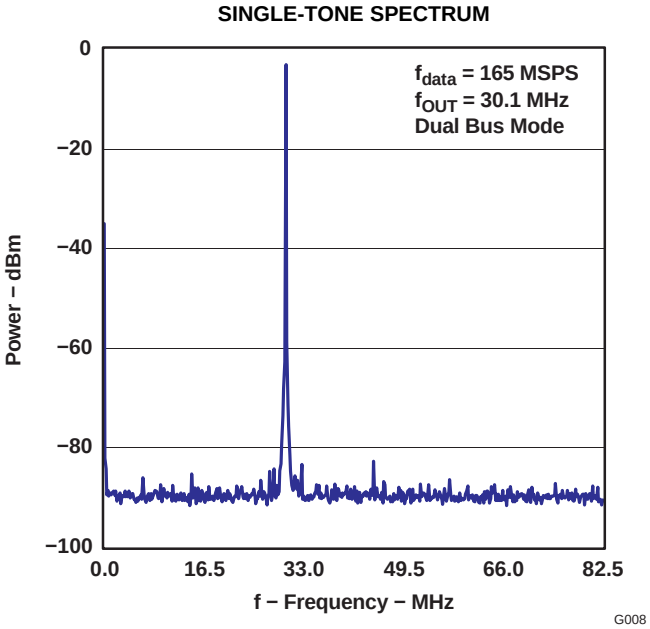

Figure 9.

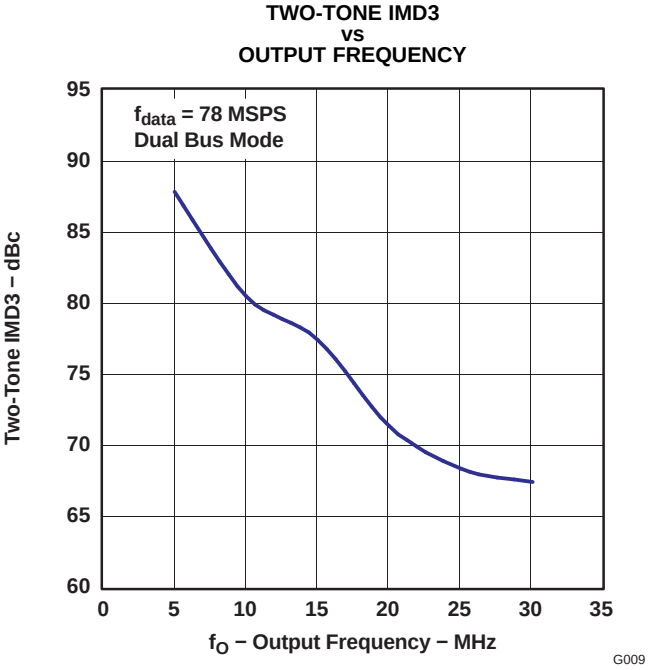

Figure 10.

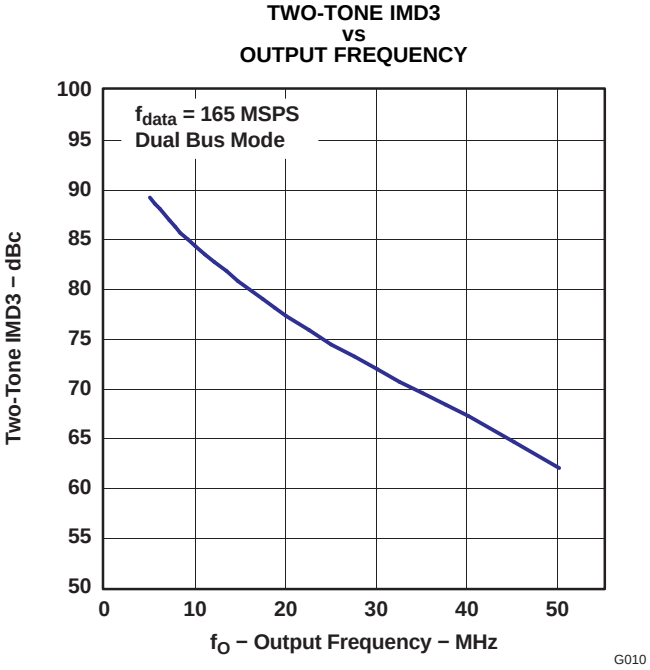

Figure 11.

TYPICAL CHARACTERISTICS (continued)

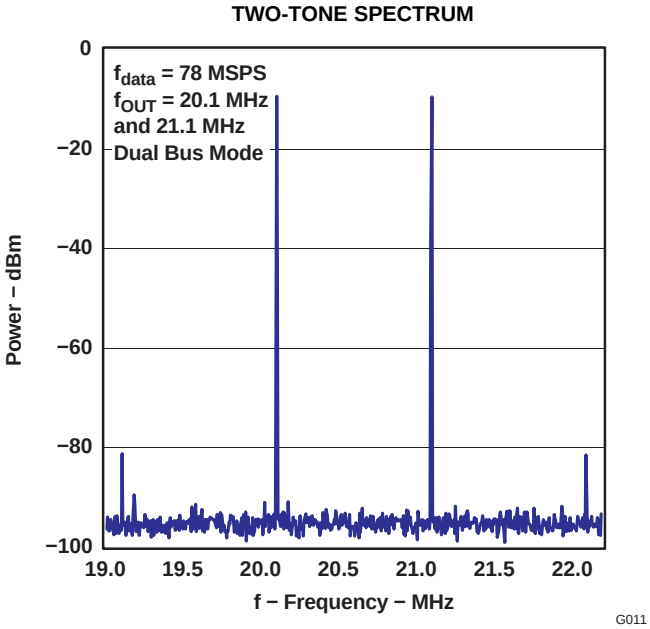

Figure 12.

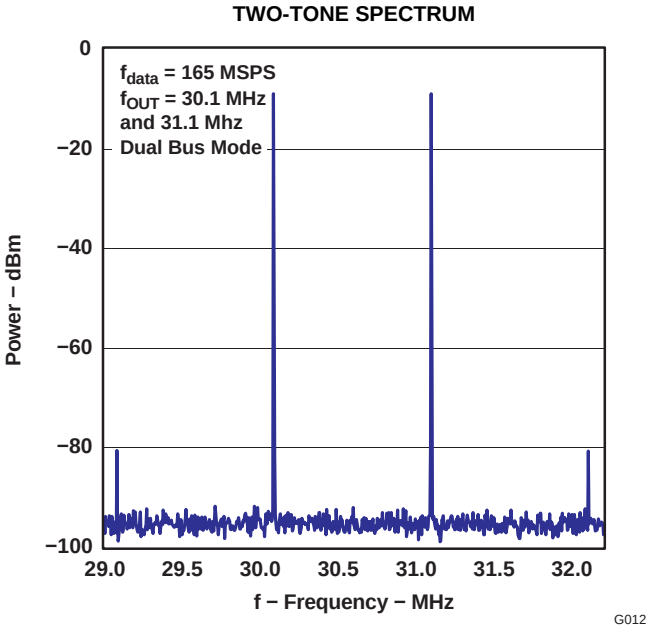

Figure 13.

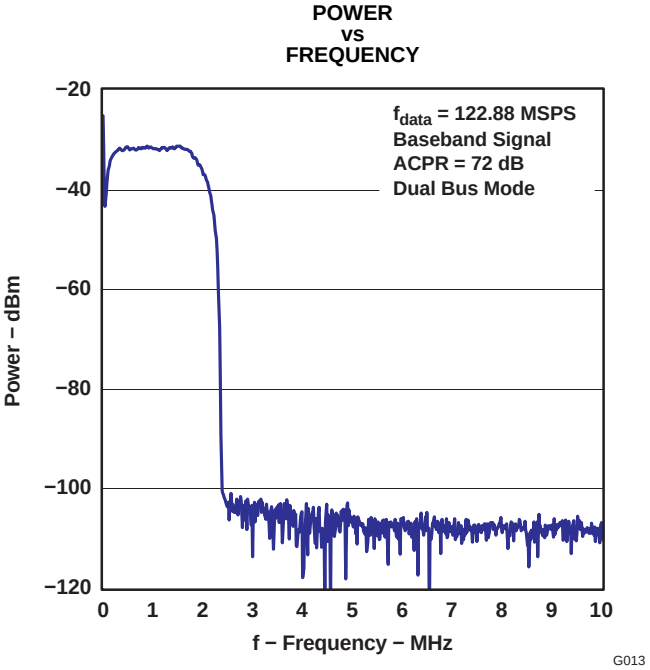

Figure 14.

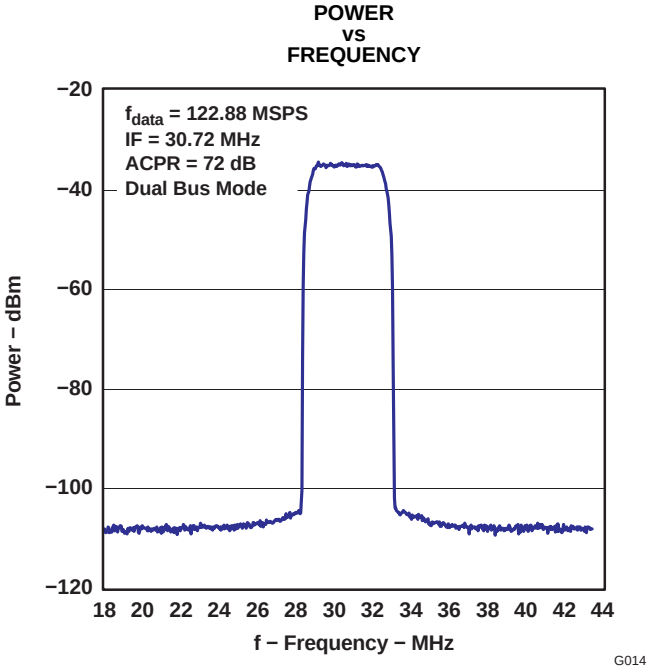

Figure 15.

DIGITAL INPUTS AND TIMING

Digital Inputs

The data input ports of the DAC5662 accept a standard positive coding with data bit D11 being the most significant bit (MSB). The converter outputs are specified to support a clock rate up to 200 MSPS. The best performance is typically be achieved with a symmetric duty cycle for write and clock; however, the duty cycle may vary as long as the timing specifications are met. Similarly, the setup and hold times may be chosen within their specified limits.

All digital inputs of the DAC5662 are CMOS compatible. Figure 16 and Figure 17 show schematics of the equivalent CMOS digital inputs of the DAC5662. The 12-bit digital data input follows the offset positive binary coding scheme. The DAC5662 is designed to operate with a digital supply (DVDD) of 3 V to 3.6 V.

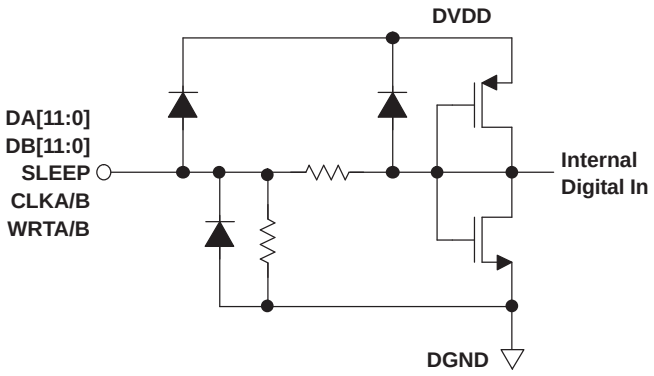

Figure 16. CMOS/TTL Digital Equivalent Input With Internal Pulldown Resistor

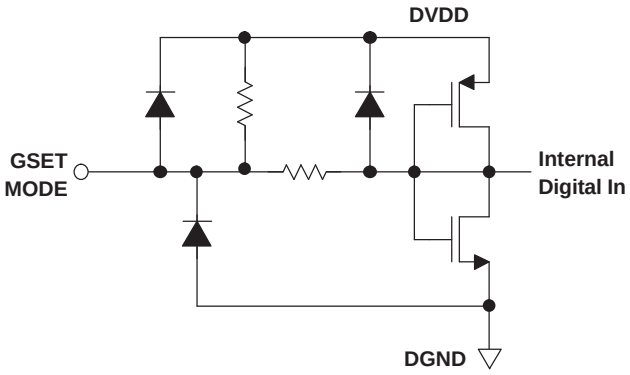

Figure 17. CMOS/TTL Digital Equivalent Input With Internal Pullup Resistor

Input Interfaces

The DAC5662 features two operating modes selected by the MODE pin (see Table 1).

- For dual-bus input mode, the device essentially consists of two separate DACs. Each DAC has its own separate data input bus, clock input, and data write signal (data latch-in).
- In single-bus interleaved mode, the data should be presented interleaved at the I-channel input bus. The Q-channel input bus is not used in this mode. The clock and write input are now shared by both DACs.

Table 1. Operating Modes

MODE PIN	Mode pin connected to DGND	Mode pin connected to DVDD
BUS INPUT	Single-bus interleaved mode, clock and write input equal for both DACs	Dual-bus mode, DACs operate independently

DIGITAL INPUTS AND TIMING (continued)

Dual-Bus Data Interface and Timing

In dual-bus mode, the MODE pin is connected to DVDD. The two converter channels within the DAC5662 consist of two independent, 12-bit, parallel data ports. Each DAC channel is controlled by its own set of write (WRTA, WRTB) and clock (CLKA, CLKB) lines. The WRT lines control the channel input latches and the CLK lines control the DAC latches. The data is first loaded into the input latch by a rising edge of the WRT line

The internal data transfer requires a correct sequence of write and clock inputs, since essentially two clock domains having equal periods (but possibly different phases) are input to the DAC5662. This is defined by a minimum requirement of the time between the rising edge of the clock and the rising edge of the write inputs. This essentially implies that the rising edge of CLK must occur at the same time or before the rising edge of the WRT signal. A minimum delay of 2 ns should be maintained if the rising edge of the clock occurs after the rising edge of the write. Note that these conditions are satisfied when the clock and write inputs are connected externally. Note that all specifications were measured with the WRT and CLK lines connected together.

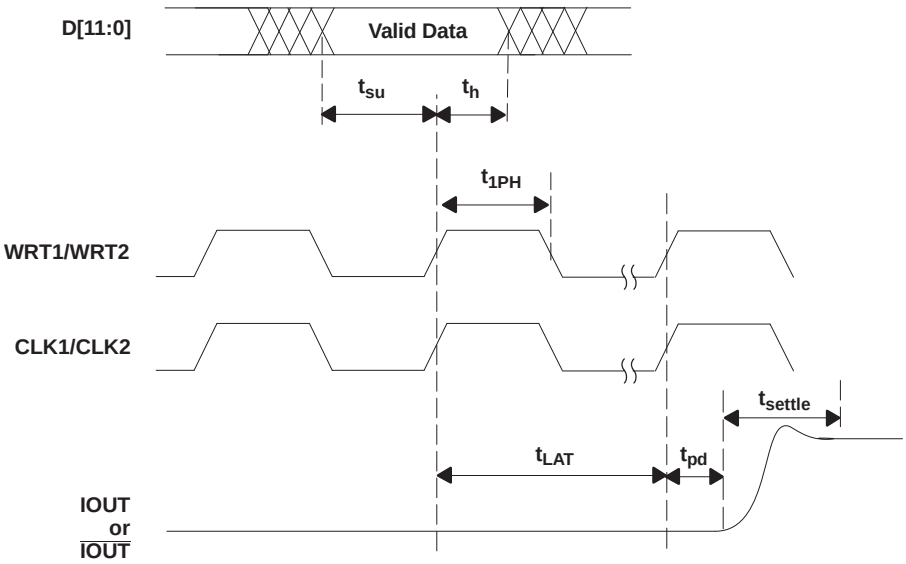

Figure 18. Dual-Bus-Mode Operation

Single-Bus Interleaved Data Interface and Timing

In single-bus interleaved mode, the MODE pin is connected to DGND. Figure 19 shows the timing diagram. In interleaved mode, the I and Q channels share the write input (WRTIQ) and update clock (CLKIQ and internal CLKDACIQ). Multiplexing logic directs the input word at the I-channel input bus to either the I-channel input latch (SELECTIQ is high) or to the Q-channel input latch (SELECTIQ is low). When SELECTIQ is high, the data value in the Q-channel latch is retained by presenting the latch output data to its input again. When SELECTIQ is low, the data value in the I-channel latch is retained by presenting the latch output data to its input.

In interleaved mode, the I-channel input data rate is twice the update rate of the DAC core. As in dual-bus mode, it is important to maintain a correct sequence of write and clock inputs. The edge-triggered flip-flops latch the I- and Q-channel input words on the rising edge of the write input (WRTIQ). This data is presented to the I- and Q-DAC latches on the following falling edge of the write inputs. The DAC5662 clock input is divided by a factor of two before it is presented to the DAC latches.

Correct pairing of the I- and Q-channel data is done by RESETIQ. In interleaved mode, the clock input CLKIQ is divided by two, which would translate to a nondeterministic relation between the rising edges of the CLKIQ and CLKDACIQ. RESETIQ ensures, however, that the correct position of the rising edge of CLKDACIQ, with respect to the data at the input of the DAC latch, is determined. CLKDACIQ is disabled (low) when RESETIQ is high.

DIGITAL INPUTS AND TIMING (continued)

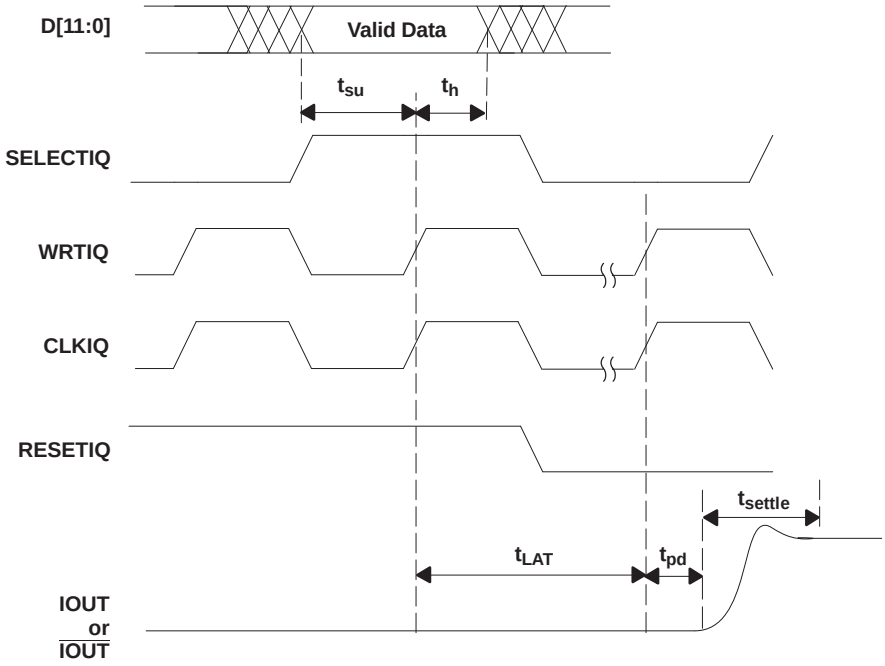

Figure 19. Single-Bus Interleaved-Mode Operation

APPLICATION INFORMATION

Theory of Operation

The architecture of the DAC5662 uses a current steering technique to enable fast switching and high update rate. The core element within the monolithic DAC is an array of segmented current sources that are designed to deliver a full-scale output current of up to 20 mA. An internal decoder addresses the differential current switches each time the DAC is updated and a corresponding output current is formed by steering all currents to either output summing node, I_{OUT1} and I_{OUT2}. The complementary outputs deliver a differential output signal, which improves the dynamic performance through reduction of even-order harmonics, common-mode signals (noise), and double the peak-to-peak output signal swing by a factor of two, compared to single-ended operation.

The segmented architecture results in a significant reduction of the glitch energy and improves the dynamic performance (SFDR) and DNL. The current outputs maintain a high output impedance of greater than 300 kΩ.

When pin 42 (GSET) is high (one resistor mode), the full-scale output current for both DACs is determined by the ratio of the internal reference voltage (1.2 V) and an external resistor (R_{SET}) connected to BIASJ_A. When GSET is low (two resistor mode), the full-scale output current for each DACs is determined by the ratio of the internal reference voltage (1.2 V) and separate external resistors (R_{SET}) connected to BIASJ_A and BIASJ_B. The resulting I_{REF} is internally multiplied by a factor of 32 to produce an effective DAC output current that can range from 2 mA to 20 mA, depending on the value of R_{SET}.

The DAC5662 is split into a digital and an analog portion, each of which is powered through its own supply pin. The digital section includes edge-triggered input latches and the decoder logic, while the analog section comprises the current source array with its associated switches, and the reference circuitry.

DAC Transfer Function

Each of the DACs in the DAC5662 has a set of complementary current outputs, I_{OUT1} and I_{OUT2}. The full-scale output current, I_{OUTFS}, is the summation of the two complementary output currents:

$$I_{OUTFS} = I_{OUT1} + I_{OUT2} \quad (1)$$

The individual output currents depend on the DAC code and can be expressed as:

$$I_{OUT1} = I_{OUTFS} \times \left(\frac{Code}{4096}\right) \quad (2)$$

$$I_{OUT2} = I_{OUTFS} \times \left(4095 - \frac{Code}{4096}\right) \quad (3)$$

where Code is the decimal representation of the DAC data input word. Additionally, I_{OUTFS} is a function of the reference current I_{REF}, which is determined by the reference voltage and the external setting resistor (R_{SET}).

$$I_{OUTFS} = 32 \times I_{REF} = 32 \times \frac{V_{REF}}{R_{SET}} \quad (4)$$

In most cases, the complementary outputs drive resistive loads or a terminated transformer. A signal voltage develops at each output according to:

$$V_{OUT1} = I_{OUT1} \times R_{LOAD} \quad (5)$$

$$V_{OUT2} = I_{OUT2} \times R_{LOAD} \quad (6)$$

The value of the load resistance is limited by the output compliance specification of the DAC5662. To maintain specified linearity performance, the voltage for I_{OUT1} and I_{OUT2} should not exceed the maximum allowable compliance range.

APPLICATION INFORMATION (continued)

The total differential output voltage is:

$$V_{OUTDIFF} = V_{OUT1} - V_{OUT2} \quad (7)$$

$$V_{OUTDIFF} = \frac{(2 \times Code - 4095)}{4096} \times I_{OUTFS} \times R_{LOAD} \quad (8)$$

Analog Outputs

The DAC5662 provides two complementary current outputs, I_{OUT1} and I_{OUT2}. The simplified circuit of the analog output stage representing the differential topology is shown in Figure 20. The output impedance of I_{OUT1} and I_{OUT2} results from the parallel combination of the differential switches, along with the current sources and associated parasitic capacitances.

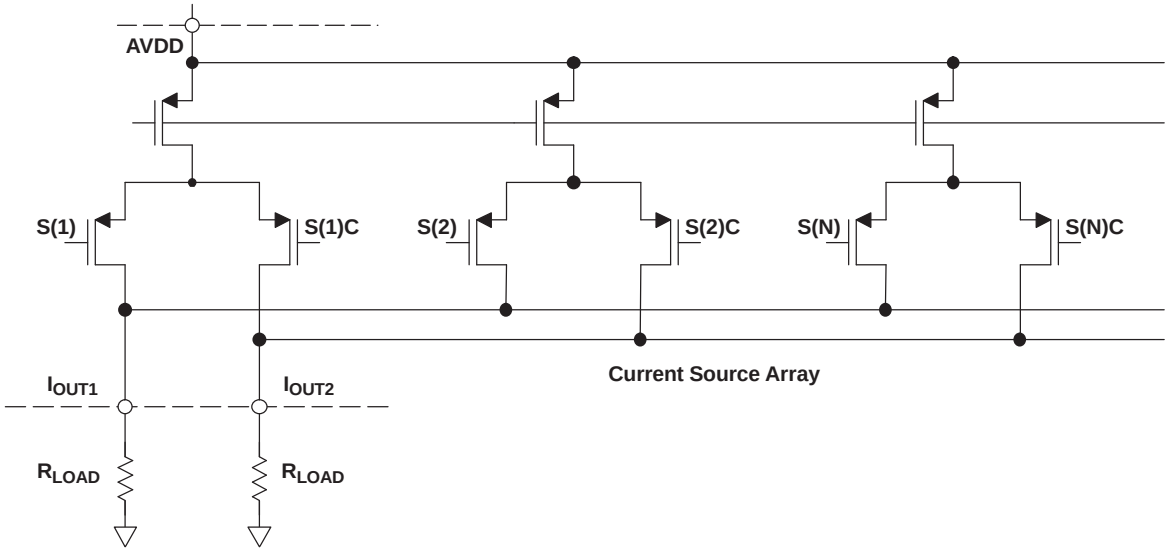

Figure 20. Analog Outputs

The signal voltage swing that may develop at the two outputs, I_{OUT1} and I_{OUT2}, is limited by a negative and positive compliance. The negative limit of –1 V is given by the breakdown voltage of the CMOS process and exceeding it compromises the reliability of the DAC5662 or even causes permanent damage. With the full-scale output set to 20 mA, the positive compliance equals 1.2 V. Note that the compliance range decreases to about 1 V for a selected output current of I_{OUTFS} = 2 mA. Care should be taken that the configuration of DAC5662 does not exceed the compliance range to avoid degradation of the distortion performance and integral linearity.

Best distortion performance is typically achieved with the maximum full-scale output signal limited to approximately 0.5 V_{PP}. This is the case for a 50-Ω doubly terminated load and a 20-mA full-scale output current. A variety of loads can be adapted to the output of the DAC5662 by selecting a suitable transformer while maintaining optimum voltage levels at I_{OUT1} and I_{OUT2}. Furthermore, using the differential output configuration in combination with a transformer is instrumental for achieving excellent distortion performance. Common-mode errors, such as even-order harmonics or noise, can be substantially reduced. This is particularly the case with high output frequencies.

For those applications requiring the optimum distortion and noise performance, it is recommended to select a full-scale output of 20 mA. A lower full-scale range of 2 mA may be considered for applications that require low power consumption, but can tolerate a slight reduction in performance level.

APPLICATION INFORMATION (continued)

Output Configurations

The current outputs of the DAC5662 allow for a variety of configurations. As mentioned previously, utilizing the converter's differential outputs yield the best dynamic performance. Such a differential output circuit may consist of an RF transformer or a differential amplifier configuration. The transformer configuration is ideal for most applications with ac coupling, while operational amplifiers are suitable for a dc-coupled configuration.

The single-ended configuration may be considered for applications requiring a unipolar output voltage. Connecting a resistor from either one of the outputs to ground converts the output current into a ground-referenced voltage signal. To improve on the dc linearity by maintaining a virtual ground, an I-to-V or operational amplifier configuration may be considered.

Differential With Transformer

Using an RF transformer provides a convenient way of converting the differential output signal into a single-ended signal while achieving excellent dynamic performance. The appropriate transformer should be carefully selected based on the output frequency spectrum and impedance requirements.

The differential transformer configuration has the benefit of significantly reducing common-mode signals, thus improving the dynamic performance over a wide range of frequencies. Furthermore, by selecting a suitable impedance ratio (winding ratio), the transformer can be used to provide optimum impedance matching while controlling the compliance voltage for the converter outputs.

Figure 21 and Figure 22 show 50-Ω doubly terminated transformer configurations with 1:1 and 4:1 impedance ratios, respectively. Note that the center tap of the primary input of the transformer has to be grounded to enable a dc-current flow. Applying a 20-mA full-scale output current leads to a 0.5-V_{PP} output for a 1:1 transformer and a 1-V_{PP} output for a 4:1 transformer. In general, the 1:1 transformer configuration has slightly better output distortion, but the 4:1 transformer has 6-dB higher output power.

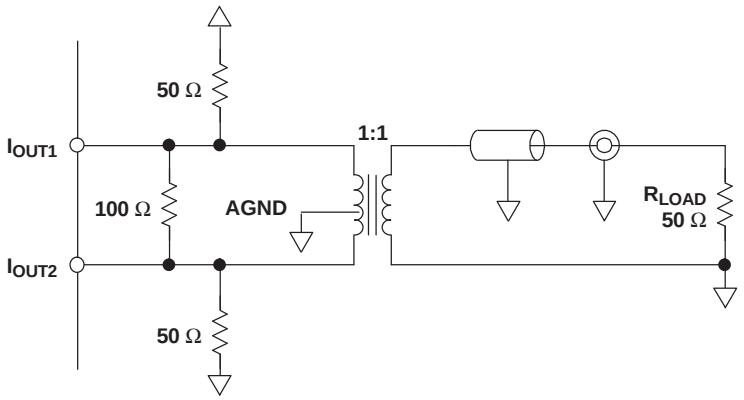

Figure 21. Driving a Doubly-Terminated 50-Ω Cable Using a 1:1 Impedance Ratio Transformer

APPLICATION INFORMATION (continued)

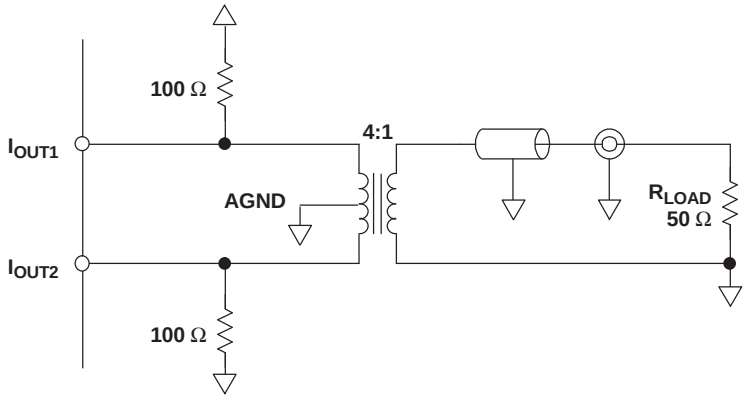

Figure 22. Driving a Doubly-Terminated 50-Ω Cable Using a 4:1 Impedance Ratio Transformer

Single-Ended Configuration

Figure 23 shows the single-ended output configuration, where the output current I_{OUT1} flows into an equivalent load resistance of 25 Ω. Node I_{OUT2} should be connected to AGND or terminated with a resistor of 25 Ω to AGND. The nominal resistor load of 25 Ω gives a differential output swing of 1 V_{PP} when applying a 20-mA full-scale output current.

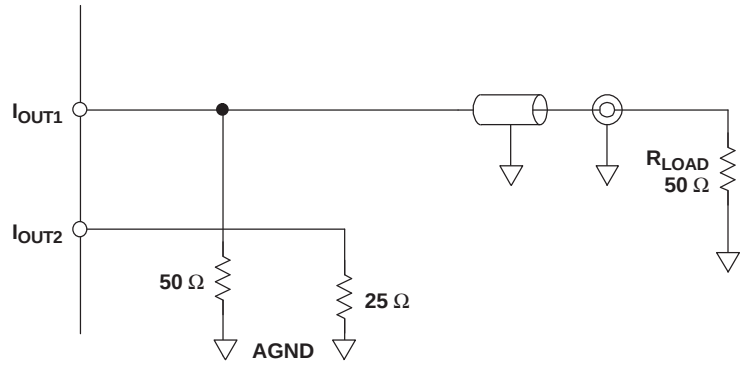

Figure 23. Driving a Doubly-Terminated 50-Ω Cable Using a Single-Ended Output

APPLICATION INFORMATION (continued)

Reference Operation

Internal Reference

The DAC5662 has an on-chip reference circuit which comprises a 1.2-V bandgap reference and two control amplifiers, one for each DAC. The full-scale output current, I_{OUTFS}, of the DAC5662 is determined by the reference voltage, V_{REF}, and the value of resistor R_{SET}. I_{OUTFS} can be calculated by:

$$I_{OUTFS} = 32 \times I_{REF} = 32 \times \frac{V_{REF}}{R_{SET}} \quad (9)$$

The reference control amplifier operates as a V-to-I converter producing a reference current, I_{REF}, which is determined by the ratio of V_{REF} and R_{SET} (see Equation 9). The full-scale output current, I_{OUTFS}, results from multiplying I_{REF} by a fixed factor of 32.

Using the internal reference, a 2-kΩ resistor value results in a full-scale output of approximately 20 mA. Resistors with a tolerance of 1% or better should be considered. Selecting higher values, the output current can be adjusted from 20 mA down to 2 mA. Operating the DAC5662 at lower than 20-mA output currents may be desirable for reasons of reducing the total power consumption, improving the distortion performance, or observing the output compliance voltage limitations for a given load condition.

It is recommended to bypass the EXTIO pin with a ceramic chip capacitor of 0.1 µF or more. The control amplifier is internally compensated and its small signal bandwidth is approximately 300 kHz.

External Reference

The internal reference can be disabled by simply applying an external reference voltage into the EXTIO pin that, in this case, functions as an input. The use of an external reference may be considered for applications that require higher accuracy and drift performance or to add the ability of dynamic gain control.

While a 0.1-µF capacitor is recommended to be used with the internal reference, it is optional for the external reference operation. The reference input, EXTIO, has a high input impedance (1 MΩ) and can easily be driven by various sources. Note that the voltage range of the external reference should stay within the compliance range of the reference input.

Gain Setting Option

The full-scale output current on the DAC5662 can be set two ways — either for each of the two DAC channels independently or for both channels simultaneously. For the independent gain set mode, the GSET pin (pin 42) must be low (that is, connected to AGND). In this mode, two external resistors are required — one R_{SET} connected to the BIASJ_A pin (pin 44) and the other to the BIASJ_B pin (pin 41). In this configuration, the user has the flexibility to set and adjust the full-scale output current for each DAC independently, allowing for the compensation of possible gain mismatches elsewhere within the transmit signal path.

Alternatively, bringing the GSET pin high (that is, connected to AVDD), the DAC5662 switches into the simultaneous gain set mode. Now the full-scale output current of both DAC channels is determined by only one external R_{SET} resistor connected to the BIASJ_A pin. The resistor at the BIASJ_2 pin may be removed; however, this is not required since this pin is not functional in this mode and the resistor has no effect on the gain equation.

Sleep Mode

The DAC5662 features a power-down function that can be used to reduce the total supply current to less than 3.5 mA over the specified supply range if no clock is present. Applying a logic high to the SLEEP pin initiates the power-down mode, while a logic low enables normal operation. When left unconnected, an internal active pulldown circuit enables the normal operation of the converter.

PACKAGING INFORMATION

Orderable Device	Status (1)	Package Type	Package Drawing	Pins	Package Qty	Eco Plan (2)	Lead/ Ball Finish	MSL Peak Temp (3)	Samples (Requires Login)
DAC5662MPFBEP	ACTIVE	TQFP	PFB	48	250	Green (RoHS & no Sb/Br)	CU NIPDAU	Level-2-260C-1 YEAR	
DAC5662MPFBREP	ACTIVE	TQFP	PFB	48	1000	Green (RoHS & no Sb/Br)	CU NIPDAU	Level-2-260C-1 YEAR	
V62/06651-01XE	ACTIVE	TQFP	PFB	48	1000	Green (RoHS & no Sb/Br)	CU NIPDAU	Level-2-260C-1 YEAR	
V62/06651-02XE	ACTIVE	TQFP	PFB	48	250	Green (RoHS & no Sb/Br)	CU NIPDAU	Level-2-260C-1 YEAR	

(1) The marketing status values are defined as follows:
ACTIVE: Product device recommended for new designs.
LIFEBUY: TI has announced that the device will be discontinued, and a lifetime-buy period is in effect.
NRND: Not recommended for new designs. Device is in production to support existing customers, but TI does not recommend using this part in a new design.
PREVIEW: Device has been announced but is not in production. Samples may or may not be available.
OBSOLETE: TI has discontinued the production of the device.

(2) Eco Plan - The planned eco-friendly classification: Pb-Free (RoHS), Pb-Free (RoHS Exempt), or Green (RoHS & no Sb/Br) - please check http://www.ti.com/productcontent for the latest availability information and additional product content details.
TBD: The Pb-Free/Green conversion plan has not been defined.
Pb-Free (RoHS): TI's terms "Lead-Free" or "Pb-Free" mean semiconductor products that are compatible with the current RoHS requirements for all 6 substances, including the requirement that lead not exceed 0.1% by weight in homogeneous materials. Where designed to be soldered at high temperatures, TI Pb-Free products are suitable for use in specified lead-free processes.
Pb-Free (RoHS Exempt): This component has a RoHS exemption for either 1) lead-based flip-chip solder bumps used between the die and package, or 2) lead-based die adhesive used between the die and leadframe. The component is otherwise considered Pb-Free (RoHS compatible) as defined above.
Green (RoHS & no Sb/Br): TI defines "Green" to mean Pb-Free (RoHS compatible), and free of Bromine (Br) and Antimony (Sb) based flame retardants (Br or Sb do not exceed 0.1% by weight in homogeneous material)

(3) MSL, Peak Temp. -- The Moisture Sensitivity Level rating according to the JEDEC industry standard classifications, and peak solder temperature.

Important Information and Disclaimer: The information provided on this page represents TI's knowledge and belief as of the date that it is provided. TI bases its knowledge and belief on information provided by third parties, and makes no representation or warranty as to the accuracy of such information. Efforts are underway to better integrate information from third parties. TI has taken and continues to take reasonable steps to provide representative and accurate information but may not have conducted destructive testing or chemical analysis on incoming materials and chemicals. TI and TI suppliers consider certain information to be proprietary, and thus CAS numbers and other limited information may not be available for release.

In no event shall TI's liability arising out of such information exceed the total purchase price of the TI part(s) at issue in this document sold by TI to Customer on an annual basis.

OTHER QUALIFIED VERSIONS OF DAC5662-EP :

- Catalog: DAC5662

NOTE: Qualified Version Definitions:

- Catalog - TI's standard catalog product

TAPE AND REEL INFORMATION

REEL DIMENSIONS

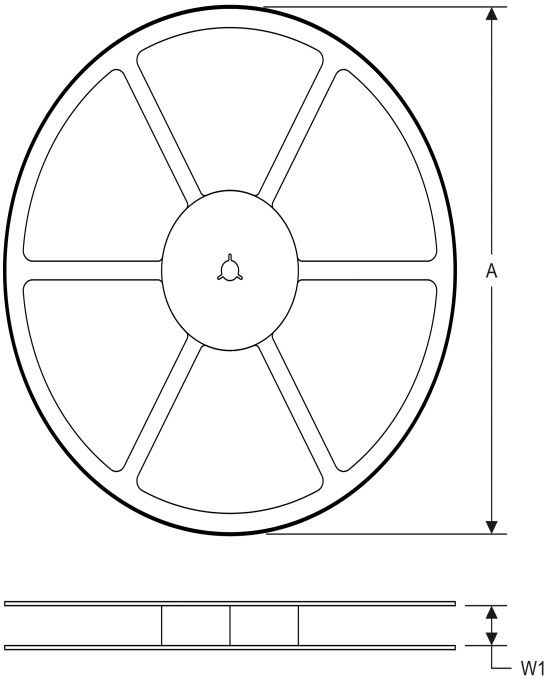

TAPE DIMENSIONS

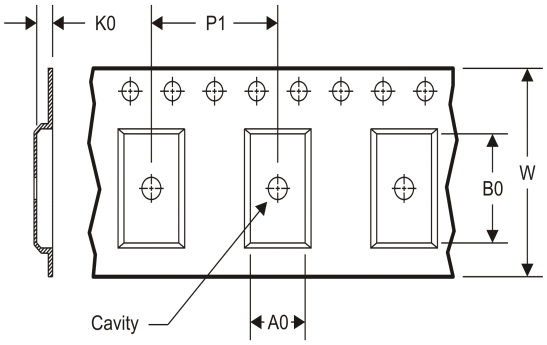

A0	Dimension designed to accommodate the component width
B0	Dimension designed to accommodate the component length
K0	Dimension designed to accommodate the component thickness
W	Overall width of the carrier tape
P1	Pitch between successive cavity centers

TAPE AND REEL INFORMATION

*All dimensions are nominal

Device	Package Type	Package Drawing	Pins	SPQ	Reel Diameter (mm)	Reel Width W1 (mm)	A0 (mm)	B0 (mm)	K0 (mm)	P1 (mm)	W (mm)	Pin1 Quadrant
DAC5662MPFBREP	TQFP	PFB	48	1000	330.0	16.4	9.6	9.6	1.5	12.0	16.0	Q2

TAPE AND REEL BOX DIMENSIONS

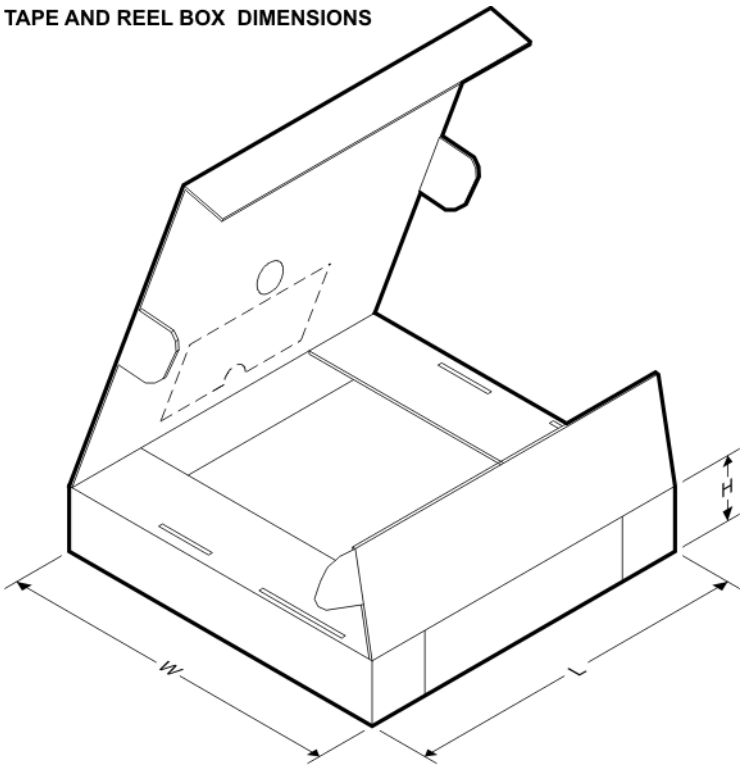

*All dimensions are nominal

Device	Package Type	Package Drawing	Pins	SPQ	Length (mm)	Width (mm)	Height (mm)
DAC5662MPFBREP	TQFP	PFB	48	1000	367.0	367.0	38.0

MTQF019A – JANUARY 1995 – REVISED JANUARY 1998

PFB (S-PQFP-G48) **PLASTIC QUAD FLATPACK**

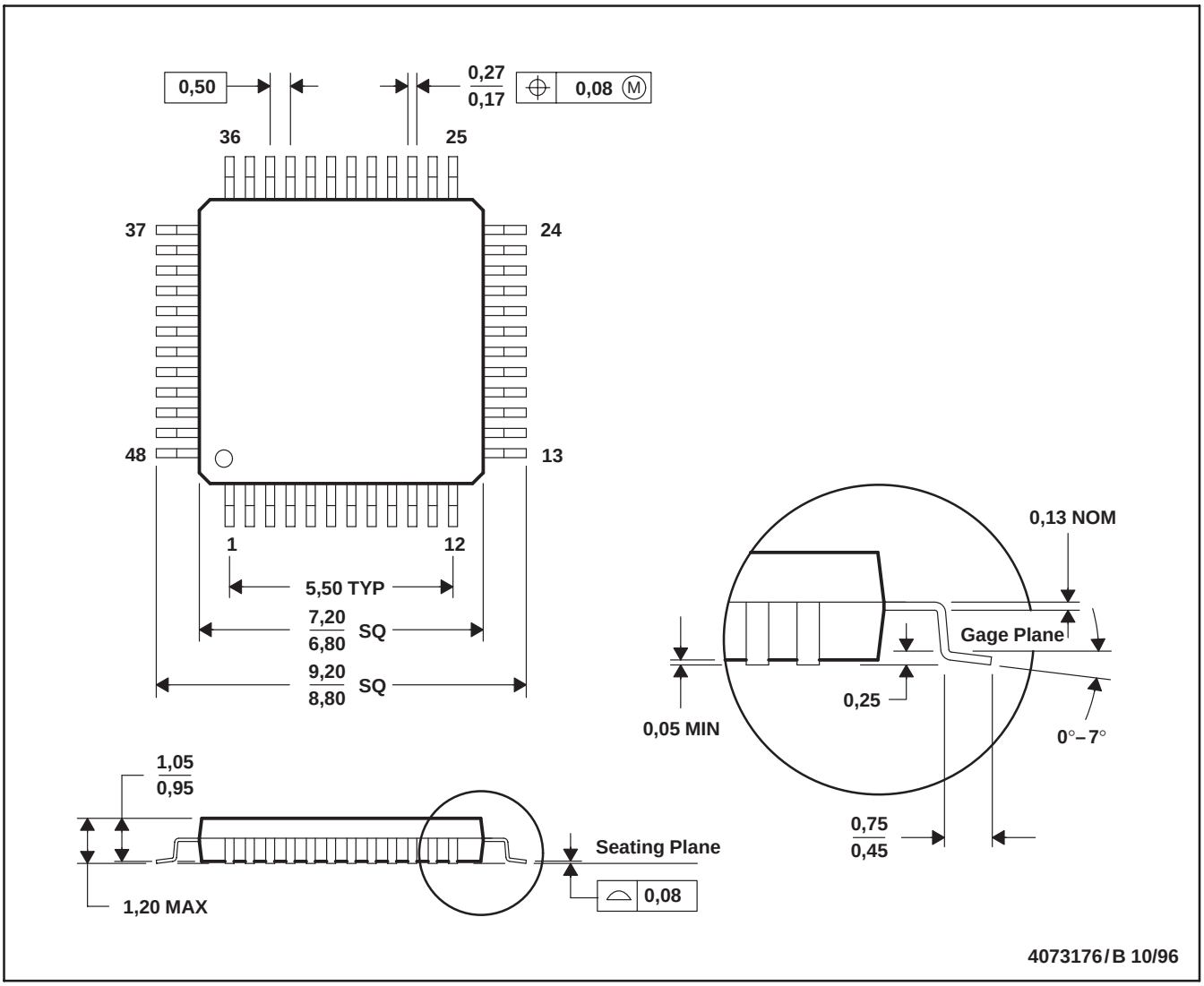

NOTES: A. All linear dimensions are in millimeters.
B. This drawing is subject to change without notice.
C. Falls within JEDEC MS-026

PFB (S–PQFP–G48)

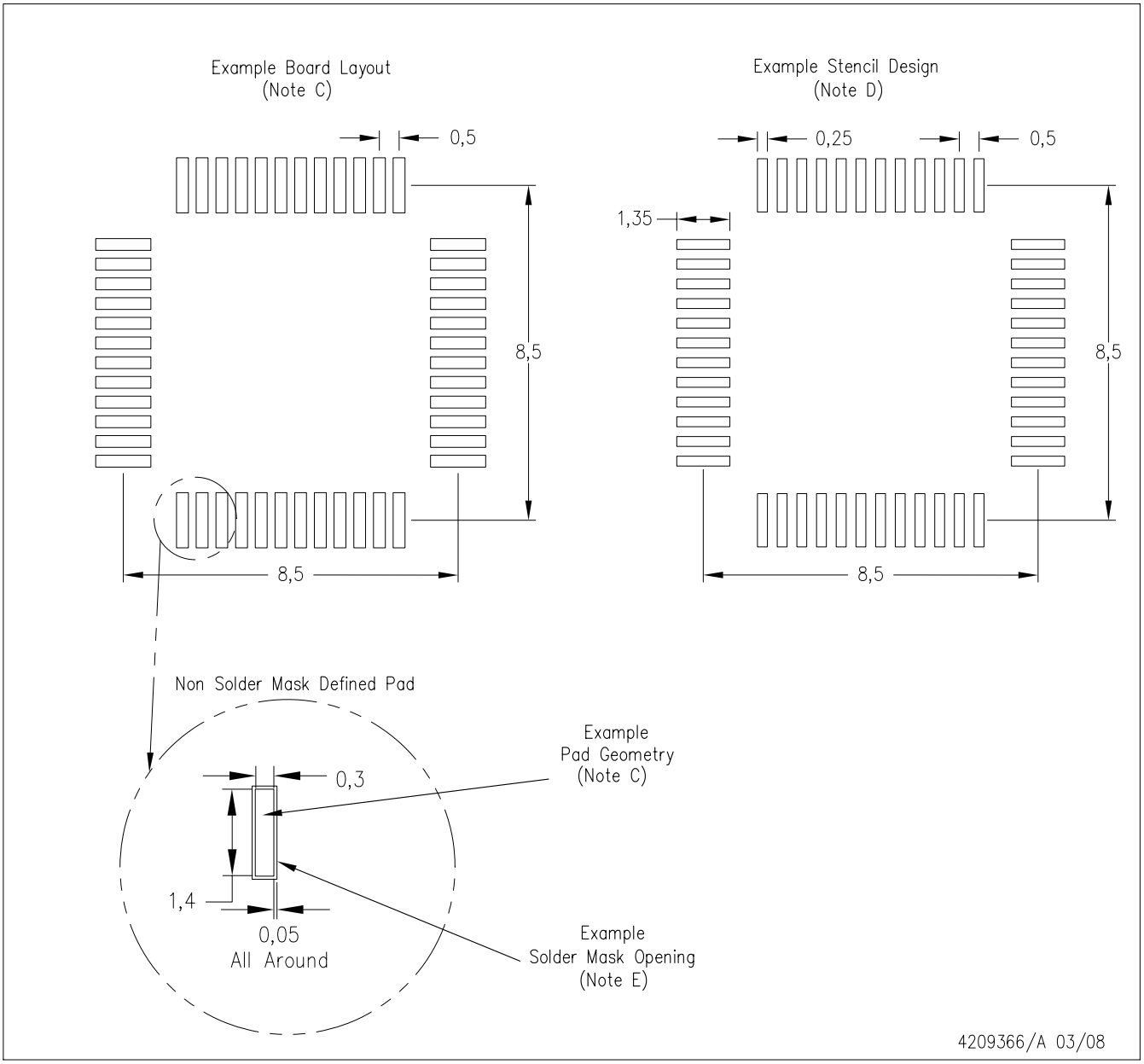

NOTES:
A. All linear dimensions are in millimeters.
B. This drawing is subject to change without notice.
C. Publication IPC–7351 is recommended for alternate designs.
D. Laser cutting apertures with trapezoidal walls and also rounding corners will offer better paste release. Customers should contact their board assembly site for stencil design recommendations. Refer to IPC–7525.
E. Customers should contact their board fabrication site for solder mask tolerances between and around signal pads.

IMPORTANT NOTICE

Texas Instruments Incorporated and its subsidiaries (TI) reserve the right to make corrections, enhancements, improvements and other changes to its semiconductor products and services per JESD46C and to discontinue any product or service per JESD48B. Buyers should obtain the latest relevant information before placing orders and should verify that such information is current and complete. All semiconductor products (also referred to herein as “components”) are sold subject to TI’s terms and conditions of sale supplied at the time of order acknowledgment.

TI warrants performance of its components to the specifications applicable at the time of sale, in accordance with the warranty in TI’s terms and conditions of sale of semiconductor products. Testing and other quality control techniques are used to the extent TI deems necessary to support this warranty. Except where mandated by applicable law, testing of all parameters of each component is not necessarily performed.

TI assumes no liability for applications assistance or the design of Buyers’ products. Buyers are responsible for their products and applications using TI components. To minimize the risks associated with Buyers’ products and applications, Buyers should provide adequate design and operating safeguards.

TI does not warrant or represent that any license, either express or implied, is granted under any patent right, copyright, mask work right, or other intellectual property right relating to any combination, machine, or process in which TI components or services are used. Information published by TI regarding third-party products or services does not constitute a license to use such products or services or a warranty or endorsement thereof. Use of such information may require a license from a third party under the patents or other intellectual property of the third party, or a license from TI under the patents or other intellectual property of TI.

Reproduction of significant portions of TI information in TI data books or data sheets is permissible only if reproduction is without alteration and is accompanied by all associated warranties, conditions, limitations, and notices. TI is not responsible or liable for such altered documentation. Information of third parties may be subject to additional restrictions.

Resale of TI components or services with statements different from or beyond the parameters stated by TI for that component or service voids all express and any implied warranties for the associated TI component or service and is an unfair and deceptive business practice. TI is not responsible or liable for any such statements.

Buyer acknowledges and agrees that it is solely responsible for compliance with all legal, regulatory and safety-related requirements concerning its products, and any use of TI components in its applications, notwithstanding any applications-related information or support that may be provided by TI. Buyer represents and agrees that it has all the necessary expertise to create and implement safeguards which anticipate dangerous consequences of failures, monitor failures and their consequences, lessen the likelihood of failures that might cause harm and take appropriate remedial actions. Buyer will fully indemnify TI and its representatives against any damages arising out of the use of any TI components in safety-critical applications.

In some cases, TI components may be promoted specifically to facilitate safety-related applications. With such components, TI’s goal is to help enable customers to design and create their own end-product solutions that meet applicable functional safety standards and requirements. Nonetheless, such components are subject to these terms.

No TI components are authorized for use in FDA Class III (or similar life-critical medical equipment) unless authorized officers of the parties have executed a special agreement specifically governing such use.

Only those TI components which TI has specifically designated as military grade or “enhanced plastic” are designed and intended for use in military/aerospace applications or environments. Buyer acknowledges and agrees that any military or aerospace use of TI components which have ***not*** been so designated is solely at the Buyer's risk, and that Buyer is solely responsible for compliance with all legal and regulatory requirements in connection with such use.

TI has specifically designated certain components which meet ISO/TS16949 requirements, mainly for automotive use. Components which have not been so designated are neither designed nor intended for automotive use; and TI will not be responsible for any failure of such components to meet such requirements.

Products		**Applications**	
Audio	www.ti.com/audio	Automotive and Transportation	www.ti.com/automotive
Amplifiers	amplifier.ti.com	Communications and Telecom	www.ti.com/communications
Data Converters	dataconverter.ti.com	Computers and Peripherals	www.ti.com/computers
DLP® Products	www.dlp.com	Consumer Electronics	www.ti.com/consumer-apps
DSP	dsp.ti.com	Energy and Lighting	www.ti.com/energy
Clocks and Timers	www.ti.com/clocks	Industrial	www.ti.com/industrial
Interface	interface.ti.com	Medical	www.ti.com/medical
Logic	logic.ti.com	Security	www.ti.com/security
Power Mgmt	power.ti.com	Space, Avionics and Defense	www.ti.com/space-avionics-defense
Microcontrollers	microcontroller.ti.com	Video and Imaging	www.ti.com/video
RFID	www.ti-rfid.com		
OMAP Mobile Processors	www.ti.com/omap	**TI E2E Community**	e2e.ti.com
Wireless Connectivity	www.ti.com/wirelessconnectivity		

Mailing Address: Texas Instruments, Post Office Box 655303, Dallas, Texas 75265
Copyright © 2012, Texas Instruments Incorporated