User's Guide

SLAU790A–October 2018–Revised December 2018

DAC53608 Evaluation Module

This user's guide describes the characteristics, operation, and use of the DAC53608 evaluation module (EVM). This document also discusses the proper setup and configuration of both software and hardware, and reviews various aspects of program operation. Throughout this document, the terms evaluation board, evaluation module, and EVM are synonymous with the DAC53608EVM. A complete circuit description, schematic diagram, and bill of materials are also included in this document.

Contents

1 Overview 3
2 System Setup 4
3 Detailed Description 9
4 Schematic, PCB Layout, and Bill of Materials 20

List of Figures

1 DAC53608EVM Software Setup 4
2 Software Installation Path 5
3 TI Cloud Agent Installation 6
4 Analog EVM Controller Setup 6
5 Hardware Setup 7
6 Hardware Setup Guidelines 8
7 BOOSTXL-DAC-PORT Hardware Block Diagram 9
8 DAC53608EVM Hardware Block Diagram 12
9 DAC53608EVM GUI Location 14
10 DAC53608EVM GUI Connection Detection 14
11 Software Home Page 15

Copyright © 2018, Texas Instruments Incorporated

12 Setup Page 16
13 DAC Quick Start Page 17
14 Register Map Page 18
15 Register Page Options 18
16 Collateral Page 19
17 BOOSTXL-DAC-PORT Schematic Page 1 21
18 BOOSTXL-DAC-PORT Schematic Page 2 22
19 DAC53608EVM Schematic 23
20 BOOSTXL-DAC-PORT PCB Components Layout 25
21 BOOSTXL-DAC-PORT Top Layer 25
22 BOOSTXL-DAC-PORT Bottom Layer 26
23 DAC53608EVM PCB Components Layout 26
24 DAC53608EVM Layers 27

List of Tables

1 Contents of DAC53608EVM Kit 3
2 Required Components not Part of the Kit 3
3 Related Documentation 3
4 DAC53608EVM Power Supply Inputs 7
5 BOOSTXL-DAC-PORT Jumper Settings 7
6 BOOSTXL-DAC-PORT J13 Pin Definitions 10
7 BOOSTXL-DAC-PORT J14 Pin Definitions 10
8 BOOSTXL-DAC-PORT J4 Pin Definitions 11
9 BOOSTXL-DAC-PORT J5 Pin Definitions 11
10 BOOSTXL-DAC-PORT J12 Pin Definitions 12
11 DAC53608EVM J2 Pin Definitions 13
12 DAC53608EVM J1 Pin Definitions 13
13 BOOSTXL-DAC-PORT Bill of Materials 28
14 DAC53608EVM Bill of Materials 30

Trademarks

Windows is a trademark of Microsoft Corporation.
All other trademarks are the property of their respective owners.

Copyright © 2018, Texas Instruments Incorporated

1 Overview

The DAC53608EVM is an easy to use platform for evaluating the functionality and performance of the DAC53608 device. The DAC53608 and DAC43608 are a pin-compatible family of eight-channel, buffered voltage-output digital-to-analog converters (DACs) that have 10-bit and 8-bit resolution. The external reference range of 1.8 V to 5.5 V gives full scale output voltage of 1.8 V to 5.5 V. These devices are monotonic across the power supply range. The devices communicate through an I2C interface. These devices support I2C standard mode (100 kbps), fast mode (400 kbps), and fast+ mode (1 Mbps). These devices have a load DAC ($\overline{\text{LDAC}}$) pin that allows simultaneous DAC updates. The EVM provides the GPIO and I2C programming interface using a PC-based graphical user interface (GUI).

1.1 Kit Contents

Table 1 details the contents of the EVM kit. Contact the TI Product Information Center nearest you if any component is missing. TI highly recommends that the user verify latest versions of the related software at the TI website, www.ti.com.

Table 1. Contents of DAC53608EVM Kit

Item	Quantity
DAC53608EVM evaluation board PCB	1

Table 2. Required Components not Part of the Kit

Item	Quantity
BOOSTXL-DAC-PORT	1
MSP-EXP432E401Y Launchpad (Analog EVM Controller)	1

The Analog EVM Controller can be purchased from this page on www.ti.com.

1.2 Related Documentation from Texas Instruments

The following document provides information regarding Texas Instruments integrated circuits used in the assembly of the DAC53608EVM. This user's guide is available from the TI web site under literature number SLAU790. Any letter appended to the literature number corresponds to the document revision that is current at the time of the writing of this document. Newer revisions may be available from the TI web site at http://www.ti.com/, or call the Texas Instruments Literature Response Center at (800) 477-8924 or the Product Information Center at (972) 644-5580. When ordering, identify the document by both title and literature number.

Table 3. Related Documentation

Document	Literature Number
DAC53608 product data sheet	SLASEQ4

Copyright © 2018, Texas Instruments Incorporated

2 System Setup

2.1 Software Setup

This section provides the procedure for EVM software installation.

2.1.1 Operating Systems

The EVM software is compatible with the Windows™ 7, Windows 8, and Windows 10 operating systems.

2.1.2 Software Installation

The software is available on the product folder. It can also be found on GUI Composer Gallery. Search for "DAC53608EVM" on the GUI Composer Gallery. Use the down arrow symbol to download the software. There are two downloads: one DAC53608EVM GUI and another, GUI Composer Runtime. You can either download both the software or just download the EVM GUI. The runtime can be downloaded through the EVM GUI during installation. Note that the software can also be run online by clicking on it. But this is not recommended unless you have the firmware and driver upgraded. After the software is downloaded onto the PC, navigate to the download folder and run the DAC53608EVM software executable, as shown in Figure 1. When the DAC53608EVM software is launched, an installation dialog window opens and prompts the user to select an installation directory. If left unchanged, the software location defaults to *C:\Program Files (x86)\Texas Instruments\DAC53608 EVM* as shown in Figure 2. In case there is no previous installation of the GUI Composer Runtime, the installer will also ask for automatic download from the web. Select to install.

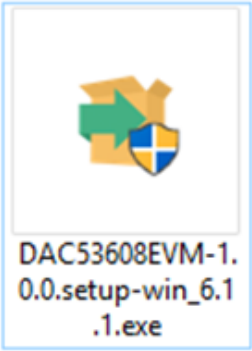

Figure 1. DAC53608EVM Software Setup

The software installation automatically copies the required files and drivers to the local machine.

Copyright © 2018, Texas Instruments Incorporated

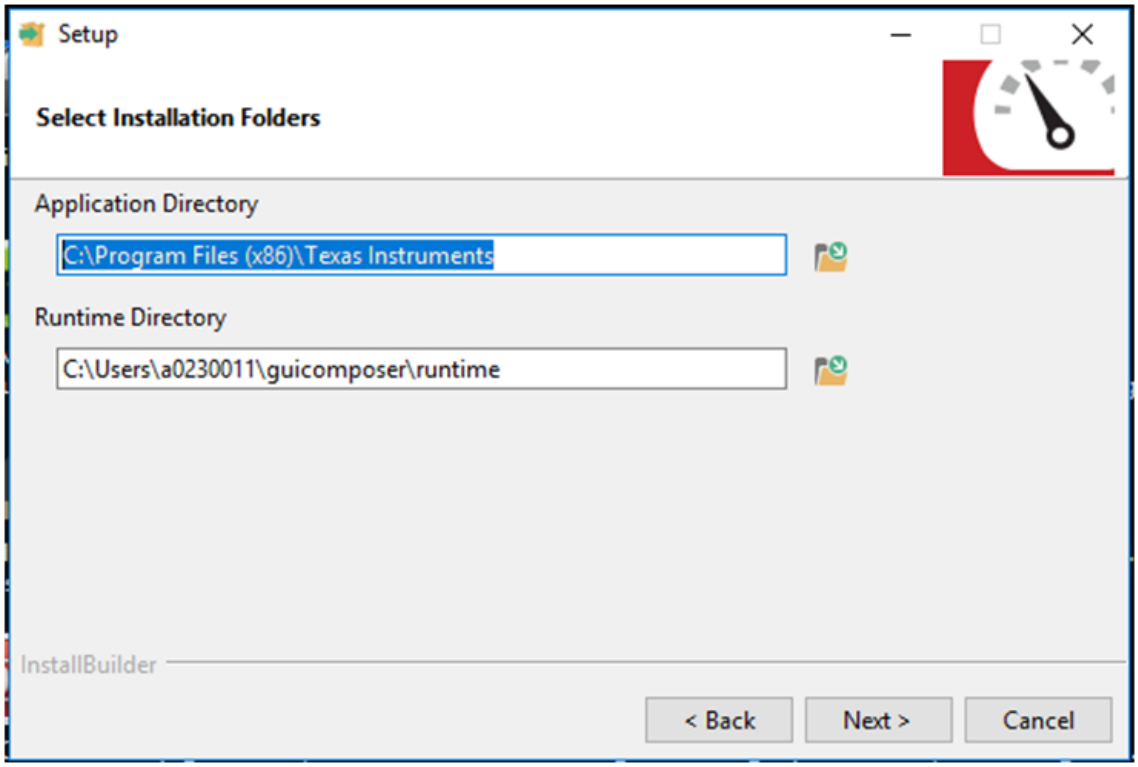

Figure 2. Software Installation Path

2.1.3 Analog EVM Controller Firmware Upgrade

The firmware for the Analog EVM Controller needs to be upgraded for the first time before using the software. A jumper modification needs to be done and the USB cable should be connected to the XDS110 port of the Analog EVM Controller for downloading firmware. The firmware can be downloaded to the Analog EVM Controller using the online tool UniFlash. This link is also provided on the *Setup* page of the GUI. The firmware bin file can be found at *"<Download Directory>\DAC53608EVM_1.0.1_installer_win\install_image_DAC53608EVM\DAC53608EVM\firmware\ac ctrl.0.3.0.3.bin"* after unzipping the file *install_image_DAC53608EVM.zip*.

Follow the step-by-step procedure below to upgrade the firmware and install the device drivers successfully:

- Remove jumper JP6 on Analog EVM Controller as shown in step 1 of Figure 4
- Mount jumper on *5V-OTG*. The jumper on *5V-XDS* should be retained as shown in step 1 of Figure 4
- Connect the USB cable to the port on the XDS110 side of the board as shown in step 2 of Figure 4
- Connect the USB cable to PC and open UniFlash. Click on *Start Now* in the *Detect Device* section
- In case the GUI Composer framework is being installed for the first time on the PC, the browser extension and the *TI Cloud Agent* need to be installed. Follow the 2-step installation flow prompted on the web page as shown in Figure 3

Copyright © 2018, Texas Instruments Incorporated

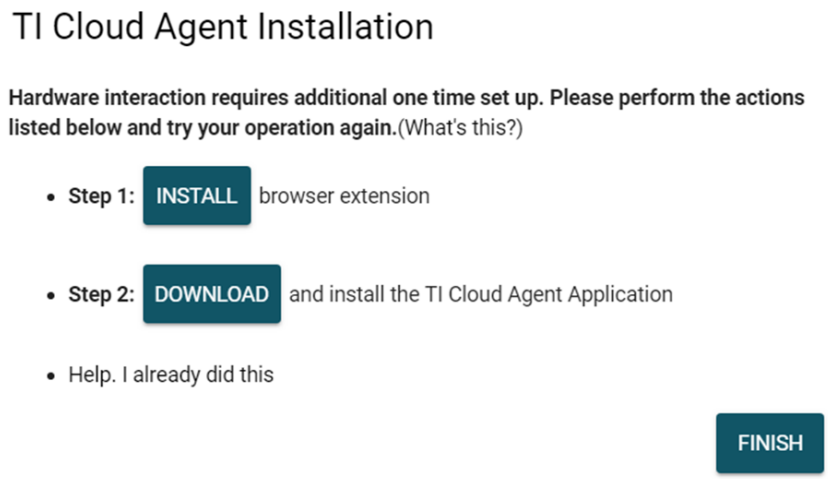

Figure 3. TI Cloud Agent Installation

- Press the *Refresh* or *Finish* button after the installation. This should detect the Launchpad
- Press *Start* and browse for *"<Download Directory>\DAC53608EVM_1.0.1_installer_win\install_image_DAC53608EVM\DAC53608EVM\firmware\acctrl.0.3.0.3.bin"*. Press *Load Image* followed by *Verify Image*
- Once the firmware is loaded, remove the USB cable from the XDS110 port and connect to the port U7 as shown in step 4 of Figure 4. U7 is available near the RJ-45 connector on the board
- Open *Control Panel-->Device Manager* and you will find two new ports, probably with the name of *Virtual COM Port* or some other generic names
- Right click on each one and select *Update Driver* and link them to the driver file inside the *"<Download Directory>\DAC53608EVM_1.0.1_installer_win\install_image_DAC53608EVM\DAC53608EVM\driver"* directory. This will enumerate the ports as *ACCtrl* and *ACCtrl Console* inside *Ports (COM & LPT)*. The serial port connection is done to the **ACCtrl** port as discussed later in the document.

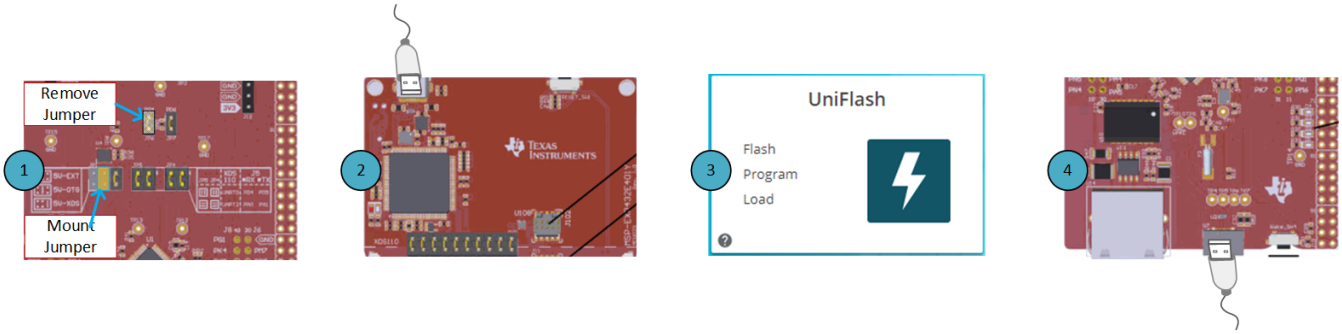

Figure 4. Analog EVM Controller Setup

Copyright © 2018, Texas Instruments Incorporated

2.2 Hardware Setup

This section provides the overall system setup for the EVM. The hardware setup contains the Analog EVM Controller (MSP-EXP432E401Y Launchpad), BOOSTXL-DAC-PORT, and DAC53608EVM. A PC runs software that provides an interface to the DAC53608EVM through the Analog EVM Controller. The Analog EVM Controller generates 5V power that can be used as VDD for the DAC. It also generates a 3.3V power that can be used for I2C pull-ups. The IO ports of Analog EVM Controller and level translators used on the BOOSTXL-DAC-PORT and DAC53608EVM can withstand a maximum of 3.6V IO levels. The Analog EVM Controller also generates digital signals used to communicate with the EVM board. The BOOSTXL-DAC-PORT is a generic platform used for catalog DACs. It provides a predefined interface to connect a DAC evaluation module. It provides various options for power supply, reference, and digital signals. A connector is provided on the BOOSTXL-DAC-PORT for external power supplies. This platform is designed to host additional boards stacked up on the BOOSTXL-DAC-PORT in order to provide extended functions. Figure 5 displays the system setup for the DAC53608EVM.

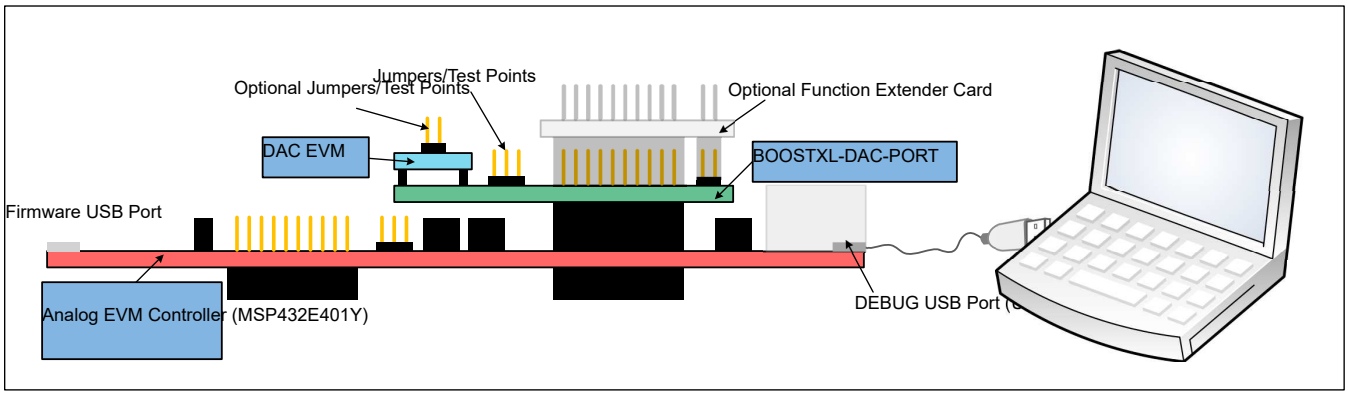

Figure 5. Hardware Setup

2.2.1 Power Configurations and Jumper Settings

The DAC53608EVM provides electrical connections to the device supply pins. The connectors and optional configurations are shown in the Table 4. The jumper settings on the BOOSTXL-DAC-PORT are crucial to the proper functioning of the DAC53608EVM. Table 5 provides the details of the possible jumper settings on BOOSTXL-DAC-PORT.

Table 4. DAC53608EVM Power Supply Inputs

DAC53608EVM Connector/Pin	Supply Name	Voltage Range
J2.1	VDD	1.8V to 5.5V (5V Available on Analog EVM Controller), Jumper J9.1-2 on BOOSTXL-DAC-PORT
J1.8	VIO	1.8V to 3.6V (3.3V Available on Analog EVM Controller), Jumper J10.1-2 on BOOSTXL-DAC-PORT
J1.7	DAC_VIO	1.8V to 3.6V, Jumper J11.1-2 on BOOSTXL-DAC-PORT
J1.1	GND	0 V

Table 5. BOOSTXL-DAC-PORT Jumper Settings

Jumper	Default Position	Available Option	Description
J3	1-2: On-board Reference	2-3: External Reference	External or On-board Reference Selection
J6	2-3: Zener Reference	1-2: VDD Reference	Zener or VDD Reference
J7	2-3: 2.5V Reference	1-2: 5V Reference	2.5V or 5V Reference Selection
J8	2-3: Unused on DAC53608	1-2: Unused on DAC53608	External or On-board $\overline{\text{LDAC}}$ Selection
J9	1-2: 5V from Launchpad	2-3: External VDD	5V or External VDD

Copyright © 2018, Texas Instruments Incorporated

Table 5. BOOSTXL-DAC-PORT Jumper Settings (continued)

Jumper	Default Position	Available Option	Description
J10	1-2: 3.3V from Launchpad	2-3: External VIO	3.3V or External VIO
J11	Closed: DAC_VIO is connected to VIO	Open: DAC_VIO OFF	DAC_VIO ON/OFF

2.2.2 Connecting the Hardware

Once the Analog EVM Controller firmware is upgraded as described in Section 2.1.3 and power and jumper configurations done as per Section 2.2.1, the BOOSTXL-DAC-PORT, and DAC53608EVM can be connected as shown in Figure 6. Connect the USB cable from the Analog EVM Controller DEBUG Port (U7) to the PC.

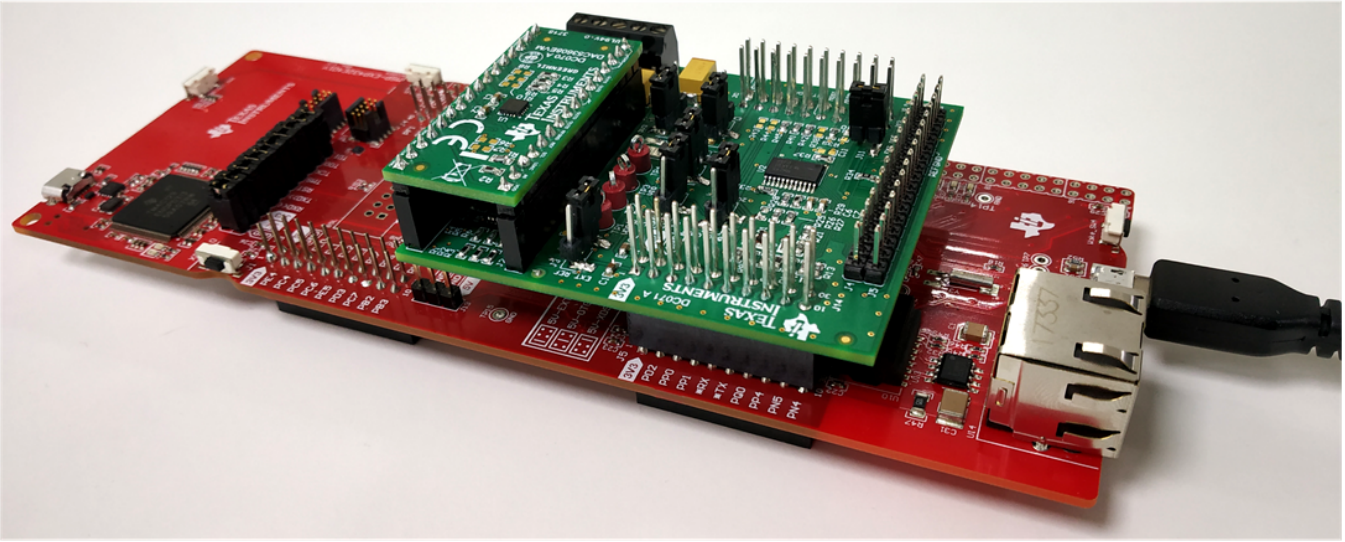

Figure 6. Hardware Setup Guidelines

2.2.3 Electrostatic Discharge Warning

Many of the components on the DAC53608EVM are susceptible to damage by electrostatic discharge (ESD). Observe proper ESD handling precautions when unpacking and handling the EVM, including the use of a grounded wrist strap at an approved ESD workstation.

Copyright © 2018, Texas Instruments Incorporated

3 Detailed Description

3.1 Hardware Description

The following sections provide detailed information on the EVM hardware and jumper configuration settings.

3.1.1 Theory of Operation for BOOSTXL-DAC-PORT

The BOOSTXL-DAC-PORT is a generic evaluation platform for catalog DACs, which provide various options for power supply, reference, communication interfaces, and GPIO for a DAC EVM. The DAC EVM interfaces with a predefined set of signals common to a precision DAC. The block diagram of this board is shown in Figure 7.

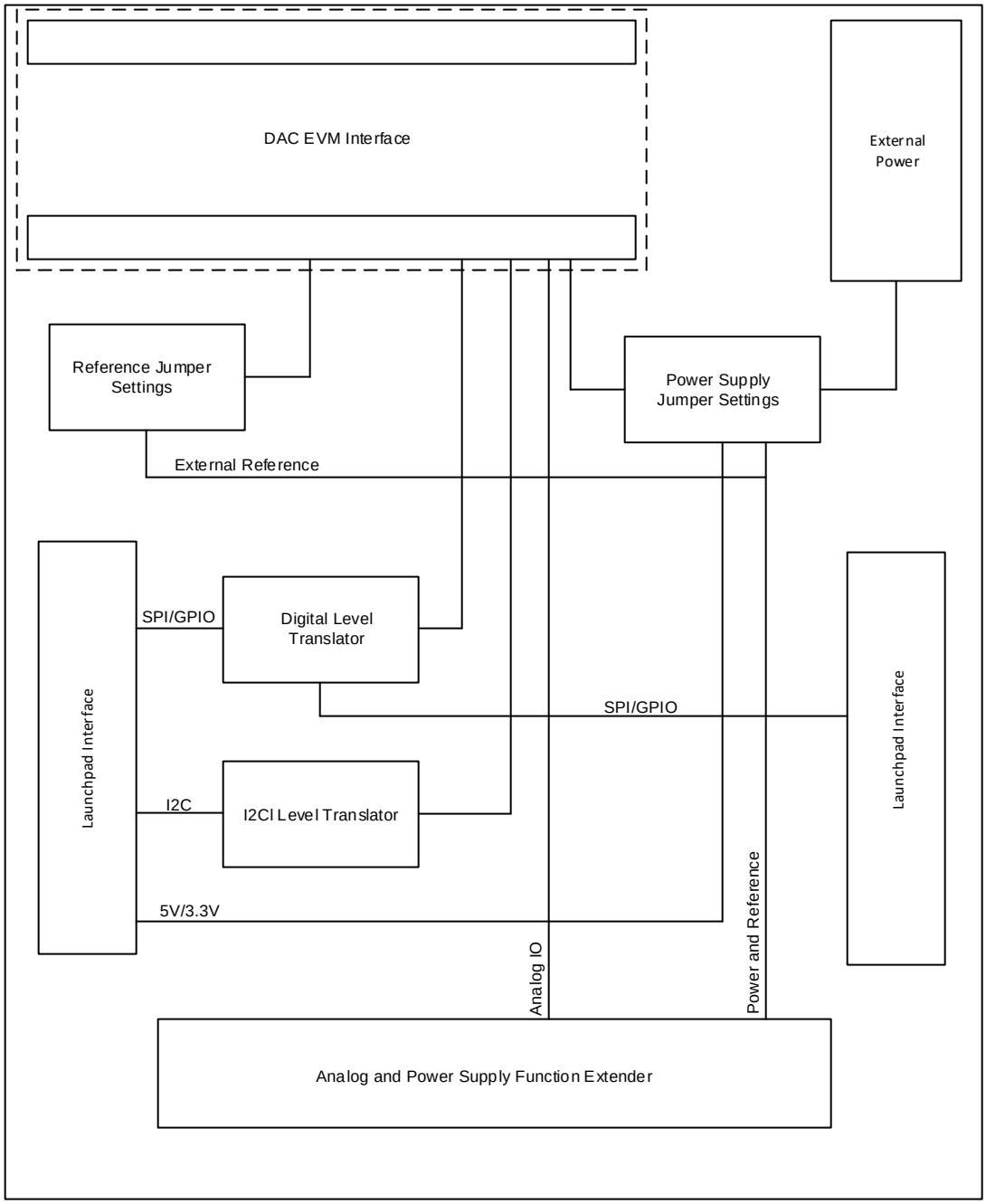

Figure 7. BOOSTXL-DAC-PORT Hardware Block Diagram

Copyright © 2018, Texas Instruments Incorporated

3.1.2 Signal Definition of BOOSTXL-DAC-PORT

The BOOSTXL-DAC-PORT provides hardware connectors for the Analog EVM Controller (J13, J14), External Power (J12), DAC53608EVM (J1, J2), and External Function Extender (J4, J5). The descriptions are provided in the following tables.

Table 6. BOOSTXL-DAC-PORT J13 Pin Definitions

Pin#	Signal	Description
11	GPIO	General purpose I/O
12	$\overline{CS}$	SPI $\overline{CS}$ or General purpose I/O
13	GPIO	SPI
14	MISO	SPI MISO
15	MOSI	SPI MOSI
16	$\overline{RST}$	MCU Reset Output
17	GPIO	General purpose I/O
18	GPIO	General purpose I/O
19	GPIO	General purpose I/O
20	GND	Ground
31	GPIO	General purpose I/O
32	GPIO	General purpose I/O
33	GPIO	General purpose I/O
34	GPIO	General purpose I/O
35	EXT_LDAC	External LDAC I/O
36	EXT_LDAC	External LDAC I/O
37	SPI_BUF_EN	Digital, SPI Buffer Enable
38	GPIO	General purpose I/O
39	GPIO	General purpose I/O
40	GPIO	General purpose I/O

Table 7. BOOSTXL-DAC-PORT J14 Pin Definitions

Pin#	Signal	Description
1	+3.3V	+3.3V Power Supply
2	GPIO	General purpose I/O
3	GPIO	General purpose I/O
4	GPIO	General purpose I/O
5	GPIO	General purpose I/O
6	GPIO	General purpose I/O
7	SCLK_A0	SPI SCLK or I2C A0
8	GPIO	General purpose I/O
9	SCL	I2C SCL
10	SDA	I2C SDA
21	+5V	+5V Power Supply
22	GND	Ground
23	GPIO	General purpose I/O
24	GPIO	General purpose I/O
25	VDD_SENSE	Sense Input for VDD
26	VIO_SENSE	Sense Input for VIO
27	GPIO	General purpose I/O
28	GPIO	General purpose I/O

Copyright © 2018, Texas Instruments Incorporated

Table 7. BOOSTXL-DAC-PORT J14 Pin Definitions (continued)

Pin#	Signal	Description
29	GPIO	General purpose I/O
30	GPIO	General purpose I/O

Table 8. BOOSTXL-DAC-PORT J4 Pin Definitions

Pin#	Signal	Description
1	AIO0	Analog I/O
2	AGND	Analog Ground
3	AIO2	Analog I/O
4	AIO4	Analog I/O
5	AGND	Analog Ground
6	AIO6	Analog I/O
7	AIO8	Analog I/O
8	AGND	Analog Ground
9	AIO10	Analog I/O
10	AIO12	Analog I/O
11	AGND	Analog Ground
12	AIO14	Analog I/O
13	EXT_REF	External Reference Input
14	GND	Ground
15	VCC	VCC Output
16	VDD	VDD Output

Table 9. BOOSTXL-DAC-PORT J5 Pin Definitions

Pin#	Signal	Description
1	AIO1	Analog I/O
2	AGND	Analog Ground
3	AIO3	Analog I/O
4	AIO5	Analog I/O
5	AGND	Analog Ground
6	AIO7	Analog I/O
7	AIO9	Analog I/O
8	AGND	Analog Ground
9	AIO11	Analog I/O
10	AIO13	Analog I/O
11	AGND	Analog Ground
12	AIO15	Analog I/O
13	REFGND	External Reference Ground
14	GND	Ground
15	VSS	VSS Output
16	VIO or DAC_VIO	VIO or DAC_VIO Output

Copyright © 2018, Texas Instruments Incorporated

Table 10. BOOSTXL-DAC-PORT J12 Pin Definitions

Pin#	Signal	Description
1	VCC	High Voltage Positive Power Supply
2	VSS	High Voltage Negative Power Supply
3	GND	Ground
4	EXT_VDD	External VDD
5	EXT_VIO	External VIO

3.1.3 Theory of Operation for DAC53608EVM Hardware

The block diagram of the DAC53608EVM board is displayed in Figure 8. The EVM board connects to BOOSTXL-DAC-PORT with two 16-pin connectors. These headers provide access to all DAC pins. The EVM board also houses an EEPROM and an I2C buffer.

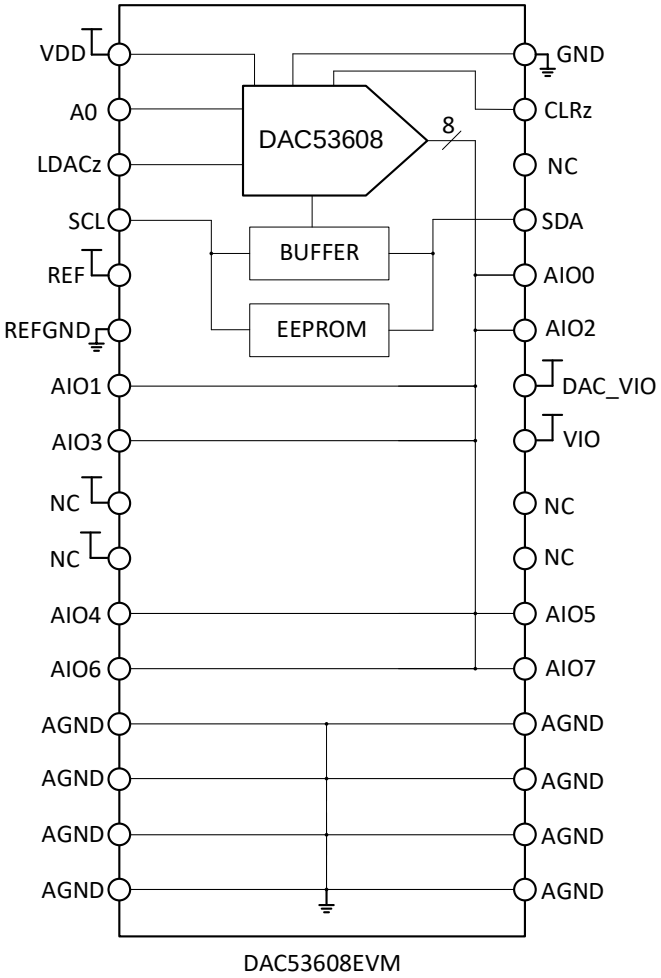

Figure 8. DAC53608EVM Hardware Block Diagram

3.1.4 Signal Definition of DAC53608EVM

The DAC53608EVM provides access to all DAC pins through connection J1 and J2, as listed in Table 11 and Table 12.

Copyright © 2018, Texas Instruments Incorporated

Table 11. DAC53608EVM J2 Pin Definitions

Pin#	Signal	Description
1	VDD	VDD Power Supply
2	A0	I2C Address Select
3	$\overline{\text{LDAC}}$	Load DAC
4	SCL	I2C SCL
5	REF	Reference Input
6	REFGND	Reference Ground
7	VOUTB	DAC Output Channel B
8	VOUTD	DAC Output Channel D
9	NC	Not connected
10	NC	Not connected
11	VOUTE	DAC Output Channel E
12	VOUTG	DAC Output Channel G
13	AGND	Analog Ground
14	AGND	Analog Ground
15	AGND	Analog Ground
16	AGND	Analog Ground

Table 12. DAC53608EVM J1 Pin Definitions

Pin#	Signal	Description
1	GND	PCB Ground
2	$\overline{\text{CLR}}$	$\overline{\text{CLR}}$ Input
3	NC	Not connected
4	SDA	I2C SDA
5	VOUTA	DAC Output Channel A
6	VOUTC	DAC Output Channel C
7	DAC_VIO	Pull-up for DAC I2C Signals
8	VIO	Power Supply for EEPROM
9	NC	Not connected
10	NC	Not connected
11	VOUTE	DAC Output Channel E
12	VOUTH	DAC Output Channel H
13	AGND	Analog Ground
14	AGND	Analog Ground
15	AGND	Analog Ground
16	AGND	Analog Ground

Copyright © 2018, Texas Instruments Incorporated

3.2 Software Description

This section describes the features of the DAC53608 EVM software, and discusses how to use these features. The software provides basic control of all the registers and functions to the DAC53608 device.

3.2.1 Starting the Software

To launch the software, locate the Texas Instruments folder in the *All Programs* menu, and select the *DAC53608 EVM* icon.

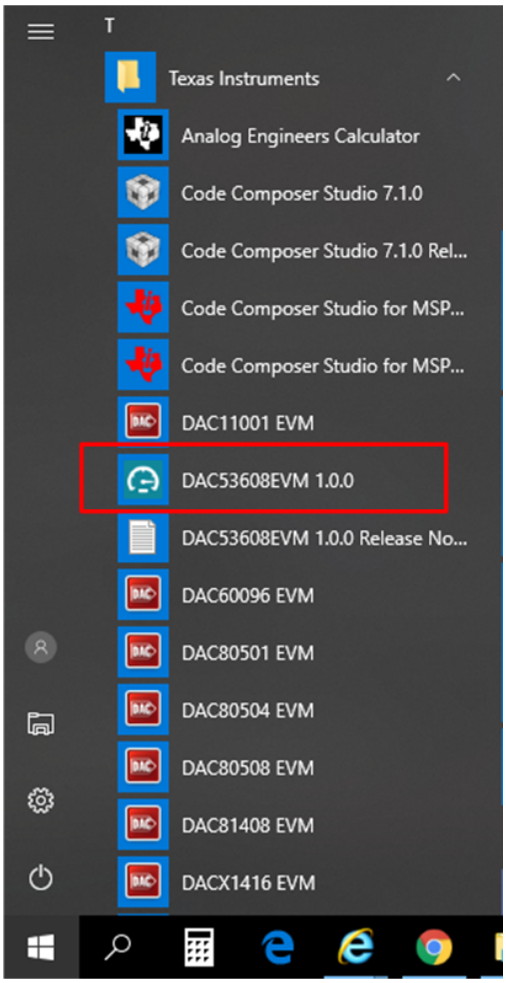

Figure 9. DAC53608EVM GUI Location

Figure 10 shows that if the Analog EVM Connector is correctly connected, the status bar at the bottom of the screen displays *Hardware Connected*. If the Analog EVM Controller is not properly connected or not connected at all, the status bar displays *Hardware not connected*. In case the *Hardware not connected* status persists even after the hardware is connected, go to *Options-->Serial Port* and select the correct port. On *Start Menu-->Control Panel-->Device manager*, this port will be listed under *PORTS (COM & LPT)* as **ACCtrl (COMx)**. Do not select the port that is listed as *ACCtrl Console (COMx)*.

Figure 10. DAC53608EVM GUI Connection Detection

Copyright © 2018, Texas Instruments Incorporated

3.2.2 Software Features

The DAC53608 EVM incorporates interactive functions that help configure the DAC53608 device. These functions are built into several GUI pages, as shown in the following sections. The *Menu* allows the user to switch between the pages, with each page representing a feature of the software.

3.2.2.1 Home Page

This page shown inFigure 11 provides the basic information and navigation to other pages. Click on *Learn More...* to get more information on the device.

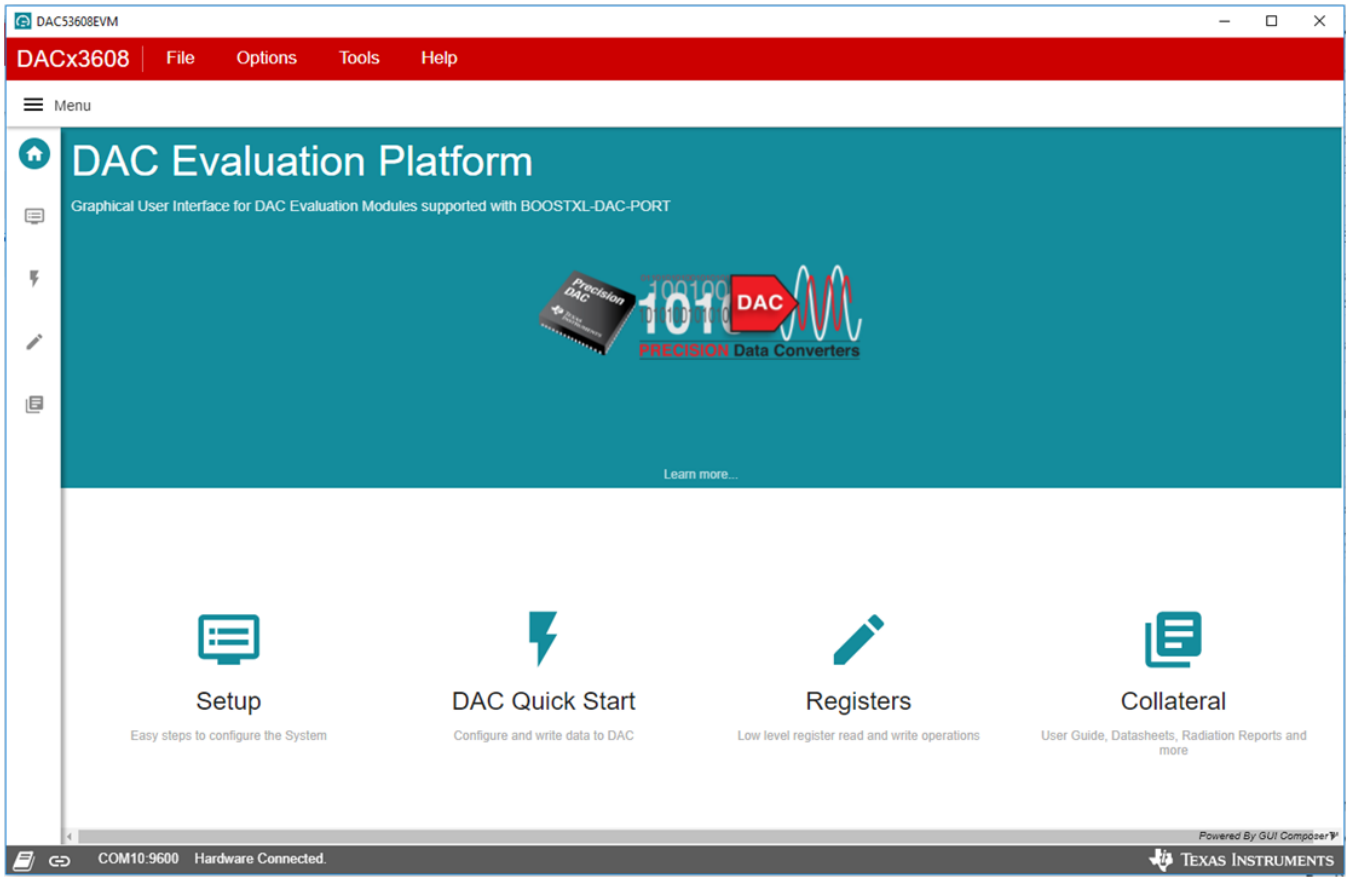

Figure 11. Software Home Page

3.2.2.2 Setup Page

This page shown in Figure 12 guides the user to perform one time firmware upgrade for Analog EVM Controller and details of how the Analog EVM Controller, BOOSTXL-DAC-PORT, and DAC53608EVM are stacked. It also shows the default jumper settings for BOOSTXL-DAC-PORT.

Copyright © 2018, Texas Instruments Incorporated

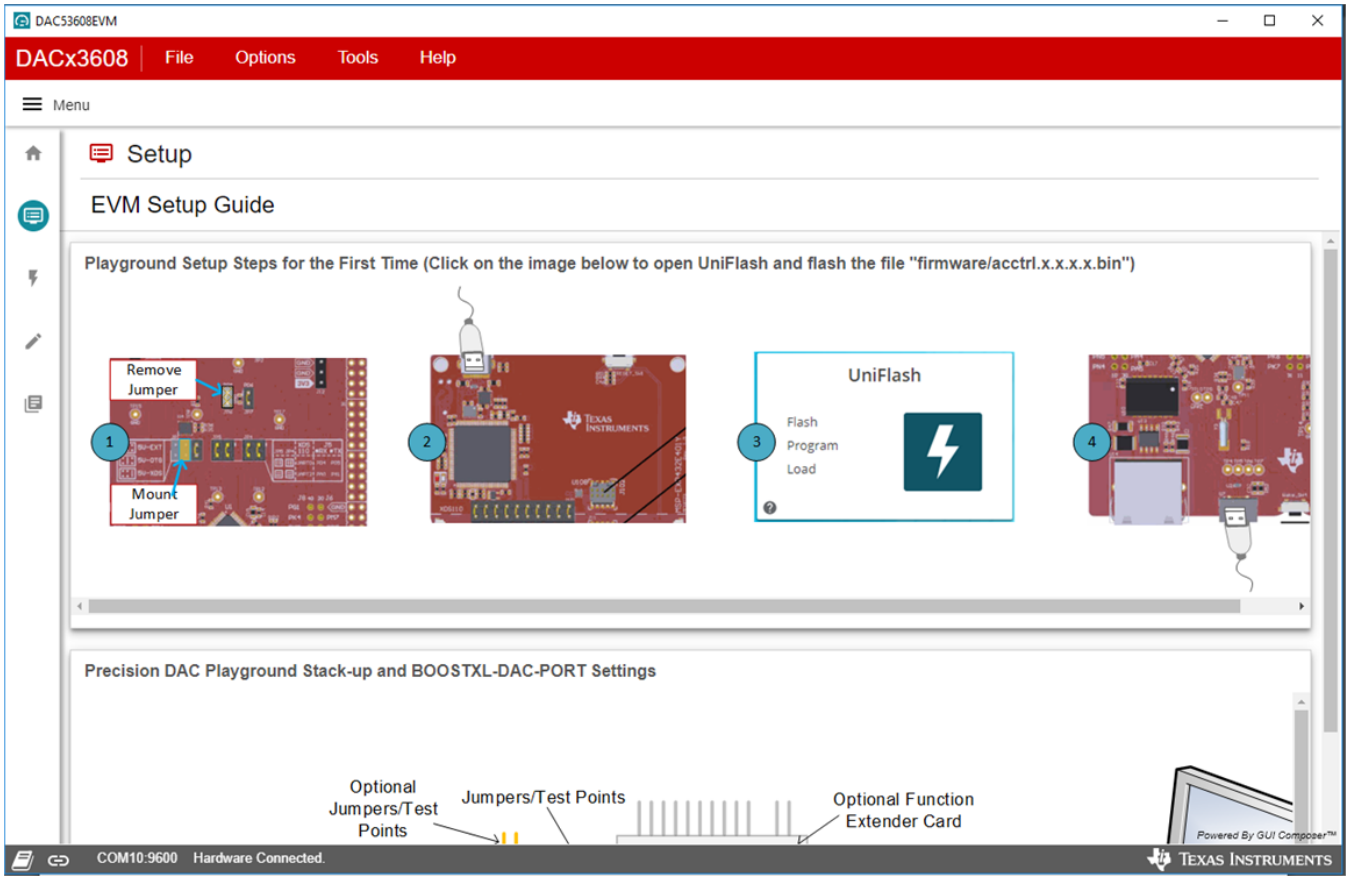

Figure 12. Setup Page

3.2.2.3 DAC Quick Start Page

This page shown in Figure 13 provides an interface to quickly enable and set the output voltages on all channels of DAC53608. The toggle switch toggles between power up and power down bits for respective channels. **The grayed out buttons represent a logic LOW on the respective bits. That corresponds to power up.** The DAC53608 comes in power down mode by default. The toggle switches need to be made off (Gray) to bring respective DAC channels out of power down. The number boxes program the corresponding code on the DAC data register. Note that the DAC data registers are *WRITE ONLY*. Every Write operation on this GUI is followed by a read back. Hence, the data registers will show "0" after the Write operation. This behavior is normal and is expected for all fields that are *WRITE ONLY*. The broadcast field is used for powering up/down all channels and also to broadcast a common DAC code.

Note that no general purpose IO controls for A0, $\overline{\text{LDAC}}$, and $\overline{\text{CLR}}$ pins have been provided on this version of the software. The default condition for A0 is LOW, $\overline{\text{LDAC}}$ is low and $\overline{\text{CLR}}$ is HIGH. For changing the behavior of these pins, they should be manually tied to VIO or GND.

Copyright © 2018, Texas Instruments Incorporated

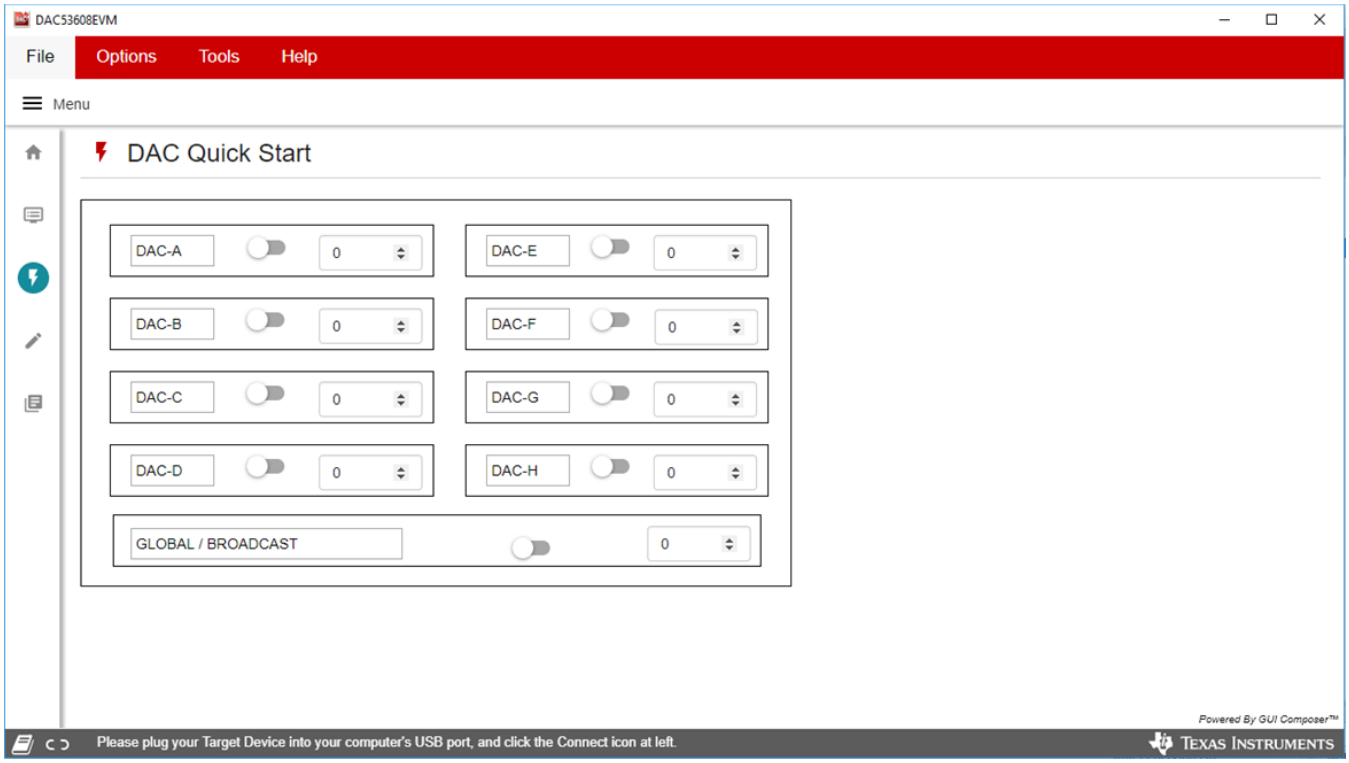

Figure 13. DAC Quick Start Page

3.2.2.4 Register Map Page

The DAC53608 EVM *Register Map* page, shown in Figure 14, allows the user to access low level communication directly with the DAC53608 registers. Selecting a register on the *Register Map* list shows a description of the values in that register, as well as information on the register address, default value, size, and current value. Values can be read and written to the registers by writing to the *Value* or bit field of the GUI.

Copyright © 2018, Texas Instruments Incorporated

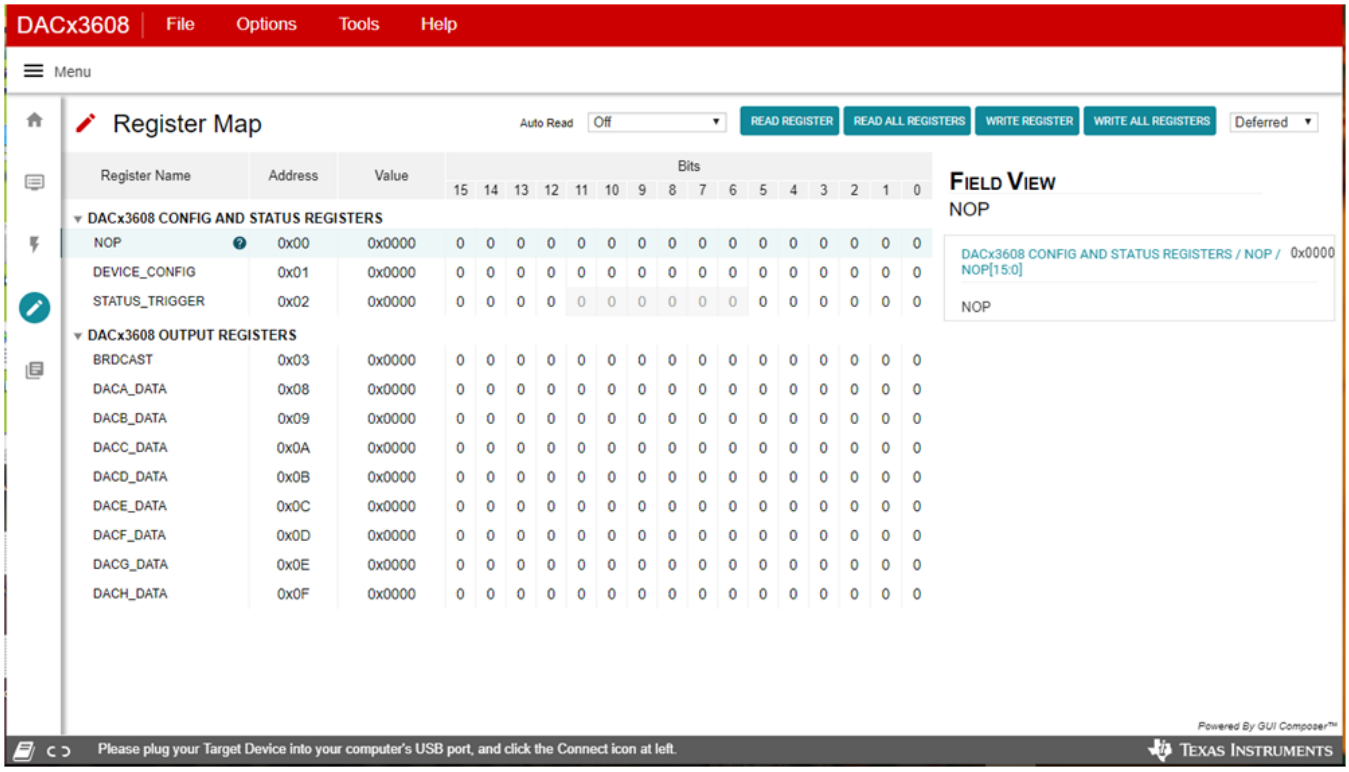

Figure 14. Register Map Page

There are some configuration lists and action buttons provided on the *Register Map* page. The values of the register map can be stored locally by pressing the *Save Registers* button under the *File* menu option. Additionally, the stored configuration files can be recalled and loaded through the *Load Registers* button. Other options selectable by the user are the *Auto Read Interval*,*Read Register*, *Read All Registers*, *Write Register*, *Write All Registers*, and *Update Mode* buttons. All buttons are displayed in Figure 15. Note that the *Write Register* and *Write All Registers* buttons are enabled only with **Deferred** update mode. The *Deferred* mode initiates a write operation only when the *Write Register* or the *Write All Registers* button is pressed. The *Immediate* update mode that is supposed to update immediately after a change is not implemented for the *Register Map* page write operations in this version of the software.

Figure 15. Register Page Options

3.2.2.5 Collateral Page

This page shown inFigure 16 provides links for all the collateral on the DAC53608 device.

Copyright © 2018, Texas Instruments Incorporated

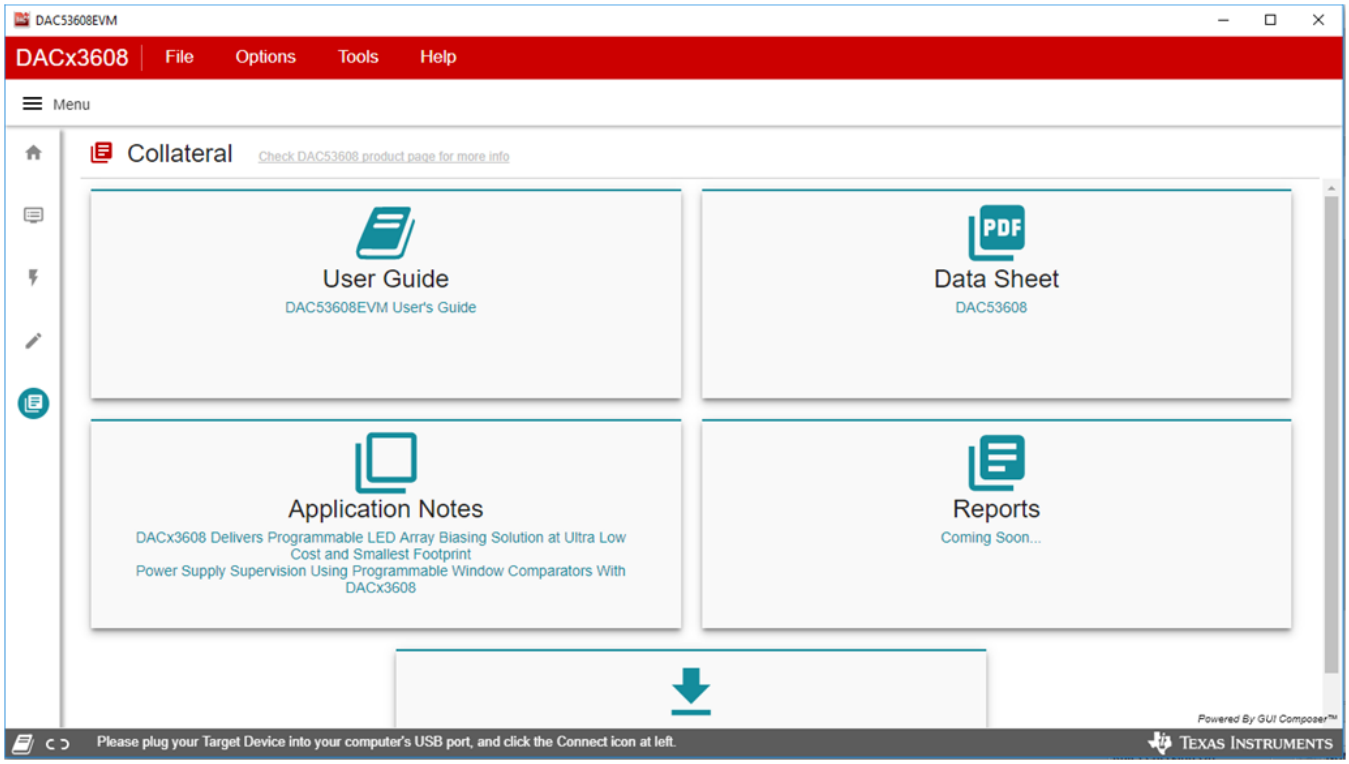

Figure 16. Collateral Page

Copyright © 2018, Texas Instruments Incorporated

4 Schematic, PCB Layout, and Bill of Materials

This section contains the complete bill of materials and schematic diagram for the BOOSTXL-DAC-PORT and DAC53608EVM.

Copyright © 2018, Texas Instruments Incorporated

4.1 BOOSTXL-DAC-PORT Schematic

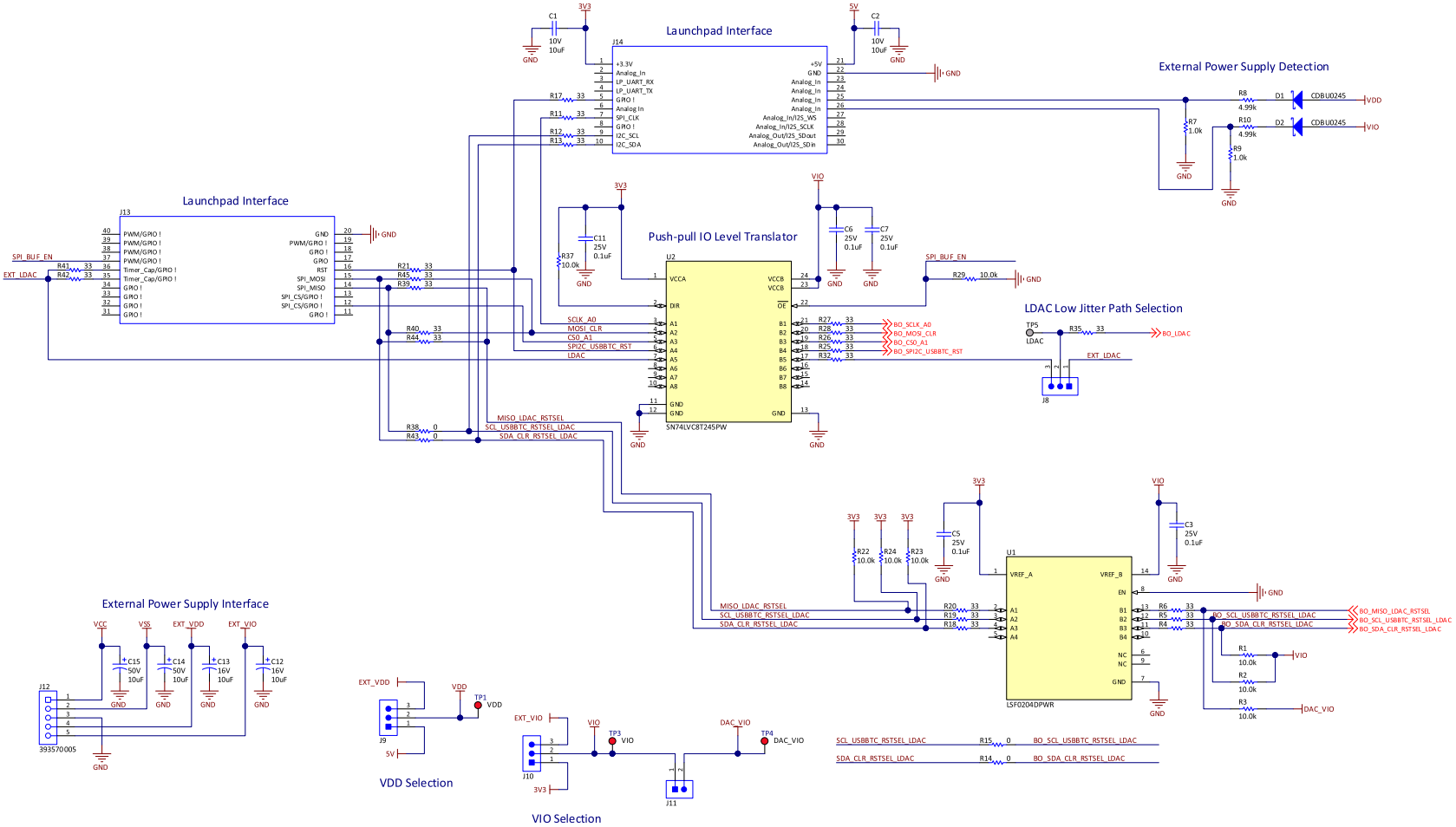

Figure 17. BOOSTXL-DAC-PORT Schematic Page 1

Copyright © 2018, Texas Instruments Incorporated

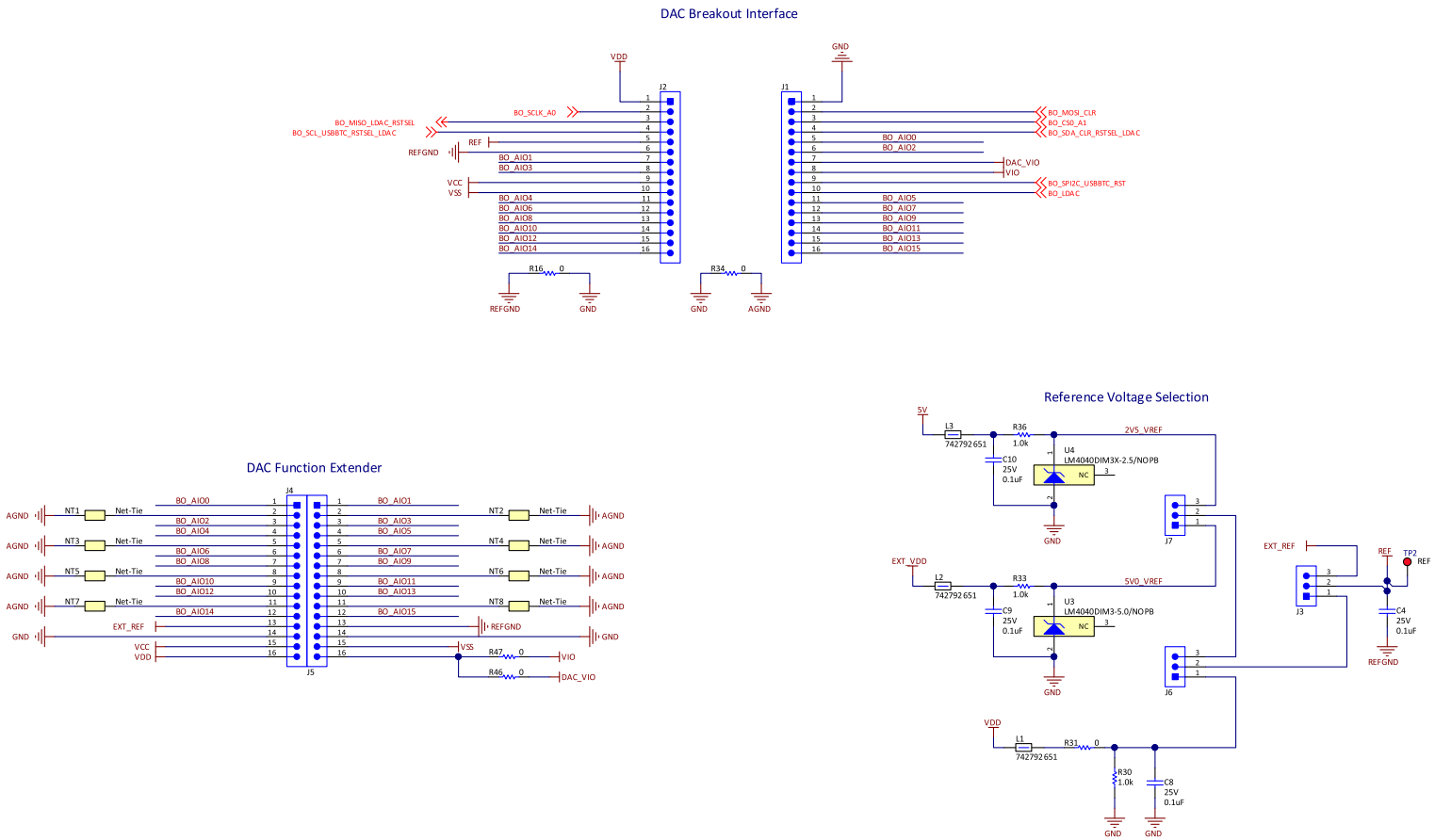

Copyright © 2018, Texas Instruments Incorporated

Figure 18. BOOSTXL-DAC-PORT Schematic Page 2

Copyright © 2018, Texas Instruments Incorporated

4.2 DAC53608EVM Schematic

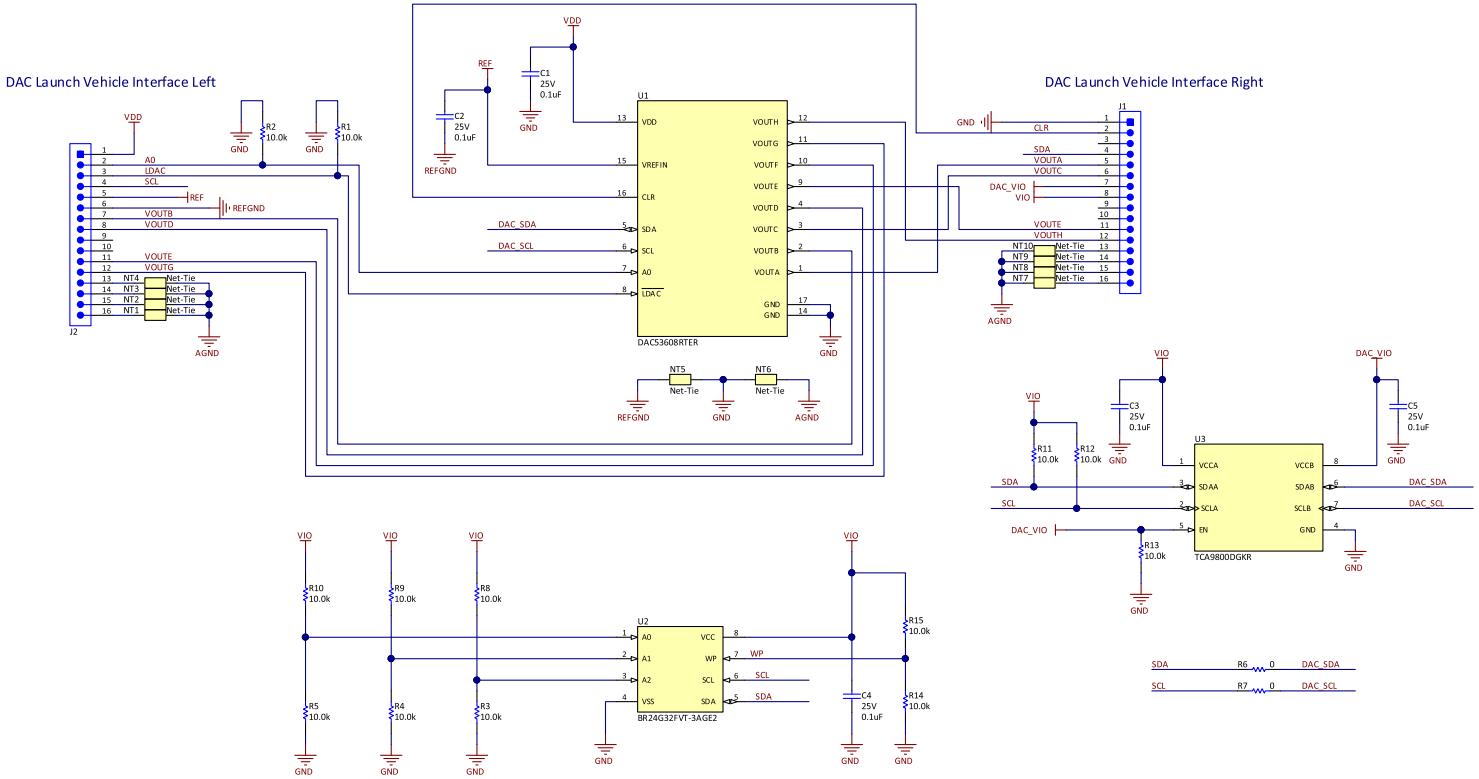

Copyright © 2018, Texas Instruments Incorporated

Figure 19. DAC53608EVM Schematic

Copyright © 2018, Texas Instruments Incorporated

4.3 PCB Components Layout

Copyright © 2018, Texas Instruments Incorporated

Figure 20 through Figure 24 show the layout of the components for the DAC53608EVM board.

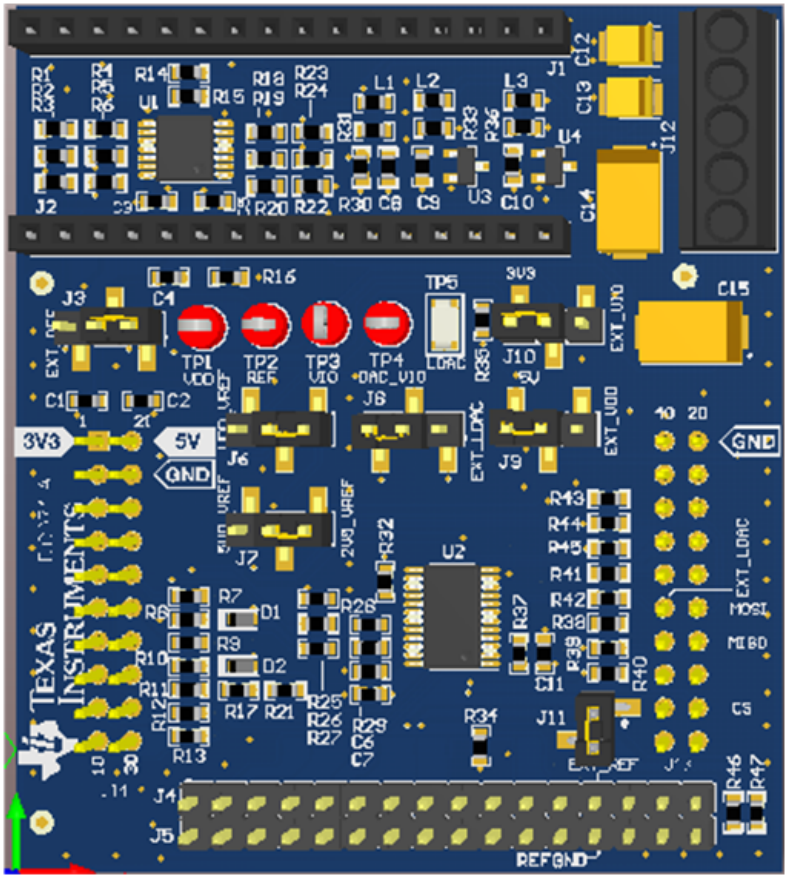

Figure 20. BOOSTXL-DAC-PORT PCB Components Layout

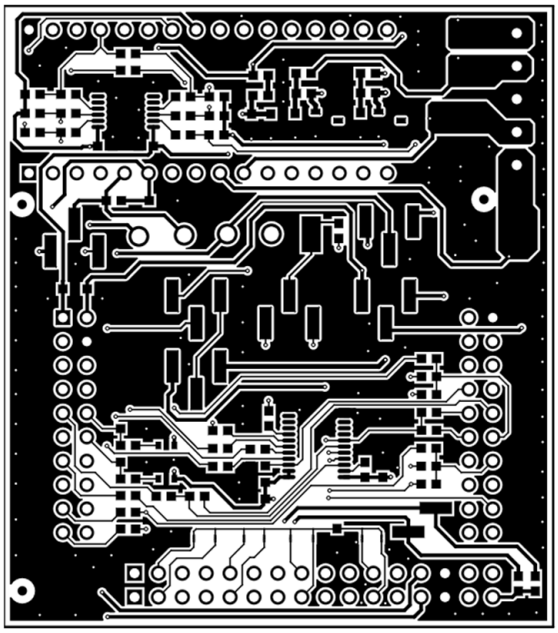

Figure 21. BOOSTXL-DAC-PORT Top Layer

Copyright © 2018, Texas Instruments Incorporated

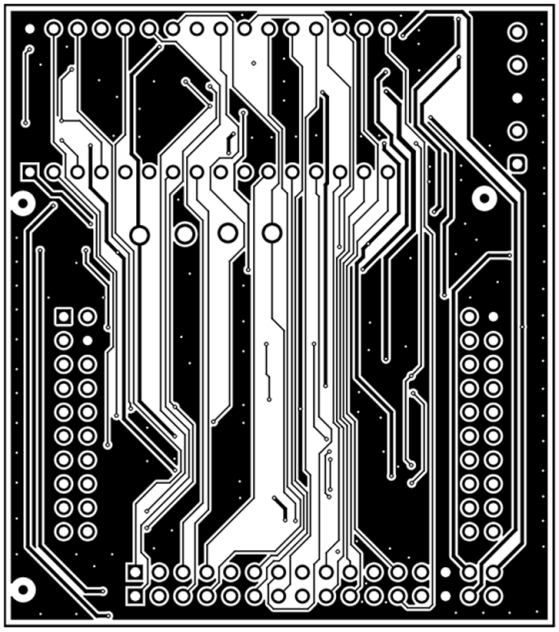

Figure 22. BOOSTXL-DAC-PORT Bottom Layer

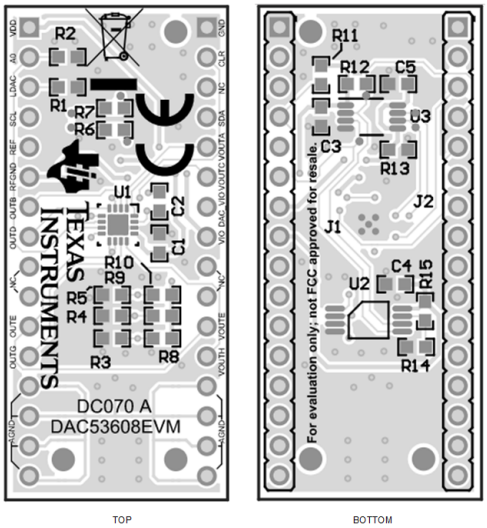

Figure 23. DAC53608EVM PCB Components Layout

Copyright © 2018, Texas Instruments Incorporated

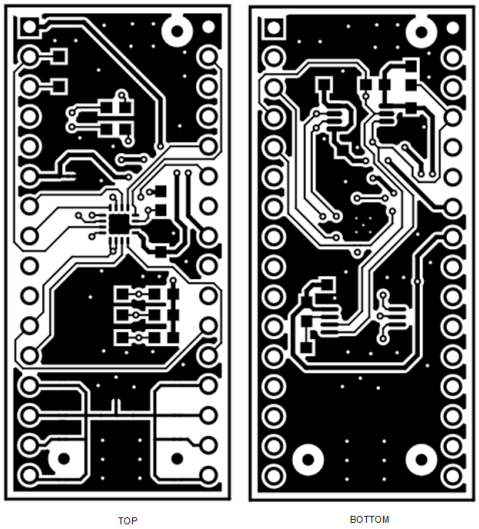

Figure 24. DAC53608EVM Layers

Copyright © 2018, Texas Instruments Incorporated

4.4 BOOSTXL-DAC-PORT Bill of Materials

Table 13. BOOSTXL-DAC-PORT Bill of Materials

Designator	Quantity	Value	Description	Package Reference	Part Number	Manufacturer
!PCB1	1		Printed Circuit Board		DC071	Any
C1, C2	2	10uF	CAP, CERM, 10 uF, 10 V, +/- 20%, X7R, 0603	0603	GRM188Z71A106MA73D	MuRata
C3, C4, C5, C6, C7, C8, C9, C10, C11	9	0.1uF	CAP, CERM, 0.1 uF, 25 V, +/- 10%, X7R, 0603	0603	C1608X7R1E104K080AA	TDK
C12, C13	2	10uF	CAP, TA, 10 uF, 16 V, +/- 10%, 2 ohm, SMD	3528-21	293D106X9016B2TE3	Vishay-Sprague
C14, C15	2	10uF	CAP, TA, 10 uF, 50 V, +/- 10%, 0.5 ohm, SMD	7343-43	TPSE106K050R0500	AVX
D1, D2	2	50V	Diode, Schottky, 50 V, 0.2 A, SOD-523F	SOD-523F	CDBU0245	Comchip Technology
J1, J2	2		Receptacle, 2.54mm, 16x1, Tin, TH	Receptacle, 2.54mm, 16x1, TH	PPTC161LFBN-RC	Sullins Connector Solutions
J3, J6, J7, J8, J9, J10	6		Header, 2.54mm, 3x1, Gold, SMT	Header, 2.54mm, 3x1, SMT	TSM-103-01-L-SV-P-TR	Samtec
J4, J5	2		Header, 2.54mm, 16x1, TH	Header, 2.54mm, 16x1, TH	22284160	Molex
J11	1		Header, 100mil, 2x1, Gold with Tin Tail, SMT	2x1 Header	TSM-102-01-L-SV	Samtec
J12	1		Terminal Block, 3.5mm, 5x1, Tin, TH	Terminal Block, 3.5mm, 5x1, TH	393570005	Molex
J13, J14	2		Receptacle, 2.54mm, 10x2, Tin, TH	10x2 Receptacle	SSQ-110-03-T-D	Samtec
L1, L2, L3	3	600 ohm	Ferrite Bead, 600 ohm @ 100 MHz, 1 A, 0603	0603	742792651	Wurth Elektronik
LBL1	1		Thermal Transfer Printable Labels, 0.650" W x 0.200" H - 10,000 per roll	PCB Label 0.650 x 0.200 inch	THT-14-423-10	Brady
R1, R2, R3, R22, R23, R24, R29, R37	8	10.0k	RES, 10.0 k, 1%, 0.1 W, 0603	0603	RC0603FR-0710KL	Yageo America
R4, R5, R6, R11, R12, R13, R17, R18, R19, R20, R21, R25, R26, R27, R28, R32, R35, R39, R41, R42, R45	21	33	RES, 33, 5%, 0.1 W, AEC-Q200 Grade 0, 0603	0603	CRCW060333R0JNEA	Vishay-Dale
R7, R9, R30, R33, R36	5	1.0k	RES, 1.0 k, 5%, 0.1 W, AEC-Q200 Grade 0, 0603	0603	CRCW06031K00JNEA	Vishay-Dale

Copyright © 2018, Texas Instruments Incorporated

Table 13. BOOSTXL-DAC-PORT Bill of Materials (continued)

Designator	Quantity	Value	Description	Package Reference	Part Number	Manufacturer
R8, R10	2	4.99k	RES, 4.99 k, 1%, 0.1 W, 0603	0603	CR0603-FX-4991ELF	Bourns
R14, R31, R34, R47	4	0	RES, 0, 5%, 0.1 W, 0603	0603	RC0603JR-070RL	Yageo America
SH-J1, SH-J2, SH-J3, SH-J4, SH-J5, SH-J6, SH-J7	7	1x2	Shunt, 100mil, Gold plated, Black	Shunt	SNT-100-BK-G	Samtec
TP1, TP2, TP3, TP4	4		Test Point, Compact, Red, TH	Red Compact Testpoint	5005	Keystone
TP5	1		Test Point, Miniature, SMT	Test Point, Miniature, SMT	5019	Keystone
U1	1		4-Bit Bidirectional Multi-Voltage Level Translator for Open-Drain & Push-Pull, PW0014A (TSSOP-14)	PW0014A	LSF0204DPWR	Texas Instruments
U2	1		8-Bit Dual-Supply Bus Transceiver with Configurable Voltage-Level Shifting and Three-State Outputs, PW0024A (TSSOP-24)	PW0024A	SN74LVC8T245PW	Texas Instruments
U3	1		Precision Micropower Shunt Voltage Reference, DBZ0003A (SOT-23-3)	DBZ0003A	LM4040DIM3-5.0/NOPB	Texas Instruments
U4	1		Precision Micropower Shunt Voltage Reference, DBZ0003A (SOT-23-3)	DBZ0003A	LM4040DIM3X-2.5/NOPB	Texas Instruments
R15, R16, R38, R43, R46	0	0	RES, 0, 5%, 0.1 W, 0603	0603	RC0603JR-070RL	Yageo America
R40, R44	0	33	RES, 33, 5%, 0.1 W, AEC-Q200 Grade 0, 0603	0603	CRCW060333R0JNEA	Vishay-Dale

Copyright © 2018, Texas Instruments Incorporated

4.5 DAC53608EVM Bill of Materials

Table 14. DAC53608EVM Bill of Materials

Designator	Quantity	Value	Description	Package Reference	Part Number	Manufacturer
!PCB	1		Printed Circuit Board		DC070	Any
C1, C2, C3, C4, C5	5	0.1uF	CAP, CERM, 0.1 uF, 25 V, +/- 10%, X7R, 0603	0603	C1608X7R1E104K080AA	TDK
J1, J2	2		Header, 2.54mm, 16x1, TH	Header, 2.54mm, 16x1, TH	22284160	Molex
R2, R3, R4, R5, R11, R12, R13, R14, R15	9	10.0k	RES, 10.0 k, 1%, 0.1 W, 0603	0603	RC0603FR-0710KL	Yageo America
U1	1		Octal, 10-Bit, I2C Interface, Buffered Voltage Output DAC, RTE0016C (WQFN-16)	RTE0016C	DAC53608RTER	Texas Instruments
U2	1		I2C BUS EEPROM (2-Wire), TSSOP-B8	TSSOP-8	BR24G32FVT-3AGE2	Rohm
U3	1		I2C Level-Translation I2C Bus Repeater, DGK0008A (VSSOP-8)	DGK0008A	TCA9800DGKR	Texas Instruments
R6, R7	0	0	RES, 0, 5%, 0.1 W, 0603	0603	RC0603JR-070RL	Yageo America
R8, R9, R10	0	10.0k	RES, 10.0 k, 1%, 0.1 W, 0603	0603	RC0603FR-0710KL	Yageo America
R1	1	1.0k	RES, 1.0 k, 5%, 0.1 W, AEC-Q200 Grade 0, 0603	0603	CRCW06031K00JNEA	Vishay-Dale

Copyright © 2018, Texas Instruments Incorporated

IMPORTANT NOTICE AND DISCLAIMER

TI PROVIDES TECHNICAL AND RELIABILITY DATA (INCLUDING DATASHEETS), DESIGN RESOURCES (INCLUDING REFERENCE DESIGNS), APPLICATION OR OTHER DESIGN ADVICE, WEB TOOLS, SAFETY INFORMATION, AND OTHER RESOURCES “AS IS” AND WITH ALL FAULTS, AND DISCLAIMS ALL WARRANTIES, EXPRESS AND IMPLIED, INCLUDING WITHOUT LIMITATION ANY IMPLIED WARRANTIES OF MERCHANTABILITY, FITNESS FOR A PARTICULAR PURPOSE OR NON-INFRINGEMENT OF THIRD PARTY INTELLECTUAL PROPERTY RIGHTS.

These resources are intended for skilled developers designing with TI products. You are solely responsible for (1) selecting the appropriate TI products for your application, (2) designing, validating and testing your application, and (3) ensuring your application meets applicable standards, and any other safety, security, or other requirements. These resources are subject to change without notice. TI grants you permission to use these resources only for development of an application that uses the TI products described in the resource. Other reproduction and display of these resources is prohibited. No license is granted to any other TI intellectual property right or to any third party intellectual property right. TI disclaims responsibility for, and you will fully indemnify TI and its representatives against, any claims, damages, costs, losses, and liabilities arising out of your use of these resources.

TI’s products are provided subject to TI’s Terms of Sale (www.ti.com/legal/termsofsale.html) or other applicable terms available either on ti.com or provided in conjunction with such TI products. TI’s provision of these resources does not expand or otherwise alter TI’s applicable warranties or warranty disclaimers for TI products.

Mailing Address: Texas Instruments, Post Office Box 655303, Dallas, Texas 75265
Copyright © 2018, Texas Instruments Incorporated