DAC34H84 Quad-Channel, 16-Bit, 1.25 GSPS Digital-to-Analog Converter (DAC)

1 Features

- Very Low Power: 1.4 W at 1.25 GSPS
- Multi-DAC Synchronization
- Selectable 2x, 4x, 8x, 16x Interpolation Filter
  - Stop-Band Attenuation > 90 dBc
- Flexible On-chip Complex Mixing
  - Two Independent Fine Mixers with 32-bit NCOs
  - Power Saving Coarse Mixers: ± n×Fs/8
- High Performance, Low Jitter Clock Multiplying PLL
- Digital I and Q Correction
  - Gain, Phase, Offset, and Group Delay Correction
- Digital Inverse Sinc Filters
- 32-Bit DDR Flexible LVDS Input Data Bus
  - 8 Sample Input FIFO
  - Supports Data Rates up to 625 MSPS
  - Data Pattern Checker
  - Parity Check
- Temperature Sensor
- Differential Scalable Output: 10mA to 30mA
- 196-Ball, 12x12mm NFBGA (GREEN / Pb-Free)

2 Applications

- Cellular Base Stations
- Diversity Transmit
- Wideband Communications

3 Description

The DAC34H84 is a very low power, high dynamic range, quad-channel, 16-bit digital-to-analog converter (DAC) with a sample rate as high as 1.25 GSPS.

The device includes features that simplify the design of complex transmit architectures: 2x to 16x digital interpolation filters with over 90 dB of stop-band attenuation simplify the data interface and reconstruction filters. Independent complex mixers allow flexible carrier placement.

A high-performance low jitter clock multiplier simplifies clocking of the device without significant impact on the dynamic range. The digital Quadrature Modulator Correction (QMC) enables complete IQ compensation for gain, offset, phase and group delay between channels in direct up-conversion applications.

Digital data is input to the device through a 32-bit wide LVDS data bus with on-chip termination. The wide bus allows the processing of very high bandwidth signals. The device includes a FIFO, data pattern checker and parity test to ease the input interface. The interface also allows full synchronization of multiple devices.

The device is characterized for operation over the entire industrial temperature range of –40°C to 85°C and is available in a 196-ball, 12x12mm, 0.8mm pitch BGA package.

The DAC34H84 very low power, high bandwidth support, superior crosstalk, high dynamic range and features are an ideal fit for next generation communication systems.

Device Information(1)

PART NUMBER	PACKAGE	BODY SIZE (NOM)
DAC34H84	NFBGA (196)	12.00 mm x 12.00 mm

(1) For all available packages, see the orderable addendum at the end of the data sheet.

Simplified Schematic

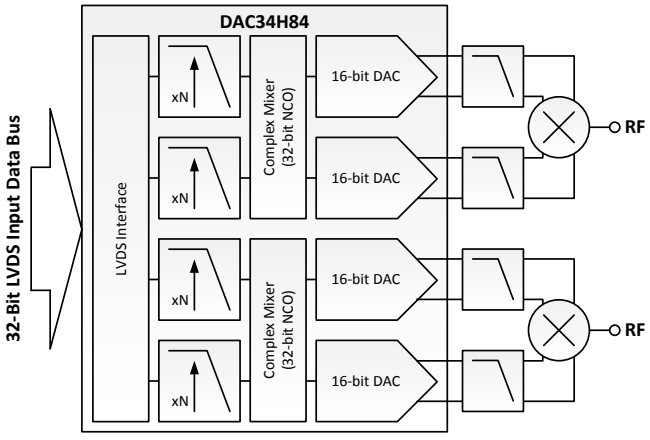

An IMPORTANT NOTICE at the end of this data sheet addresses availability, warranty, changes, use in safety-critical applications, intellectual property matters and other important disclaimers. PRODUCTION DATA.

Table of Contents

1 Features ... 1
2 Applications ... 1
3 Description ... 1
4 Revision History ... 2
5 Pin Configuration and Functions ... 4
6 Specifications ... 7
6.1 Absolute Maximum Ratings ... 7
6.2 ESD Ratings ... 7
6.3 Recommended Operating Conditions ... 8
6.4 Thermal Information ... 8
6.5 Electrical Characteristics – DC Specifications ... 8
6.6 Electrical Characteristics – Digital Specifications ... 10
6.7 Electrical Characteristics – AC Specifications ... 11
6.8 Timing Requirements – Digital Specifications ... 11
6.9 Switching Characteristics – AC Specifications ... 13
6.10 Typical Characteristics ... 14
7 Detailed Description ... 22
7.1 Overview ... 22
7.2 Functional Block Diagram ... 23
7.3 Feature Description ... 24
7.4 Device Functional Modes ... 52
7.5 Programming ... 56
7.6 Register Map ... 60
8 Application and Implementation ... 77
8.1 Application Information ... 77
8.2 Typical Applications ... 78
9 Power Supply Recommendations ... 84
10 Layout ... 85
10.1 Layout Guidelines ... 85
10.2 Layout Examples ... 86
11 Device and Documentation Support ... 89
11.1 Device Support ... 89
11.2 Documentation Support ... 89
11.3 Community Resources ... 90
11.4 Trademarks ... 90
11.5 Electrostatic Discharge Caution ... 90
11.6 Glossary ... 90
12 Mechanical, Packaging, and Orderable Information ... 90

4 Revision History

NOTE: Page numbers for previous revisions may differ from page numbers in the current version.

Changes from Revision C (August 2012) to Revision D — **Page**

- Added *ESD Ratings* table, *Feature Description* section, *Device Functional Modes, Application and Implementation* section, *Power Supply Recommendations* section, *Layout* section, *Device and Documentation Support* section, and *Mechanical, Packaging, and Orderable Information* section. ... 1

Changes from Revision B (August 2011) to Revision C — **Page**

- Added thermal information to the Absolute Maximum Ratings table ... 7
- Added Recommended Operating Conditions table ... 8
- Deleted T_J row from top of thermal table ... 8
- Deleted OPERATING RANGE section from bottom of Electrical Characteristics – DC Specifications ... 10

Changes from Revision A (June 2011) to Revision B — **Page**

- Changed ALARM description ... 5
- Added notes to Electrical Characteristics – DC Specifications ... 9
- Deleted $t_{(align)}$ from Electrical Characteristics – Digital Specifications ... 10
- Added f_{DAC} PLL ON MIN of 1000 MSPS in Electrical Characteristics – AC Specifications ... 11
- Changed DIGITAL INPUT TIMING SPECIFICATIONS in Timing Requirements - Digital Specifications ... 11
- Changed DAC Wake-up Time in Switching Characteristics – AC Specifications ... 13
- Added information to SINGLE SYNC SOURCE MODE section ... 29
- Deleted $t_{(align)}$ from BYPASS MODE section ... 29
- Changed 1.2288GHz to 983.04MHz in PLL MODE description ... 31
- Changed data in Table 4 ... 31
- Deleted 2x in Table 6 ... 35

Copyright © 2011–2015, Texas Instruments Incorporated

- Changed EXAMPLE START-UP ROUTINE information 57
- Changed Table 10 58
- Changed register version default value from 0x5408 to 0x5409 in Register Map 61
- Deleted $t_{(align)}$ from register config0 description 62
- Added SIF SYNC to register config32 description 73
- Changed B40 to N11 in register config35 description 74
- Changed register config 45 default value 75
- Changed register version default value from 0x5408 to 0x5409 76

Changes from Original (March 2011) to Revision A **Page**

- Changed from PRODUCT PREVIEW to PRODUCTION DATA 1

Copyright © 2011–2015, Texas Instruments Incorporated

5 Pin Configuration and Functions

ZAY Package
196-Pin NFBGA
Top View

	A	B	C	D	E	F	G	H	J	K	L	M	N	P
14	GND	IOUT AP	IOUT AN	GND	IOUT BN	IOUT BP	GND	GND	IOUT CP	IOUT CN	GND	IOUT DN	IOUT DP	GND
13	GND	GND	GND	GND	GND	GND	GND	GND	GND	GND	GND	GND	GND	GND
12	DAC CLKP	GND	CLK VDD	LPF	GND	GND	EXTIO	BIASJ	GND	CLK VDD	IO VDD2	GND	ALARM	SDO
11	DAC CLKN	GND	PLL AVDD	PLL AVDD	AVDD	AVDD	AVDD	AVDD	AVDD	AVDD	TEST MODE	GND	SLEEP	SDIO
10	GND	GND	GND	AVDD	DAC VDD	DAC VDD	DAC VDD	DAC VDD	DAC VDD	DAC VDD	AVDD	GND	RESET B	SDENB
9	OSTR P	OSTR N	GND	DAC VDD	DAC VDD	GND	GND	GND	GND	DAC VDD	DAC VDD	GND	TXENA	SCLK
8	SYNC P	SYNC N	GND	GND	GND	GND	GND	GND	GND	GND	GND	GND	PARITY CDP	PARITY CDN
7	DAB 15P	DAB 15N	GND	VFUSE	DIG VDD	GND	GND	GND	GND	DIG VDD	VFUSE	GND	DCD 0P	DCD 0N
6	DAB 14P	DAB 14N	GND	IO VDD	DIG VDD	GND	GND	GND	GND	DIG VDD	IO VDD	GND	DCD 1P	DCD 1N
5	DAB 13P	DAB 13N	GND	IO VDD	DIG VDD	DIG VDD	IO VDD	IO VDD	DIG VDD	DIG VDD	IO VDD	GND	DCD 2P	DCD 2N
4	DAB 12P	DAB 12N	DAB 8P	DAB 6P	DAB 4P	DAB 2P	DAB 0P	DCD 15P	DCD 14P	DCD 12P	DCD 10P	DCD 8P	DCD 3P	DCD 3N
3	DAB 11P	DAB 11N	DAB 8N	DAB 6N	DAB 4N	DAB 2N	DAB 0N	DCD 15N	DCD 14N	DCD 12N	DCD 10N	DCD 8N	DCD 4P	DCD 4N
2	DAB 10P	DAB 10N	DAB 7P	DAB 5P	DAB 3P	DAB 1P	DATA CLKP	ISTR/ PARITY ABP	DCD 13P	DCD 11P	DCD 9P	DCD 7P	DCD 5P	DCD 5N
1	DAB 9P	DAB 9N	DAB 7N	DAB 5N	DAB 3N	DAB 1N	DATA CLKN	ISTR/ PARITY ABN	DCD 13N	DCD 11N	DCD 9N	DCD 7N	DCD 6P	DCD 6N

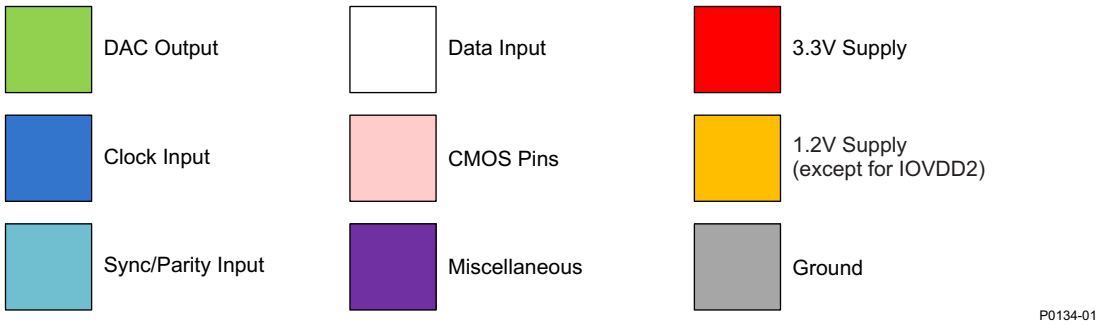

Copyright © 2011–2015, Texas Instruments Incorporated

Pin Functions

PIN		I/O	DESCRIPTION
NAME	NO.		
AVDD	D10, E11, F11, G11, H11, J11, K11, L10	I	Analog supply voltage. (3.3 V)
ALARM	N12	O	CMOS output for ALARM condition. The ALARM output functionality is defined through the *config7* register. Default polarity is active high, but can be changed to active low via *config0 alarm_out_pol* control bit.
BIASJ	H12	O	Full-scale output current bias. For 30-mA full-scale output current, connect 1.28 kΩ to ground. Change the full-scale output current through *coarse_dac(3:0)* in *config3, bit<15:12>*
CLKVDD	C12, K12	I	Internal clock buffer supply voltage. (1.2 V). It is recommended to isolate this supply from DIGVDD and DACVDD.
DAB[15..0]P	A7, A6, A5, A4, A3, A2, A1, C4, C2, D4, D2, E4, E2, F4, F2, G4	I	LVDS positive input data bits 0 through 15 for the AB-channel path. Internal 100-Ω termination resistor. Data format relative to DATACLKP/N clock is Double Data Rate (DDR). DAB15P is most significant data bit (MSB) DAB0P is least significant data bit (LSB) The order of the bus can be reversed via *config2 revbus* bit.
DAB[15..0]N	B7, B6, B5, B4, B3, B2, B1, C3, C1, D3, D1, E3, E1, F3, F1, G3	I	LVDS negative input data bits 0 through 15 for the AB-channel path. (See DAB[15:0]P description above)
DCD[15..0]P	H4, J4, J2, K4, K2, L4, L2, M4, M2, N1, N2, N3, N4, N5, N6, N7	I	LVDS positive input data bits 0 through 15 for the CD-channel path. Internal 100-Ω termination resistor. Data format relative to DATACLKP/N clock is Double Data Rate (DDR). DCD15P is most significant data bit (MSB) DCD0P is least significant data bit (LSB) The order of the bus can be reversed via config2 revbus bit.
DCD[15..0]N	H3, J3, J1, K3, K1, L3, L1, M3, M1, P1, P2, P3, P4, P5, P6, P7	I	LVDS negative input data bits 0 through 15 for the CD-channel path. (See DCD[15:0]P description above)
DACCLKP	A12	I	Positive external LVPECL clock input for DAC core with a self-bias.
DACCLKN	A11	I	Complementary external LVPECL clock input for DAC core. (see the DACCLKP description)
DACVDD	D9, E9, E10, F10, G10, H10, J10, K10, K9, L9	I	DAC core supply voltage. (1.2 V). It is recommended to isolate this supply from CLKVDD and DIGVDD.
DATACLKP	G2	I	LVDS positive input data clock. Internal 100-Ω termination resistor. Input data DAB[15:0]P/N and DCD[15:0]P/N are latched on both edges of DATACLKP/N (Double Data Rate).
DATACLKN	G1	I	LVDS negative input data clock. (See DATACLKP description)
DIGVDD	E5, E6, E7, F5, J5, K5, K6, K7	I	Digital supply voltage. (1.2 V). It is recommended to isolate this supply from CLKVDD and DACVDD.
EXTIO	G12	I/O	Used as external reference input when internal reference is disabled through *config27 extref_ena* = 1b. Used as internal reference output when *config27 extref_ena* = 0b (default). Requires a 0.1-µF decoupling capacitor to AGND when used as reference output.
ISTRP/ PARITYABP	H2	I	LVDS input strobe positive input. Internal 100-Ω termination resistor. The main functions of this input are to sync the FIFO pointer, to provide a sync source to the digital blocks, and/or to act as a parity input for the AB-data bus. These functions are captured with the rising edge of DATACLKP/N. This signal should be edge-aligned with DAB[15:0]P/N and DCD[15:0]P/N. The PARITY, SYNC, and ISTR inputs are rotated to allow complete reversal of the data interface when setting the *rev_interface* bit in register *config1*.
ISTRN/ PARITYABN	H1	I	LVDS input strope negative input. (See the ISTRP/PARITYABP description)

Copyright © 2011–2015, Texas Instruments Incorporated

Pin Functions (continued)

PIN		I/O	DESCRIPTION
NAME	NO.		
GND	A10, A13, A14, B10, B11, B12, B13, C5, C6, C7, C8, C9, C10, C13, D8, D13, D14, E8, E12, E13, F6, F7, F8, F9, F12, F13, G6, G7, G8, G9, G13, G14, H6, H7, H8, H9, H13, H14, J6, J7, J8, J9, J12, J13, K8, K13, L8, L13, L14, M5, M6, M7, M8, M9, M10, M11, M12, M13, N13, P13, P14	I	These pins are ground for all supplies.
IOUTAP	B14	O	A-Channel DAC current output. Connect directly to ground if unused.
IOUTAN	C14	O	A-Channel DAC complementary current output. Connect directly to ground if unused.
IOUTBP	F14	O	B-Channel DAC current output. Connect directly to ground if unused.
IOUTBN	E14	O	B-Channel DAC complementary current output. Connect directly to ground if unused.
IOUTCP	J14	O	C-Channel DAC current output. Connect directly to ground if unused.
IOUTCN	K14	O	C-Channel DAC complementary current output. Connect directly to ground if unused.
IOUTDP	N14	O	D-Channel DAC current output. Connect directly to ground if unused.
IOUTDN	M14	O	D-Channel DAC complementary current output. Connect directly to ground if unused.
IOVDD	D5, D6, G5, H5, L5. L6	I	Supply voltage for all LVDS I/O. (3.3 V)
IOVDD2	L12	I	Supply voltage for all CMOS I/O. (1.8 to 3.3 V) This supply can range from 1.8 V to 3.3 V to change the input and output level of the CMOS I/O.
LPF	D12	I/O	PLL loop filter connection. If not using the clock multiplying PLL, the LPF pin can be left unconnected.
OSTRP	A9	I	Optional LVPECL output strobe positive input. This positive/negative pair is captured with the rising edge of DACCLKP/N. It is used to sync the divided-down clocks and FIFO output pointer in Dual Sync Sources Mode. If unused it can be left unconnected.
OSTRN	B9	I	Optional LVPECL output strobe negative input. (See the OSTRP description)
PARITYCDP	N8	I	Optional LVDS positive input parity bit for the CD-data bus. The PARITYCDP/N LVDS pair has an internal 100-Ω termination resistor. If unused it can be left unconnected. The PARITY, SYNC, and ISTR inputs are rotated to allow complete reversal of the data interface when setting the rev_interface bit in register *config1*.
PARITYCDN	P8	I	Optional LVDS negative input parity bit for the CD-data bus.
PLLAVDD	C11, D11	I	PLL analog supply voltage. (3.3 V)
SCLK	P9	I	Serial interface clock. Internal pull-down.
SDENB	P10	I	Active low serial data enable, always an input to the DAC34H84. Internal pull-up.
SDIO	P11	1/O	Serial interface data. Bi-directional in 3-pin mode (default) and uni-directional 4-pin mode. Internal pull-down.
SDO	P12	O	Uni-directional serial interface data in 4-pin mode. The SDO pin is tri-stated in 3-pin interface mode (default).
SLEEP	N11	I	Active high asynchronous hardware power-down input. Internal pull-down.

Copyright © 2011–2015, Texas Instruments Incorporated

Pin Functions (continued)

PIN		I/O	DESCRIPTION
NAME	NO.		
SYNCP	A8	I	LVDS SYNC positive input. Internal 100-Ω termination resistor. If unused it can be left unconnected. The PARITY, SYNC, and ISTR inputs are rotated to allow complete reversal of the data interface when setting the *rev_interface* bit in register *config1*.
SYNCN	B8	I	LVDS SYNC negative input.
RESETB	N10	I	Active low input for chip RESET. Internal pull-up.
TXENA	N9	I	Transmit enable active high input. Internal pull-down. To enable analog output data transmission, set *sif_txenable* in register *config3* to 1b **or** pull CMOS TXENA pin to high. To disable analog output, set *sif_txenable* to 0b **and** pull CMOS TXENA pin to low. The DAC output is forced to midscale.
TESTMODE	L11	I	This pin is used for factory testing. Internal pull-down. **Leave unconnected for normal operation.**
VFUSE	D7, L7	I	Digital supply voltage. This supply pin is also used for factory fuse programming. **Connect to DACVDD or DIGVDD for normal operation.**

6 Specifications

6.1 Absolute Maximum Ratings

over operating free-air temperature range (unless otherwise noted)(1)

		MIN	MAX	UNIT
Supply voltage range(2)	DACVDD, DIGVDD, CLKVDD	–0.5	1.5	V
	VFUSE	–0.5	1.5	V
	IOVDD, IOVDD2	–0.5	4	V
	AVDD, PLLAVDD	–0.5	4	V
Pin voltage range(2)	DAB[15..0]P/N, DCD[15..0]P/N, DATACLKP/N, ISTRP/N, PARITYCDP/N, SYNCP/N	–0.5	IOVDD + 0.5	V
	DACCLKP/N, OSTRP/N	–0.5	CLKVDD + 0.5	V
	ALARM, SDO, SDIO, SCLK, SDENB, SLEEP, RESETB, TESTMODE, TXENA	–0.5	IOVDD2 + 0.5	V
	IOUTAP/N, IOUTBP/N, IOUTCP/N, IOUTDP/N	–1.0	AVDD + 0.5	V
	EXTIO, BIASJ	–0.5	AVDD + 0.5	V
	LPF	–0.5	PLLAVDD + 0.5	V
Peak input current (any input)			20	mA
Peak total input current (all inputs)			–30	mA
Operating free-air temperature range, T_A: DAC34H84		–40	85	°C
Absolute maximum junction temperature, T_J			150	°C
Storage temperature range, T_{stg}		–65	150	°C

(1) Stresses beyond those listed under absolute maximum ratings may cause permanent damage to the device. These are stress ratings only and functional operation of these or any other conditions beyond those indicated under “recommended operating conditions” is not implied. Exposure to absolute-maximum-rated conditions for extended periods may affect device reliability.
(2) Measured with respect to GND.

6.2 ESD Ratings

			VALUE	UNIT
$V_{(ESD)}$	Electrostatic discharge	Human-body model (HBM), per ANSI/ESDA/JEDEC JS-001(1)	±2000	V
		Charged-device model (CDM), per JEDEC specification JESD22-C101(2)	±500	

(1) JEDEC document JEP155 states that 500-V HBM allows safe manufacturing with a standard ESD control process.
(2) JEDEC document JEP157 states that 250-V CDM allows safe manufacturing with a standard ESD control process.

Copyright © 2011–2015, Texas Instruments Incorporated

6.3 Recommended Operating Conditions

		MIN	NOM	MAX	UNIT
T_J	Recommended operating junction temperature			105	°C
	Maximum rated operating junction temperature (1)	125			
T_A	Recommended free-air temperature	–40	25	85	°C

(1) Prolonged use at this junction temperature may increase the device failure-in-time (FIT) rate.

6.4 Thermal Information

THERMAL METRIC (1)		DAC34H84 ZAY (NFBGA) 196 BALLS	UNIT
$R_{\theta JA}$	Junction-to-ambient thermal resistance	37.6	°C/W
$R_{\theta JC(top)}$	Junction-to-case (top) thermal resistance	6.8	°C/W
$R_{\theta JB}$	Junction-to-board thermal resistance	16.8	°C/W
ψ_{JT}	Junction-to-top characterization parameter	0.2	°C/W
ψ_{JB}	Junction-to-board characterization parameter	16.4	°C/W
$R_{\theta JC(bot)}$	Junction-to-case (bottom) thermal resistance	N/A	°C/W

(1) For more information about traditional and new thermal metrics, see the *Semiconductor and IC Package Thermal Metrics* application report, SPRA953.

6.5 Electrical Characteristics – DC Specifications

over recommended operating free-air temperature range, nominal supplies, $IOUT_{FS}$ = 20mA (unless otherwise noted) (1)

PARAMETER		TEST CONDITIONS	MIN	TYP	MAX	UNIT
Resolution			16			Bits
DC ACCURACY						
DNL	Differential nonlinearity	1 LSB = $IOUT_{FS}/2^{16}$		±2		LSB
INL	Integral nonlinearity			±4		LSB
ANALOG OUTPUT						
	Coarse gain linearity			±0.04		LSB
	Offset error	Mid code offset		±0.001		%FSR
	Gain error	With external reference		±2		%FSR
		With internal reference		±2		%FSR
	Gain mismatch	With internal reference		±2		%FSR
	Full scale output current		10	20	30	mA
	Output compliance range		–0.5		0.6	V
	Output resistance			300		kΩ
	Output capacitance			5		pF
REFERENCE OUTPUT						
V_{REF}	Reference output voltage			1.2		V
	Reference output current (2)			100		nA
REFERENCE INPUT						
V_{EXTIO}	Input voltage range	External Reference Mode	0.6	1.2	1.25	V
	Input resistance			1		MΩ
	Small signal bandwidth			472		kHz
	Input capacitance			100		pF

(1) Measured differentially across IOUTP/N with 25 Ω each to GND.
(2) Use an external buffer amplifier with high impedance input to drive any external load.

Copyright © 2011–2015, Texas Instruments Incorporated

Electrical Characteristics – DC Specifications (continued)

over recommended operating free-air temperature range, nominal supplies, $IOUT_{FS}$ = 20mA (unless otherwise noted)(1)

PARAMETER		TEST CONDITIONS	MIN	TYP	MAX	UNIT
TEMPERATURE COEFFICIENTS						
	Offset drift			±1		ppm/°C
	Gain drift	with external reference		±15		ppm/°C
		with internal reference		±30		ppm/°C
	Reference voltage drift			±8		ppm/°C
POWER SUPPLY(3)						
	AVDD, IOVDD, PLLAVDD		3.14	3.3	3.46	V
	CLKVDD, DACVDD, DIGVDD		1.14	1.2	1.26	V
	IOVDD2		1.71	3.3	3.45	V
PSRR	Power supply rejection ratio	DC tested		±0.25		%FSR/V
POWER CONSUMPTION						
$I_{(AVDD)}$	Analog supply current(4)	MODE 1(5) f_{DAC} = 1.25GSPS, 2x interpolation, Mixer on, QMC on, invsinc on, PLL enabled, 20mA FS output, IF = 200MHz		135	165	mA
$I_{(DIGVDD)}$	Digital supply current			740	820	mA
$I_{(DACVDD)}$	DAC supply current			40	60	mA
$I_{(CLKVDD)}$	Clock supply current			100	120	mA
P	Power dissipation			1500	1750	mW
$I_{(AVDD)}$	Analog supply current(4)	MODE 2 f_{DAC} = 1.25GSPS, 2x interpolation, Mixer on, QMC on, invsinc on, PLL disabled, 20mA FS output, IF = 200MHz		125		mA
$I_{(DIGVDD)}$	Digital supply current			740		mA
$I_{(DACVDD)}$	DAC supply current			45		mA
$I_{(CLKVDD)}$	Clock supply current			75		mA
P	Power dissipation			1440		mW
$I_{(AVDD)}$	Analog supply current(4)	MODE 3 f_{DAC} = 625MSPS, 2x interpolation, Mixer on, QMC on, invsinc off, PLL disabled, 20mA FS output, IF = 200MHz		120		mA
$I_{(DIGVDD)}$	Digital supply current			370		mA
$I_{(DACVDD)}$	DAC supply current			25		mA
$I_{(CLKVDD)}$	Clock supply current			45		mA
P	Power dissipation			925		mW
$I_{(AVDD)}$	Analog supply current(4)	MODE 4 f_{DAC} = 1.25GSPS, 2x interpolation, Mixer on, QMC on, invsinc on, PLL enabled, Channels A/B/C/D output sleep, IF = 200MHz,		50		mA
$I_{(DIGVDD)}$	Digital supply current			750		mA
$I_{(DACVDD)}$	DAC supply current			40		mA
$I_{(CLKVDD)}$	Clock supply current			100		mA
P	Power dissipation			1240		mW
$I_{(AVDD)}$	Analog supply current(4)	Mode 5 Power-Down mode: No clock, DAC on sleep mode (clock receiver sleep), Channels A/B/C/D output sleep, static data pattern		40		mA
$I_{(DIGVDD)}$	Digital supply current			10		mA
$I_{(DACVDD)}$	DAC supply current			5		mA
$I_{(CLKVDD)}$	Clock supply current			15		mA
P	Power dissipation			150		mW
$I_{(AVDD)}$	Analog supply current(4)	Mode 6 f_{DAC} = 1GSPS, 2x interpolation, Mixer off, QMC off, invsinc off, PLL enabled, 20mA FS output, IF = 200MHz		140		mA
$I_{(DIGVDD)}$	Digital supply current			360		mA
$I_{(DACVDD)}$	DAC supply current			30		mA
$I_{(CLKVDD)}$	Clock supply current			90		mA
P	Power dissipation			1040		mW

(3) To ensure power supply accuracy and to account for power supply filter network loss at operating conditions, the use of the ATEST function in register config27 to check the internal power supply nodes is recommended.
(4) Includes AVDD, PLLAVDD, and IOVDD
(5) PLL operation of 1.25GSPS in Mode 1 is used for maximum power consumption measurement only. Please follow the maximum DAC sample rate (F_{DAC}) guideline in the AC Characteristic Table for proper DAC operation.

Copyright © 2011–2015, Texas Instruments Incorporated

Electrical Characteristics – DC Specifications (continued)

over recommended operating free-air temperature range, nominal supplies, $IOUT_{FS}$ = 20mA (unless otherwise noted)(1)

PARAMETER		TEST CONDITIONS	MIN	TYP	MAX	UNIT
$I_{(AVDD)}$	Analog supply current(4)	Mode 7 f_{DAC} = 1GSPS, 2x interpolation, Mixer off, QMC off, invsinc off, PLL disabled, 20mA FS output, IF = 200MHz		120		mA
$I_{(DIGVDD)}$	Digital supply current			370		mA
$I_{(DACVDD)}$	DAC supply current			30		mA
$I_{(CLKVDD)}$	Clock supply current			65		mA
P	Power dissipation			960		mW

6.6 Electrical Characteristics – Digital Specifications

over operating free-air temperature range (unless otherwise noted)

PARAMETER		TEST CONDITIONS	MIN	TYP	MAX	UNIT
LVDS INPUTS: DAB[15:0]P/N, DCD[15:0]P/N, DATACLKP/N, ISTRP/N, SYNCP/N, PARITYCDP/N(1)						
$V_{A,B+}$	Logic high differential input voltage threshold		200			mV
$V_{A,B-}$	Logic low differential input voltage threshold				–200	mV
V_{COM}	Input Common Mode		1.0	1.2	1.6	V
Z_T	Internal termination		85	110	135	Ω
C_L	LVDS Input capacitance			2		pF
f_{INTERL}	Interleaved LVDS data transfer rate				1250	MSPS
f_{DATA}	Input data rate				625	MSPS
CLOCK INPUT (DACCLKP/N)						
	Differential voltage(2)		0.4	1.0		V
OUTPUT STROBE (OSTRP/N)						
	Differential voltage		0.4	1.0		V
CMOS INTERFACE: ALARM, SDO, SDIO, SCLK, SDENB, SLEEP, RESETB, TXENA						
V_{IH}	High-level input voltage		0.7 x IOVDD2			V
V_{IL}	Low-level input voltage				0.3 x IOVDD2	V
I_{IH}	High-level input current		-40		40	µA
I_{IL}	Low-level input current		-40		40	µA
C_I	CMOS Input capacitance			2		pF
V_{OH}	ALARM, SDO, SDIO	I_{load} = –100 µA	IOVDD2 – 0.2			V
		I_{load} = –2 mA	0.8 x IOVDD2			V
V_{OL}	ALARM, SDO, SDIO	I_{load} = 100 µA			0.2	V
		I_{load} = 2 mA			0.5	V

(1) See *LVDS Inputs* section for terminology.
(2) Driving the clock input with a differential voltage lower than 1 V may result in degraded performance.

Copyright © 2011–2015, Texas Instruments Incorporated

6.7 Electrical Characteristics – AC Specifications

over recommended operating free-air temperature range, nominal supplies, $IOUT_{FS}$ = 20mA (unless otherwise noted)

PARAMETER		TEST CONDITIONS	MIN	TYP	MAX	UNIT
ANALOG OUTPUT(1)						
f_{DAC}	Maximum DAC rate	PLL OFF	1250			MSPS
		PLL ON	1000			
AC PERFORMANCE(2)						
SFDR	Spurious free dynamic range (0 to f_{DAC}/2) Tone at 0 dBFS	f_{DAC} = 1.25 GSPS, f_{OUT} = 20 MHz		73		dBc
		f_{DAC} = 1.25 GSPS, f_{OUT} = 50 MHz		70		
		f_{DAC} = 1.25 GSPS, f_{OUT} = 70 MHz		66		
IMD3	Third-order two-tone intermodulation distortion Each tone at –12 dBFS	f_{DAC} = 1.25 MSPS, f_{OUT} = 30 ± 0.5 MHz		87		dBc
		f_{DAC} = 1.25 GSPS, f_{OUT} = 50 ± 0.5 MHz		85		
		f_{DAC} = 1.25 GSPS, f_{OUT} = 100 ± 0.5 MHz		78		
NSD	Noise Spectral Density(3) Tone at 0dBFS	f_{DAC} = 1.25 GSPS, f_{OUT} = 10 MHz		160		dBc/Hz
		f_{DAC} = 1.25 GSPS, f_{OUT} = 80 MHz		155		
ACLR(3)	Adjacent channel leakage ratio, single carrier	f_{DAC} = 1.2288 GSPS, f_{OUT} = 30.72 MHz		77		dBc
		f_{DAC} = 1.2288 GSPS, f_{OUT} = 153.6 MHz		74		
	Alternate channel leakage ratio, single carrier	f_{DAC} = 1.2288 GSPS, f_{OUT} = 30.72 MHz		82		
		f_{DAC} = 1.2288 GSPS, f_{OUT} = 153.6 MHz		80		
	Channel Isolation	f_{DAC} = 1.25 GSPS, f_{OUT} = 10 MHz		95		dBc

(1) Measured single ended into 50 Ω load.
(2) 4:1 transformer output termination, 50 Ω doubly terminated load
(3) Single carrier, W-CDMA with 3.84 MHz BW, 5-MHz spacing, centered at IF, PAR = 12dB. TESTMODEL 1, 10 ms

6.8 Timing Requirements – Digital Specifications

					MIN	NOM	MAX	UNIT
CLOCK INPUT (DACCLKP/N)								
	Duty cycle				40%		60%	
	DACCLKP/N input frequency						1250	MHz
OUTPUT STROBE (OSTRP/N)								
f_{OSTR}	Frequency	f_{OSTR} = f_{DACCLK} / (n x 8 x Interp) where n is any positive integer, f_{DACCLK} is DACCLK frequency in MHz					f_{DACCLK} / (8 x interp)	MHz
	Duty cycle					50%		
DIGITAL INPUT TIMING SPECIFICATIONS								
Timing LVDS inputs: D[15:0]P/N, FRAMEP/N, SYNCP/N, PARITYP/N, *double edge* latching								
$t_{s(DATA)}$	Setup time, DAB[15:0]P/N, DCD[15:0]P/N, ISTRP/N, SYNCP/N and PARITYP/N, valid to either edge of DATACLKP/N	ISTRP/N and SYNCP/N reset latched only on rising edge of DATACLKP/N	Config36 Setting					
			datadly	clkdly				
			0	0	150			ps
			0	1	100			
			0	2	50			
			0	3	0			
			0	4	-50			
			0	5	-100			
			0	6	-150			
			0	7	-200			
			1	0	200			
			2	0	250			
			3	0	300			
			4	0	350			
			5	0	400			
			6	0	450			
			7	0	500			

Copyright © 2011–2015, Texas Instruments Incorporated

Timing Requirements – Digital Specifications (continued)

					MIN	NOM	MAX	UNIT
$t_{h(DATA)}$	Hold time, DAB[15:0]P/N, DCD[15:0]P/N, ISTRP/N, SYNCP/N and PARITYP/N, valid after either edge of DATACLKP/N	ISTRP/N and SYNCP/N reset latched only on rising edge of DATACLKP/N	Config36 Setting					ps
			datadly	clkdly				
			0	0	400			
			0	1	450			
			0	2	500			
			0	3	550			
			0	4	600			
			0	5	650			
			0	6	700			
			0	7	750			
			1	0	350			
			2	0	300			
			3	0	250			
			4	0	200			
			5	0	150			
			6	0	100			
			7	0	50			
$t_{(ISTR_SYNC)}$	ISTRP/N and SYNCP/N pulse width	$f_{DATACLK}$ is DATACLK frequency in MHz			$1/2f_{DATACLK}$			ns
TIMING OUTPUT STROBE INPUT: DACCLKP/N *rising edge* LATCHING (1)								
$t_{s(OSTR)}$	Setup time, OSTRP/N valid to rising edge of DACCLKP/N				–100			ps
$t_{h(OSTR)}$	Hold time, OSTRP/N valid after rising edge of DACCLKP/N				500			ps
TIMING SYNC INPUT: DACCLKP/N *rising edge* LATCHING (2)								
$t_{s(SYNC_PLL)}$	Setup time, SYNCP/N valid to rising edge of DACCLKP/N					200		ps
$t_{h(SYNC_PLL)}$	Hold time, SYNCP/N valid after rising edge of DACCLKP/N					300		ps
TIMING SERIAL PORT								
$t_{s(SDENB)}$	Setup time, SDENB to rising edge of SCLK				20			ns
$t_{s(SDIO)}$	Setup time, SDIO valid to rising edge of SCLK				10			ns
$t_{h(SDIO)}$	Hold time, SDIO valid to rising edge of SCLK				5			ns
$t_{(SCLK)}$	Period of SCLK	Register *config6* read (temperature sensor read)			1			µs
		All other registers			100			ns
$t_{d(Data)}$	Data output delay after falling edge of SCLK					10		ns
t_{RESET}	Minimum RESETB pulse width					25		ns

(1) OSTR is required in Dual Sync Sources mode. In order to minimize the skew it is recommended to use the same clock distribution device such as Texas Instruments CDCE62005 to provide the DACCLK and OSTR signals to all the DAC34H84 devices in the system. Swap the polarity of the DACCLK outputs with respect to the OSTR ones to establish proper phase relationship.
(2) SYNC is required to synchronize the PLL circuit in multiple devices. The SYNC signal must meet the timing relationship with respect to the reference clock (DACCLKP/N) of the on-chip PLL circuit.

Copyright © 2011–2015, Texas Instruments Incorporated

6.9 Switching Characteristics – AC Specifications

over recommended operating free-air temperature range, nominal supplies, $IOUT_{FS}$ = 20 mA (unless otherwise noted)

PARAMETER		TEST CONDITIONS	MIN	TYP	MAX	UNIT
ANALOG OUTPUT(1)						
$t_{s(DAC)}$	Output settling time to 0.1%	Transition: Code 0x0000 to 0xFFFF		10		ns
t_{pd}	Output propagation delay	DAC outputs are updated on the falling edge of DAC clock. Does not include Digital Latency (see below).		2		ns
$t_{r(IOUT)}$	Output rise time 10% to 90%			220		ps
$t_{f(IOUT)}$	Output fall time 90% to 10%			220		ps
	Digital latency	No interpolation, FIFO on, Mixer off, QMC off, Inverse sinc off		128		DAC clock cycles
		2x Interpolation		216		
		4x Interpolation		376		
		8x Interpolation		726		
		16x Interpolation		1427		
		Fine mixer		24		
		QMC		16		
		Inverse sinc		20		
Power-up Time	DAC wake-up time	IOUT current settling to 1% of $IOUT_{FS}$ from output sleep		2		µs
	DAC sleep time	IOUT current settling to less than 1% of $IOUT_{FS}$ in output sleep		2		

(1) Measured single ended into 50-Ω load.

Copyright © 2011–2015, Texas Instruments Incorporated

6.10 Typical Characteristics

All plots are at 25°C, nominal supply voltage, f_{DAC} = 1250 MSPS, 2x interpolation, NCO enabled, Mixer Gain disabled, QMC enabled with gain set at 1446 for both I/Q channels, 0 dBFS digital input, 20 mA full-scale output current with 4:1 transformer (unless otherwise noted)

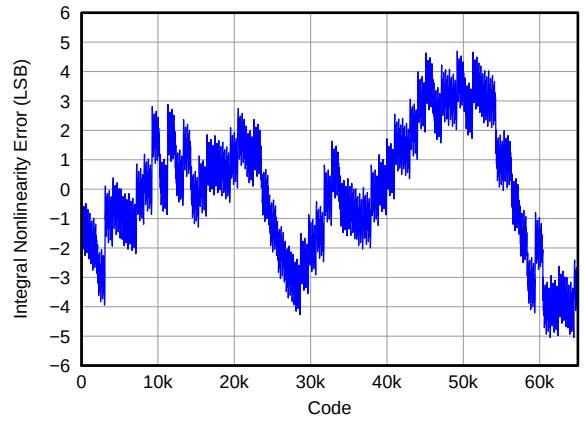

Figure 1. Integral Nonlinearity

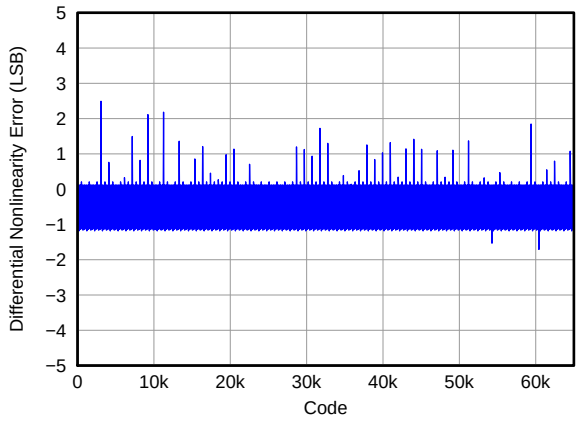

Figure 2. Differential Nonlinearity

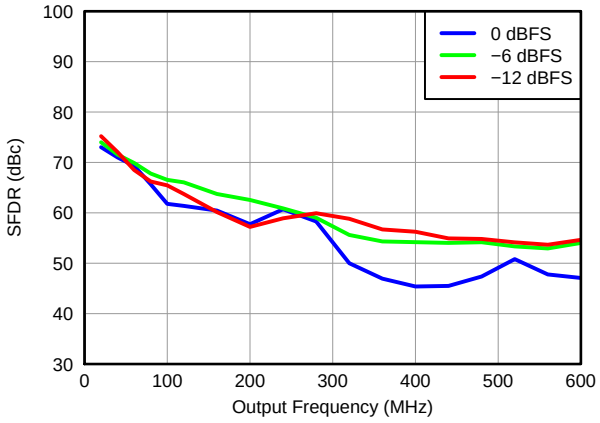

Figure 3. SFDR vs Output Frequency Over Input Scale

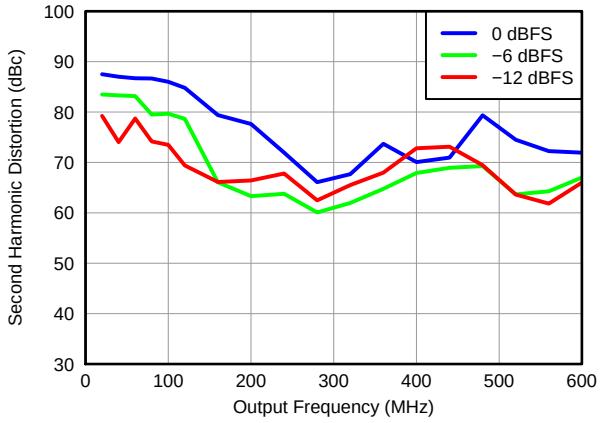

Figure 4. Second Harmonic Distortion vs Output Frequency Over Input Scale

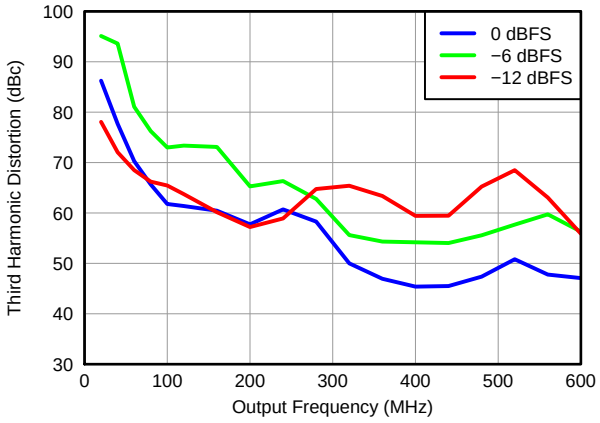

Figure 5. Third Harmonic Distortion vs Output Frequency Over Input Scale

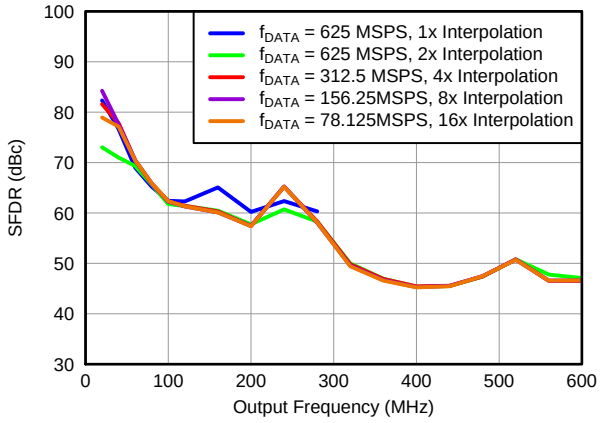

Figure 6. SFDR vs Output Frequency Over Interpolation

Copyright © 2011–2015, Texas Instruments Incorporated

Typical Characteristics (continued)

All plots are at 25°C, nominal supply voltage, f_{DAC} = 1250 MSPS, 2x interpolation, NCO enabled, Mixer Gain disabled, QMC enabled with gain set at 1446 for both I/Q channels, 0 dBFS digital input, 20 mA full-scale output current with 4:1 transformer (unless otherwise noted)

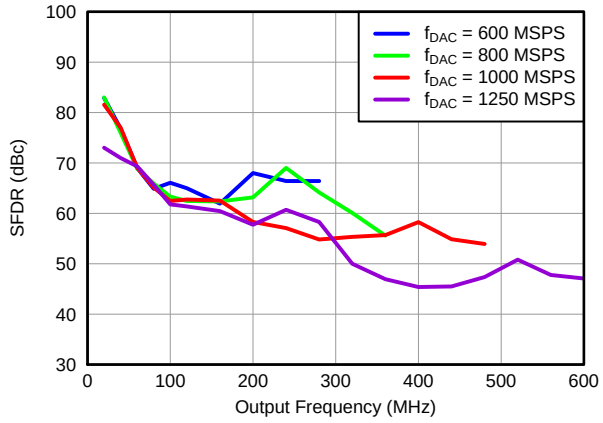

Figure 7. SFDR vs Output Frequency Over f_{DAC}

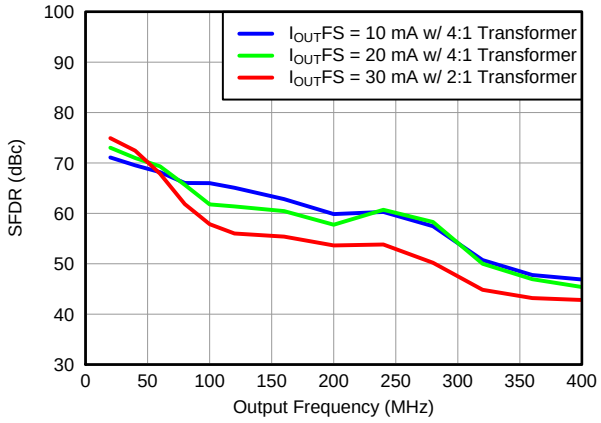

Figure 8. SFDR vs Output Frequency Over $I_{OUT}FS$

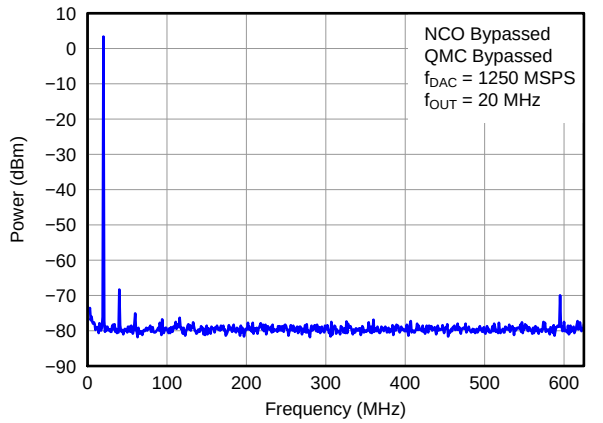

Figure 9. Single Tone Spectral Plot

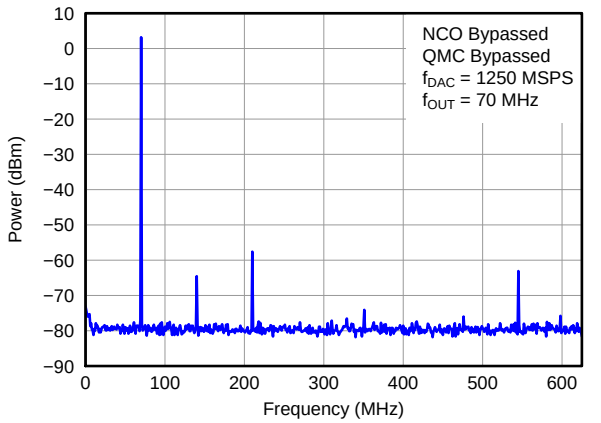

Figure 10. Single Tone Spectral Plot

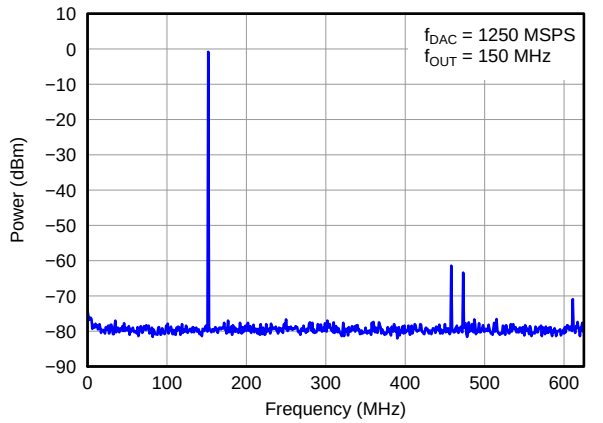

Figure 11. Single Tone Spectral Plot

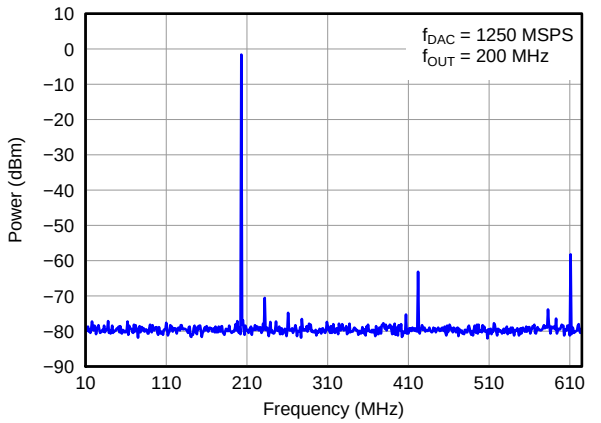

Figure 12. Single Tone Spectral Plot

Copyright © 2011–2015, Texas Instruments Incorporated

Typical Characteristics (continued)

All plots are at 25°C, nominal supply voltage, f_{DAC} = 1250 MSPS, 2x interpolation, NCO enabled, Mixer Gain disabled, QMC enabled with gain set at 1446 for both I/Q channels, 0 dBFS digital input, 20 mA full-scale output current with 4:1 transformer (unless otherwise noted)

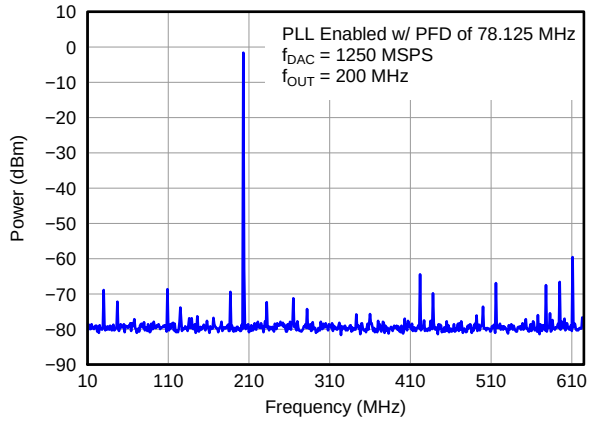

Figure 13. Single Tone Spectral Plot

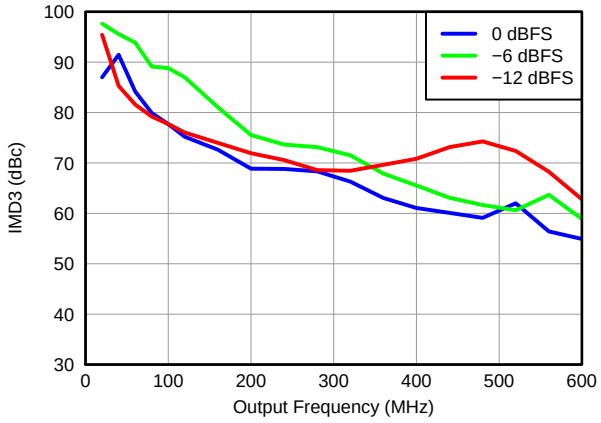

Figure 14. IMD3 vs Output Frequency Over Input Scale

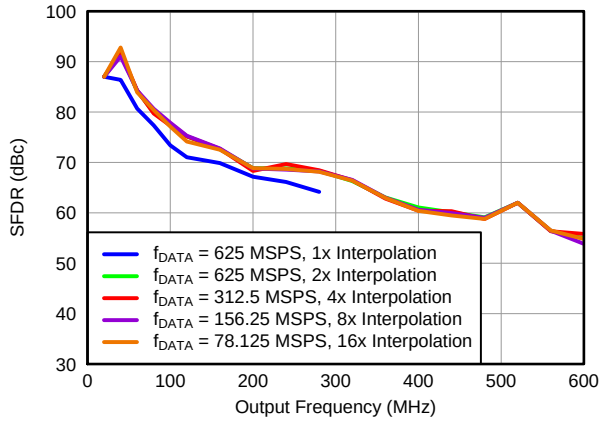

Figure 15. IMD3 vs Output Frequency Over Interpolation

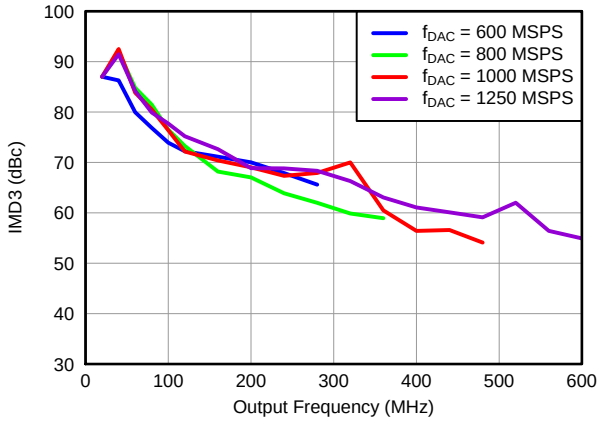

Figure 16. IMD3 vs Output Frequency Over f_{DAC}

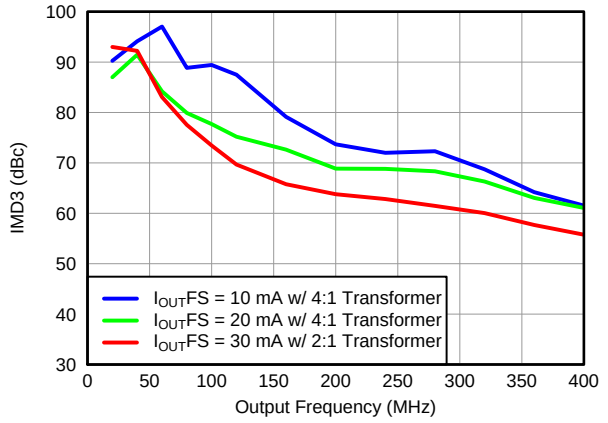

Figure 17. IMD3 vs Output Frequency Over I_{OUT}FS

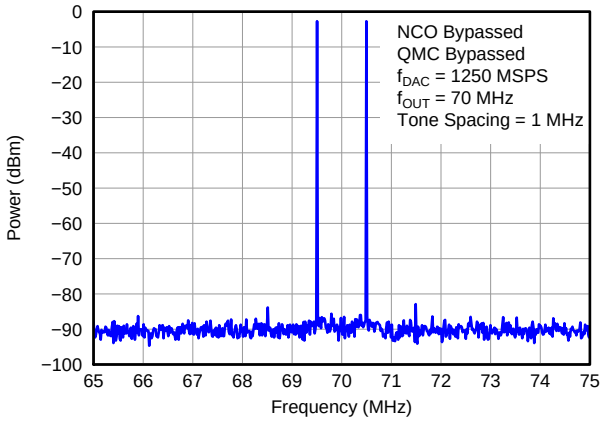

Figure 18. Two Tone Spectral Plot

Copyright © 2011–2015, Texas Instruments Incorporated

Typical Characteristics (continued)

All plots are at 25°C, nominal supply voltage, f_{DAC} = 1250 MSPS, 2x interpolation, NCO enabled, Mixer Gain disabled, QMC enabled with gain set at 1446 for both I/Q channels, 0 dBFS digital input, 20 mA full-scale output current with 4:1 transformer (unless otherwise noted)

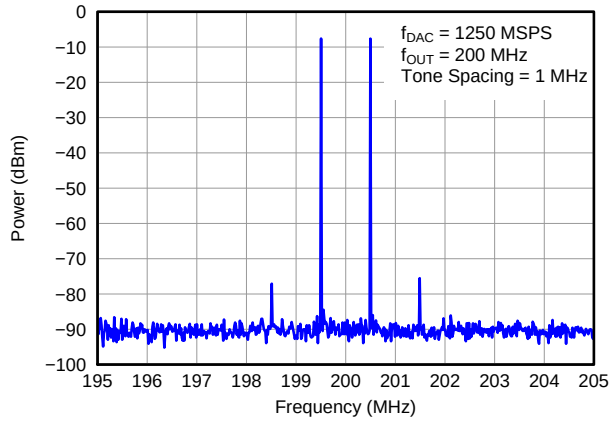

Figure 19. Two Tone Spectral Plot

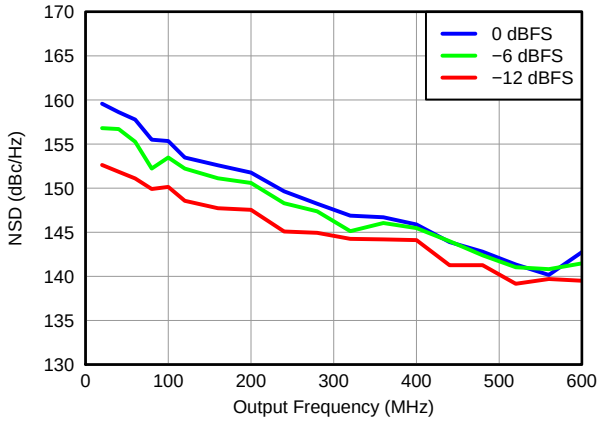

Figure 20. NSD vs Output Frequency Over Input Scale

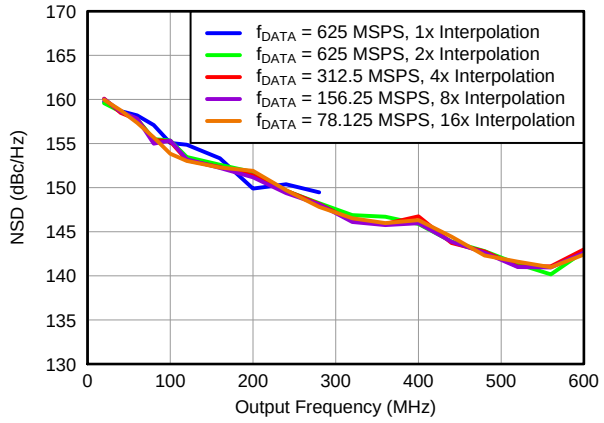

Figure 21. NSD vs Output Frequency Over Interpolation

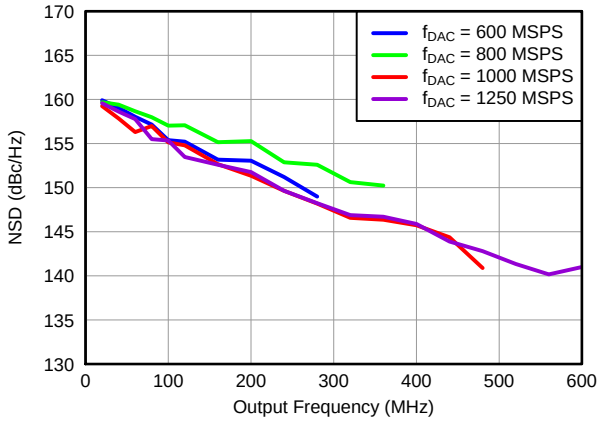

Figure 22. NSD vs Output Frequency Over f_{DAC}

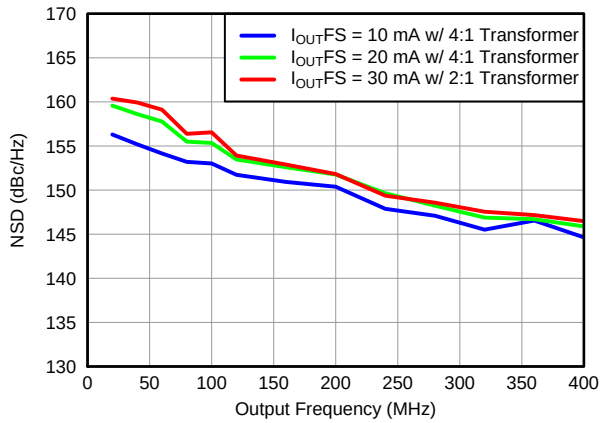

Figure 23. NSD vs Output Frequency Over I_{OUT}FS

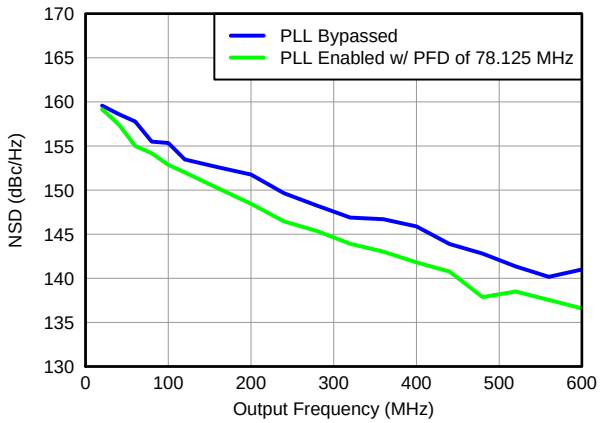

Figure 24. NSD vs Output Frequency Over Clocking Options

Copyright © 2011–2015, Texas Instruments Incorporated

Typical Characteristics (continued)

All plots are at 25°C, nominal supply voltage, f_{DAC} = 1250 MSPS, 2x interpolation, NCO enabled, Mixer Gain disabled, QMC enabled with gain set at 1446 for both I/Q channels, 0 dBFS digital input, 20 mA full-scale output current with 4:1 transformer (unless otherwise noted)

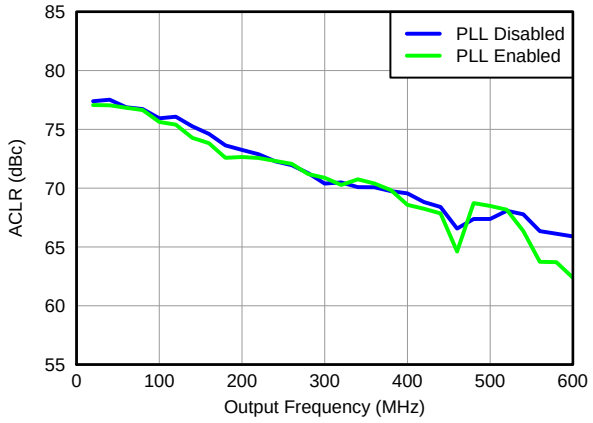

Figure 25. Single Carrier WCDMA ACLR (Adjacent) vs Output Frequency Over Clocking Options

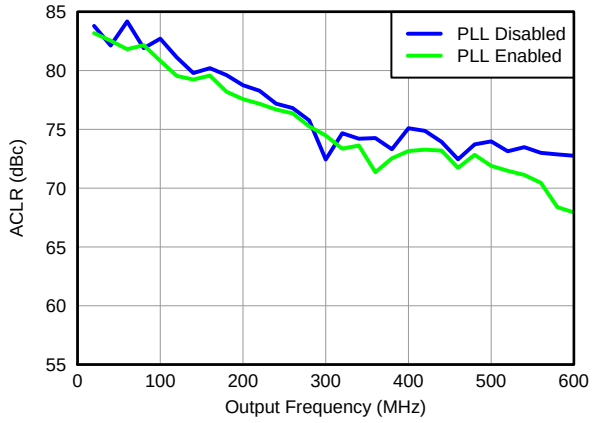

Figure 26. Single Carrier WCDMA ACLR (Alternate) vs Output Frequency Over Clocking Options

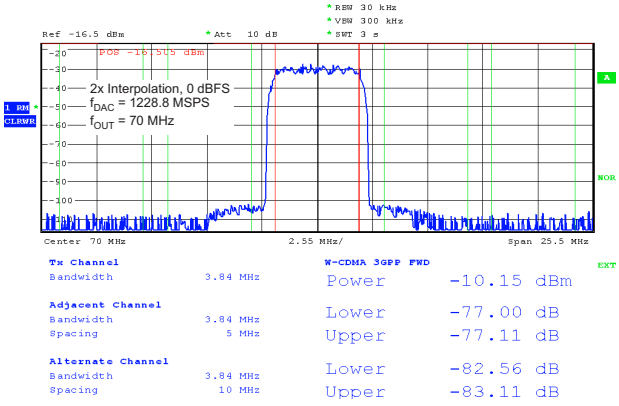

Figure 27. Single Carrier W-CDMA Test Model 1

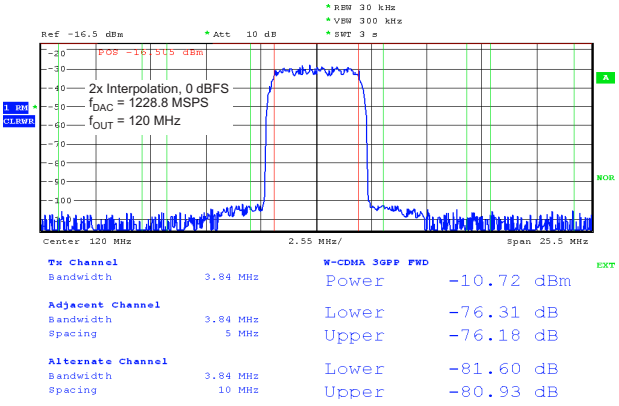

Figure 28. Single Carrier W-CDMA Test Model 1

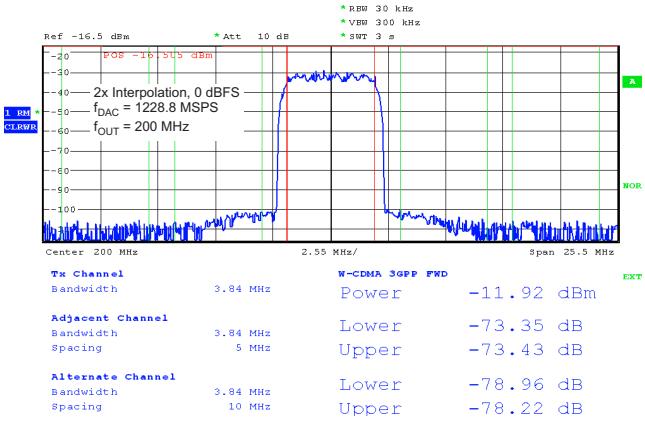

Figure 29. Single Carrier W-CDMA Test Model 1

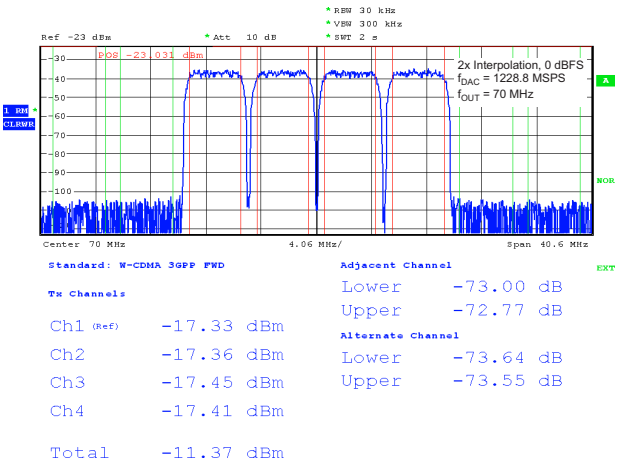

Figure 30. Four Carrier W-CDMA Test Model 1

Copyright © 2011–2015, Texas Instruments Incorporated

Typical Characteristics (continued)

All plots are at 25°C, nominal supply voltage, f_{DAC} = 1250 MSPS, 2x interpolation, NCO enabled, Mixer Gain disabled, QMC enabled with gain set at 1446 for both I/Q channels, 0 dBFS digital input, 20 mA full-scale output current with 4:1 transformer (unless otherwise noted)

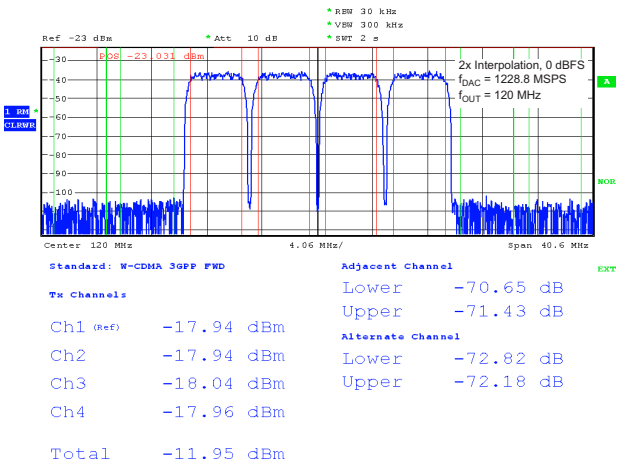

Figure 31. Four Carrier W-CDMA Test Model 1

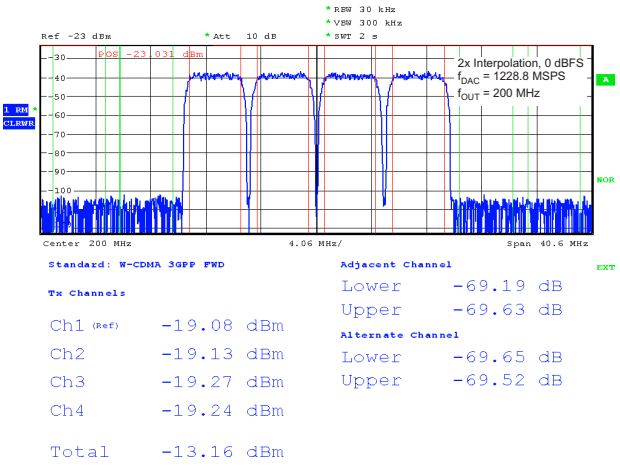

Figure 32. Four Carrier W-CDMA Test Model 1

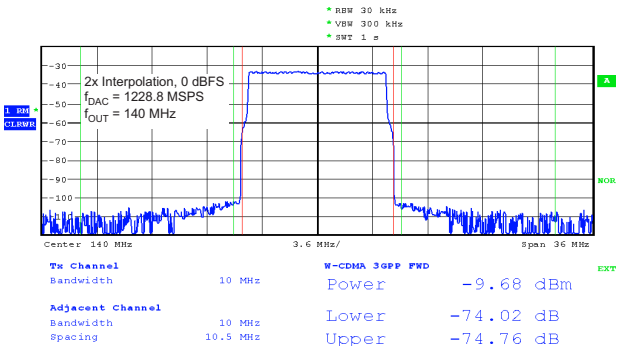

Figure 33. 10 MHz Single Carrier LTE Test Model 3.1

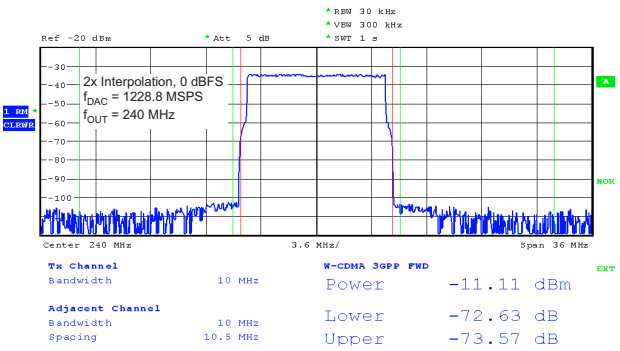

Figure 34. 10 MHz Single Carrier LTE Test Model 3.1

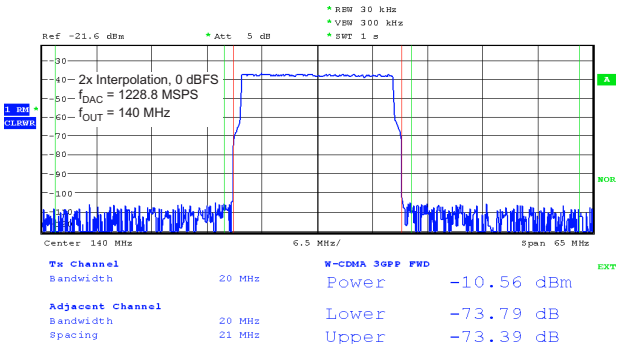

Figure 35. 20 MHz Single Carrier LTE Test Model 3.1

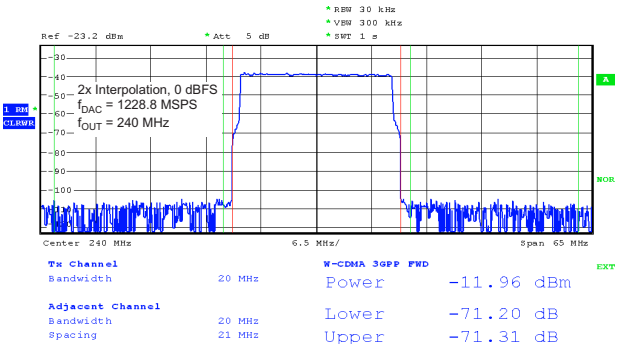

Figure 36. 20 MHz Single Carrier LTE Test Model 3.1

Copyright © 2011–2015, Texas Instruments Incorporated

Typical Characteristics (continued)

All plots are at 25°C, nominal supply voltage, f_{DAC} = 1250 MSPS, 2x interpolation, NCO enabled, Mixer Gain disabled, QMC enabled with gain set at 1446 for both I/Q channels, 0 dBFS digital input, 20 mA full-scale output current with 4:1 transformer (unless otherwise noted)

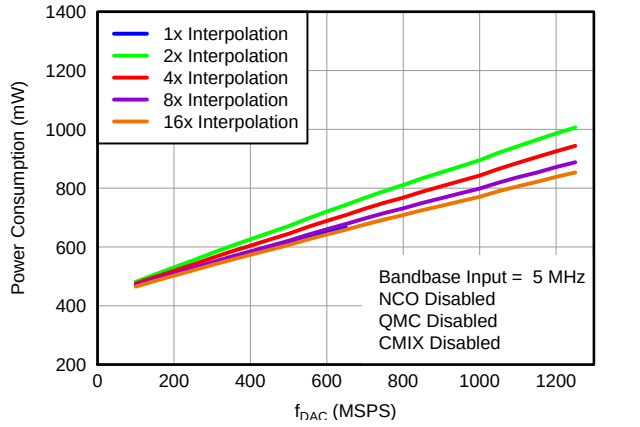

Figure 37. Power Consumption vs f_{DAC} Over Interpolation

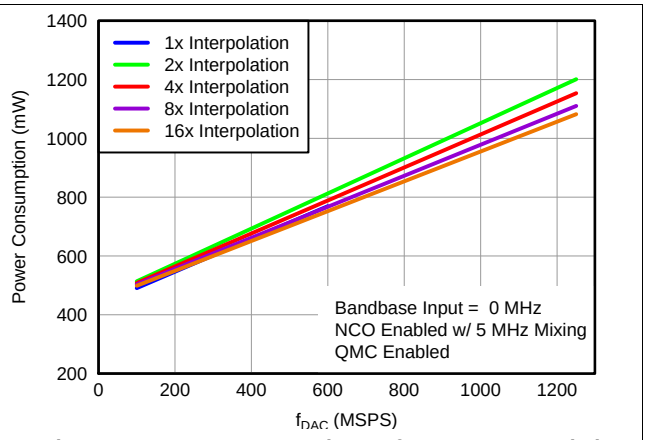

Figure 38. Power Consumption vs f_{DAC} Over Interpolation

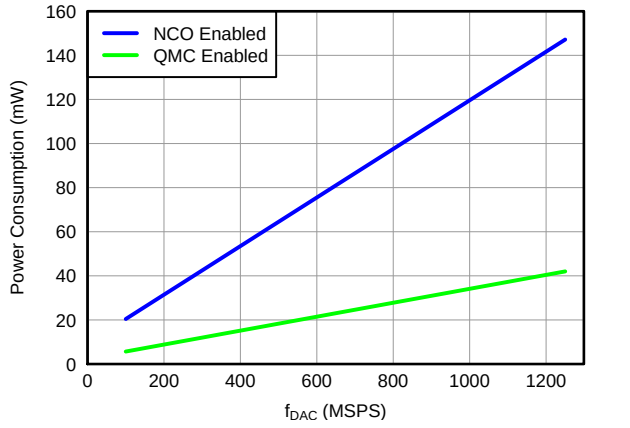

Figure 39. Power Consumption vs f_{DAC} Over Digital Processing Functions

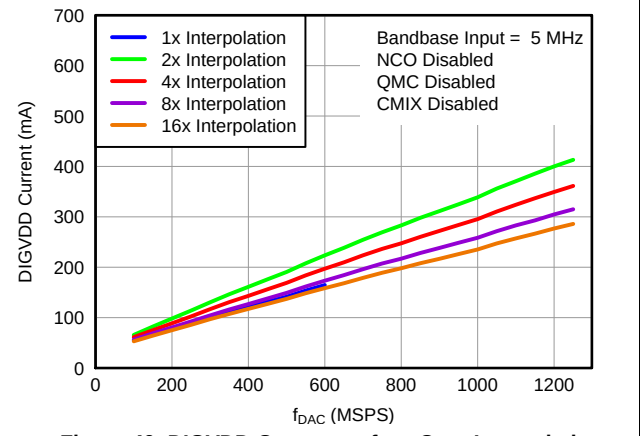

Figure 40. DIGVDD Current vs f_{DAC} Over Interpolation

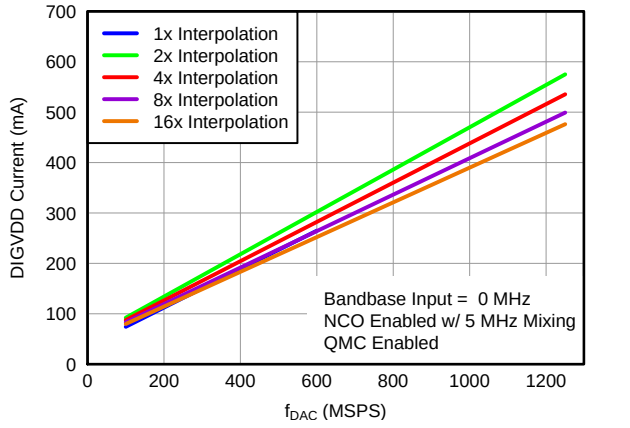

Figure 41. DIGVDD Current vs f_{DAC} Over Interpolation

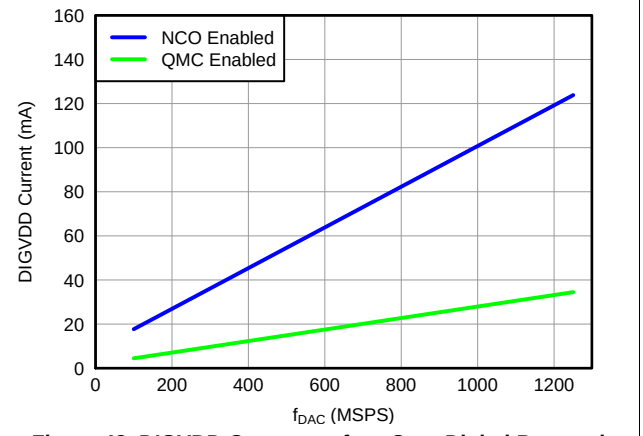

Figure 42. DIGVDD Current vs f_{DAC} Over Digital Processing Functions

Copyright © 2011–2015, Texas Instruments Incorporated

Typical Characteristics (continued)

All plots are at 25°C, nominal supply voltage, f_{DAC} = 1250 MSPS, 2x interpolation, NCO enabled, Mixer Gain disabled, QMC enabled with gain set at 1446 for both I/Q channels, 0 dBFS digital input, 20 mA full-scale output current with 4:1 transformer (unless otherwise noted)

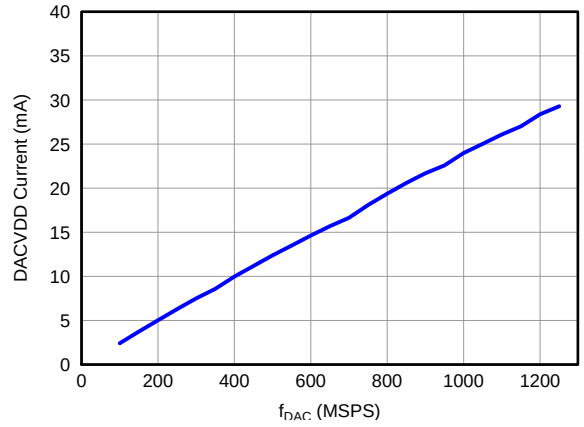

Figure 43. DACVDD Current vs f_{DAC}

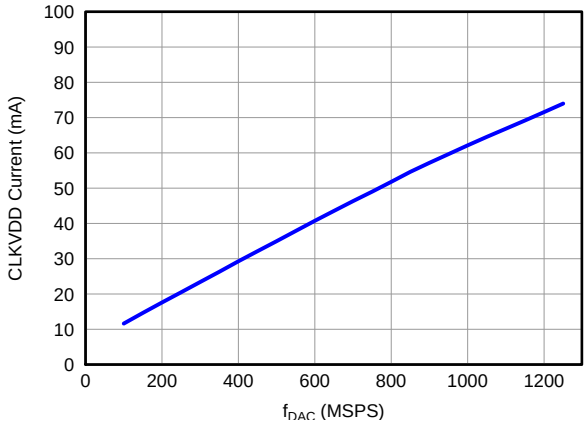

Figure 44. CLKVDD Current vs f_{DAC}

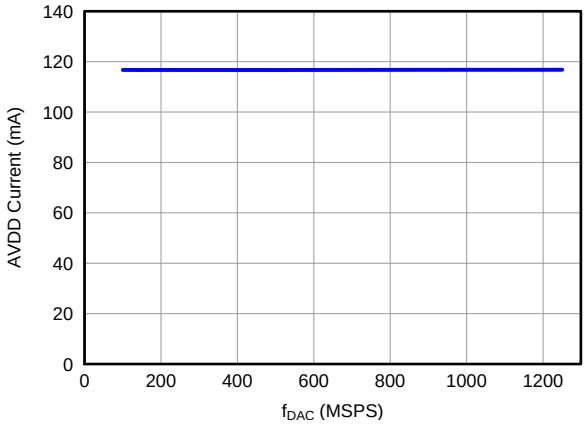

Figure 45. AVDD Current vs f_{DAC}

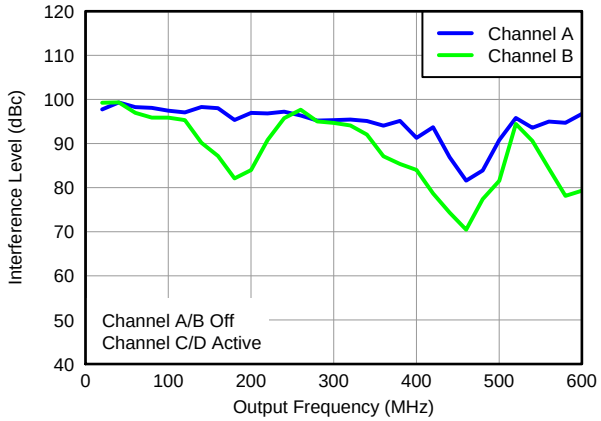

Figure 46. Channel Isolation vs Output Frequency

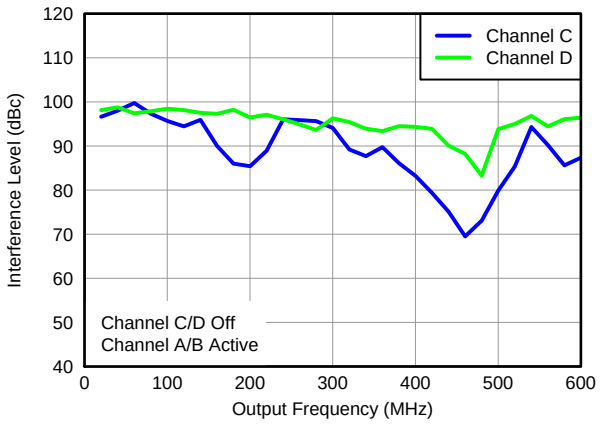

Figure 47. Channel Isolation vs Output Frequency

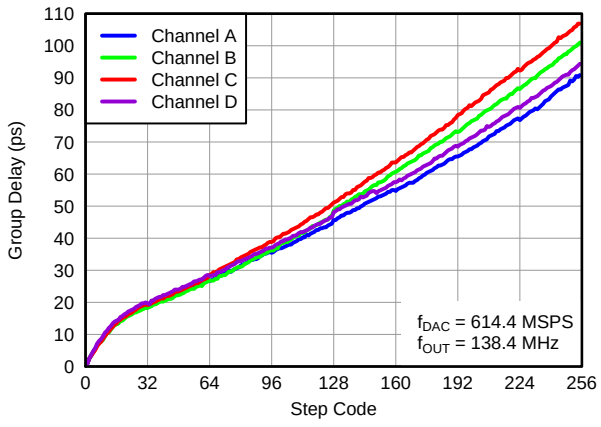

Figure 48. Group Delay vs Step Code

7 Detailed Description

7.1 Overview

The DAC34H84 includes a quad-channel, 16-bit digital-to-analog converter (DAC) with up to 1.25 GSPS sample rate, a 32-bit LVDS data bus with on-chip termination, FIFO, data pattern checker, and parity test. The device includes 2x to 16x digital interpolation filters with over 90dB of stop-band attenuation, reconstruction filters, independent complex mixers, a low jitter clock multiplier, and digital Quadrature Modulator Correction (QMC).

Full synchronization of multiple devices is possible with the DAC3484. It is an ideal device for next generation communication systems.

Copyright © 2011–2015, Texas Instruments Incorporated

7.2 Functional Block Diagram

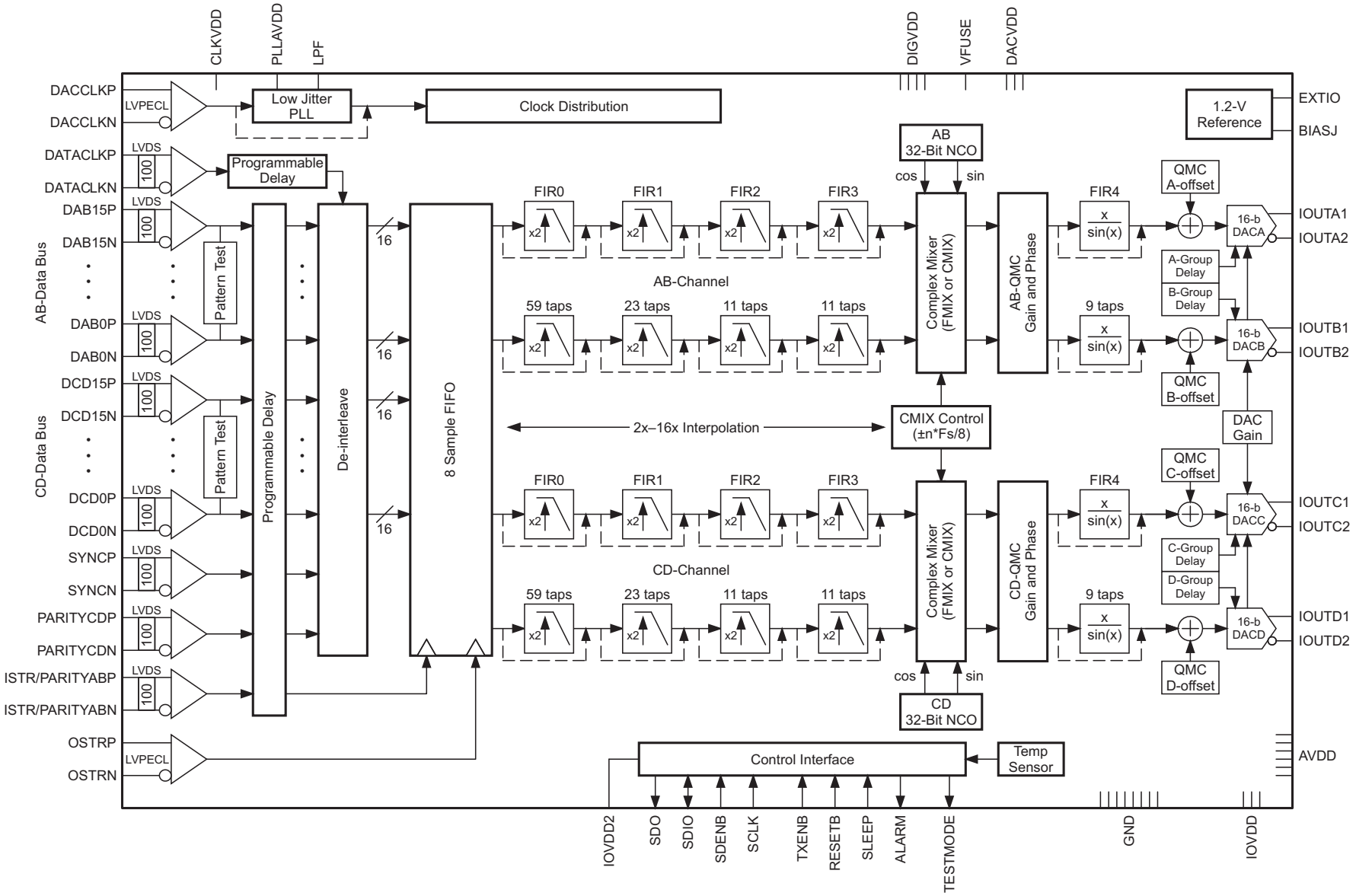

B0460-01

Copyright © 2011–2015, Texas Instruments Incorporated

7.3 Feature Description

7.3.1 Serial Interface

The serial port of the DAC34H84 is a flexible serial interface which communicates with industry standard microprocessors and microcontrollers. The interface provides read/write access to all registers used to define the operating modes of DAC34H84. It is compatible with most synchronous transfer formats and can be configured as a 3 or 4 pin interface by *sif4_ena* in register *config2*. In both configurations, SCLK is the serial interface input clock and SDENB is serial interface enable. For 3 pin configuration, SDIO is a bidirectional pin for both data in and data out. For 4 pin configuration, SDIO is data in only and SDO is data out only. Data is input into the device with the rising edge of SCLK. Data is output from the device on the falling edge of SCLK.

Each read/write operation is framed by signal SDENB (Serial Data Enable Bar) asserted low. The first frame byte is the instruction cycle which identifies the following data transfer cycle as read or write as well as the 7-bit address to be accessed. Table 1 indicates the function of each bit in the instruction cycle and is followed by a detailed description of each bit. The data transfer cycle consists of two bytes

Table 1. Instruction Byte of the Serial Interface

BIT	7 (MSB)	6	5	4	3	2	1	0 (LSB)
Description	R/W	A6	A5	A4	A3	A2	A1	A0

R/W Identifies the following data transfer cycle as a read or write operation. A high indicates a read operation from DAC34H84 and a low indicates a write operation to DAC34H84.

[A6 : A0] Identifies the address of the register to be accessed during the read or write operation.

Figure 49 shows the serial interface timing diagram for a DAC34H84 write operation. SCLK is the serial interface clock input to DAC34H84. Serial data enable SDENB is an active low input to DAC34H84. SDIO is serial data in. Input data to DAC34H84 is clocked on the rising edges of SCLK.

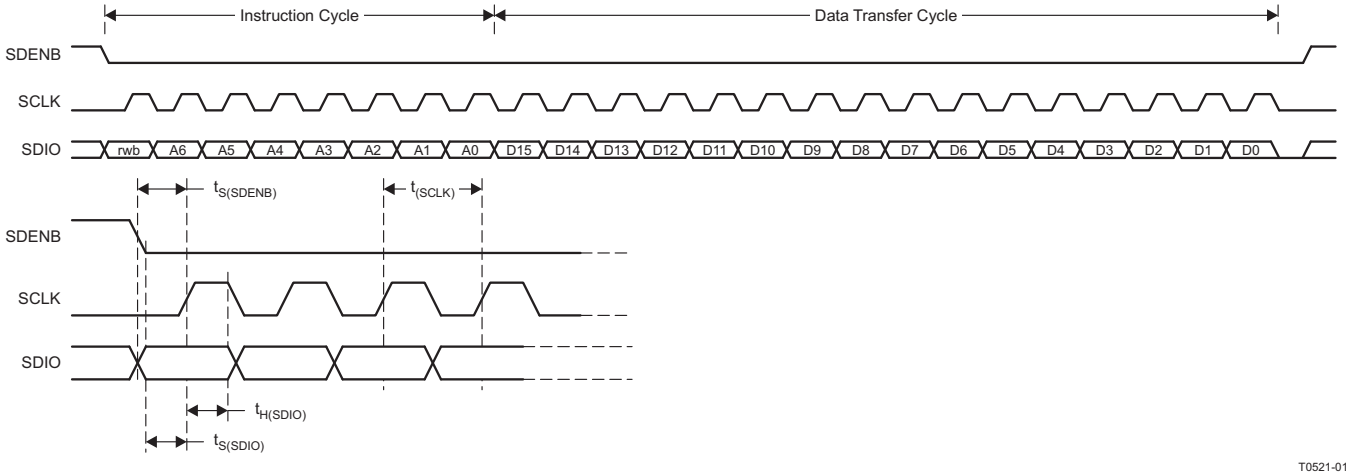

Figure 49. Serial Interface Write Timing Diagram

Figure 50 shows the serial interface timing diagram for a DAC34H84 read operation. SCLK is the serial interface clock input to DAC34H84. Serial data enable SDENB is an active low input to DAC34H84. SDIO is serial data in during the instruction cycle. In 3 pin configuration, SDIO is data out from the DAC34H84 during the data transfer cycle, while SDO is in a high-impedance state. In 4 pin configuration, SDO is data out from the DAC34H84 during the data transfer cycle. At the end of the data transfer, SDIO and SDO will output low on the final falling edge of SCLK until the rising edge of SDENB when it will 3-state.

Copyright © 2011–2015, Texas Instruments Incorporated

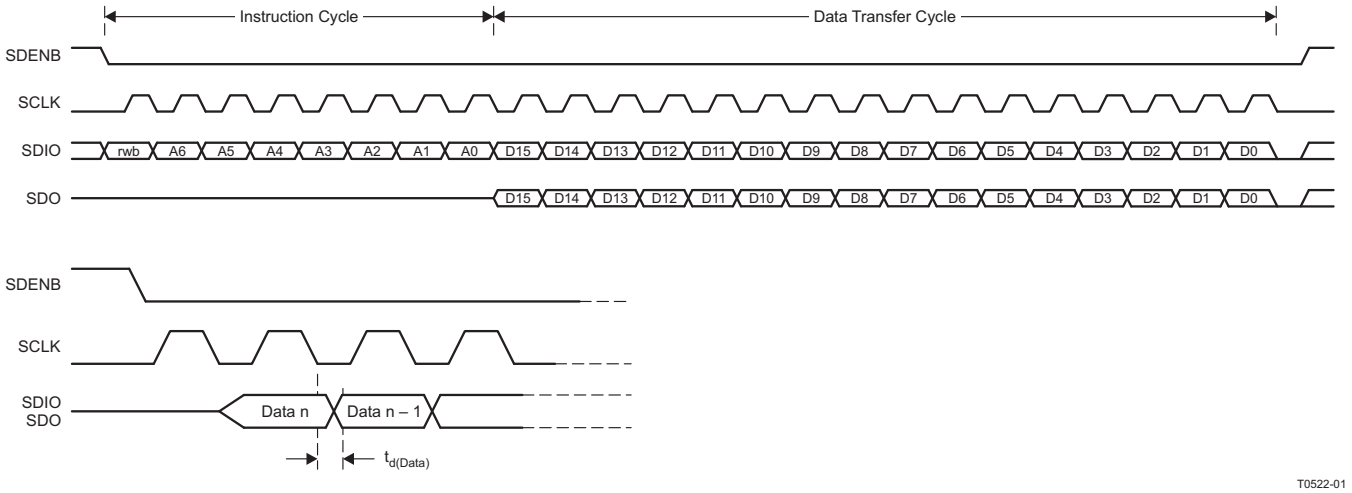

Figure 50. Serial Interface Read Timing Diagram

7.3.2 Data Interface

The DAC34H84 has a 32-bit LVDS bus that accepts quad, 16-bit data in word-wide format. The quad-16-bit data can be input to the device using a dual-bus, 16-bit interface. The bus accepts LVDS transfer rates up to 1.25GSPS which corresponds to a maximum data rate of 625MSPS per data channel. The default LVDS bus input assignment is shown in Table 2.

Table 2. LVDS Bus Input Assignment

DATA PATHS	PINS
A and B	DAB[15..0]
C and D	DCD[15..0]

Data is sampled by the LVDS double data rate (DDR) clock DATACLK. Setup and hold requirements must be met for proper sampling. A and C data are captured on the rising edge of DATACLK. B and D data are captured on the falling edge of DATACLK.

For both input bus modes, a sync signal, either ISTR or SYNC, is required to sync the FIFO read and/or write pointers.

The sync signal, either ISTR or SYNC, can be either a pulse or a periodic signal where the sync period corresponds to multiples of 8 samples. ISTR or SYNC is sampled by a rising edge in DATACLK. The pulse-width $t_{(ISTR_SYNC)}$ needs to be at least equal to 1/2 of the DATACLK period.

7.3.3 Data Format

The 16-bit data for channels A and B is interleaved in the form $A_0[15:0]$, $B_0[15:0]$, $A_1[15:0]$, $B_1[15:0]$, $A_2[15:0]$… into the DAB[15:0]P/N LVDS inputs. Similarly data for channels C and D is interleaved into the DCD[15:0]P/N LVDS inputs. Data into the DAC34H84 is formatted according to the diagram shown in Figure 51 where index 0 is the data LSB and index 15 is the data MSB.

Copyright © 2011–2015, Texas Instruments Incorporated

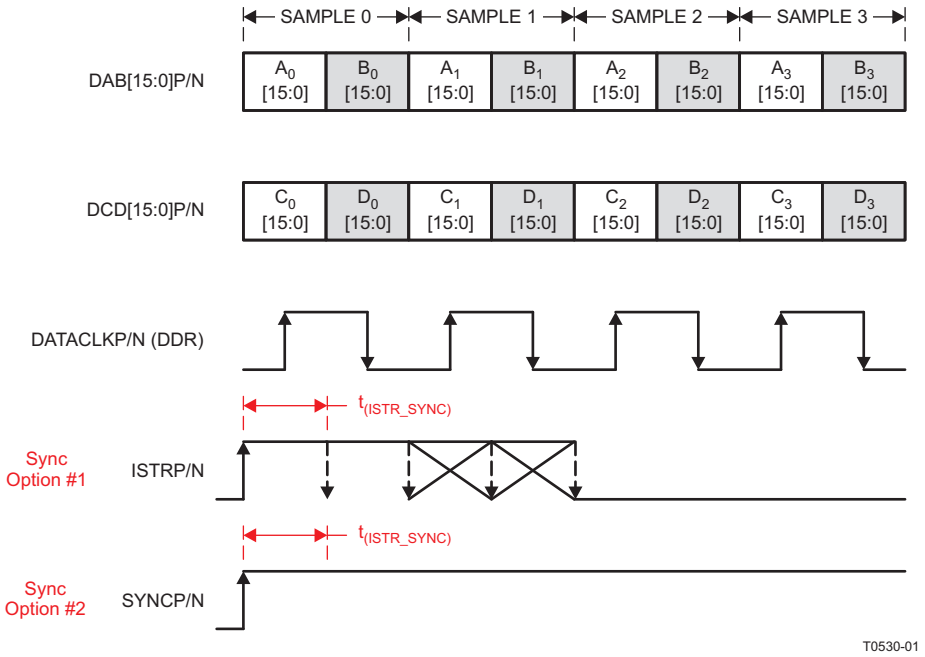

Figure 51. Data Transmission Format

The FIFO read and write pointer can also be synced by SIF SYNC as the third sync option if multi-device synchronization is not needed. In this sync mode, the *syncsel_fifoin(3:0)* and *syncsel_fifoout(3:0)* in register config32 need to be both set to 1000b for the SIF SYNC option.

7.3.4 Input FIFO

The DAC34H84 includes a 4-channel, 16-bits wide and 8-samples deep input FIFO which acts as an elastic buffer. The purpose of the FIFO is to absorb any timing variations between the input data and the internal DAC data rate clock such as the ones resulting from clock-to-data variations from the data source.

Figure 52 shows a simplified block diagram of the FIFO.

Copyright © 2011–2015, Texas Instruments Incorporated

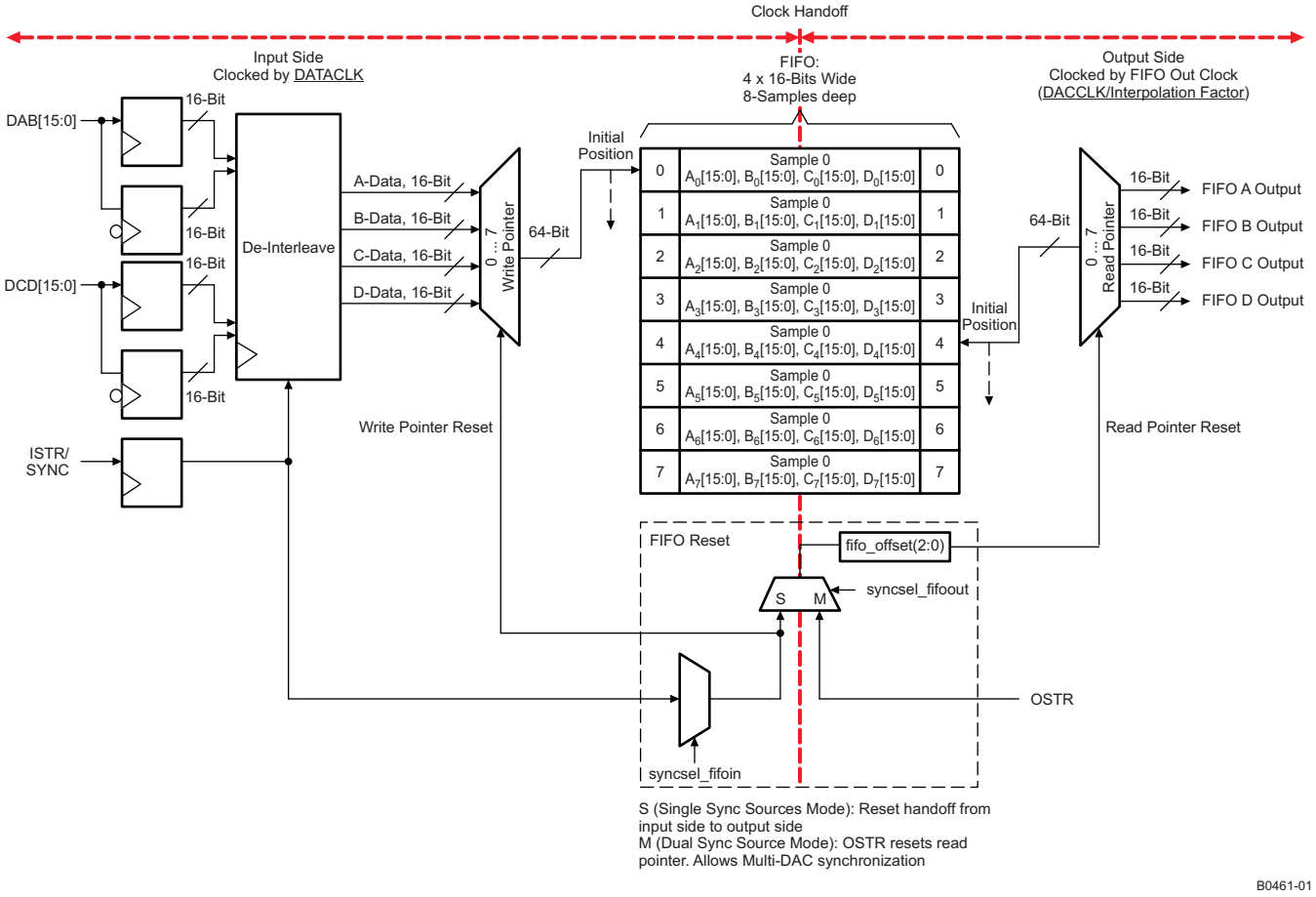

Figure 52. DAC34H84 FIFO Block Diagram

Data is written to the device 32-bits at a time on the rising and falling edges of DATACLK. In order to form a complete 64-bit wide sample (16-bit A-data, 16-bit B-data, 16-bit C-data, and 16-bit D-data) one DATACLK period is required. Each 64-bit wide sample is written into the FIFO at the address indicated by the write pointer. Similarly, data from the FIFO is read by the FIFO Out Clock 64-bits at a time from the address indicated by the read pointer. The FIFO Out Clock is generated internally from the DACCLK signal and its rate is equal to DACCLK/Interpolation. Each time a FIFO write or FIFO read is done the corresponding pointer moves to the next address.

The reset position for the FIFO read and write pointers is set by default to addresses 0 and 4 as shown in Figure 52. This offset gives optimal margin within the FIFO. The default read pointer location can be set to another value using *fifo_offset(2:0)* in register *config3* (address 4 by default). Under normal conditions data is written-to and read-from the FIFO at the same rate and consequently the write and read pointer gap remains constant. If the FIFO write and read rates are different, the corresponding pointers will be cycling at different speeds which could result in pointer collision. Under this condition the FIFO attempts to read and write data from the same address at the same time which will result in errors and thus must be avoided.

The write pointer sync source is selected by *syncsel_fifoin(3:0)* in register *config32*. In most applications either ISTR or SYNC are used to reset the write pointer. Unlike DATA, the sync signal is latched only on the rising edges of DATACLK. A rising edge on the sync signal source causes the pointer to return to its original position.

Similarly, the read pointer sync source is selected by *syncsel_fifoout(3:0)*. The write pointer sync source can be set to reset the read pointer as well. In this case, the FIFO Out clock will recapture the write pointer sync signal to reset the read pointer. This clock domain transfer (DATACLK to FIFO Out Clock) results in phase ambiguity of the sync signal. This limits the precise control of the output timing and makes full synchronization of multiple devices difficult.

Copyright © 2011–2015, Texas Instruments Incorporated

To alleviate this, the device offers the alternative of resetting the FIFO read pointer independently of the write pointer by using the OSTR signal. The OSTR signal is sampled by DACCLK and must satisfy the timing requirements in the specifications table. In order to minimize the skew it is recommended to use the same clock distribution device such as Texas Instruments CDCE62005 to provide the DACCLK and OSTR signals to all the DAC34H84 devices in the system. Swapping the polarity of the DACCLK outputs with respect to the OSTR ones establishes proper phase relationship.

The FIFO pointers reset procedure can be done periodically or only once during initialization as the pointers automatically return to the initial position when the FIFO has been filled. To reset the FIFO periodically, it is necessary to have the ISTR, SYNC, and OSTR signals to repeat at multiples of 8 FIFO samples. To disable FIFO reset, set *syncsel_fifoin(3:0)* and *syncsel_fifoout(3:0)* to “0000”.

The frequency limitation for ISTR and SYNC signals are the following:

$f_{sync} = f_{DATACLK}/(n \times 8)$ where n = 1, 2, …

The frequency limitation for the OSTR signal is the following:

$f_{OSTR} = f_{DAC}/(n \times \text{interpolation} \times 8)$ where n = 1, 2, …

The frequencies above are at maximum when n = 1. This is when the ISTR, SYNC, or OSTR have a rising edge transition every 8 FIFO samples. The occurrence can be made less frequent by setting n > 1, for example, every n × 8 FIFO samples.

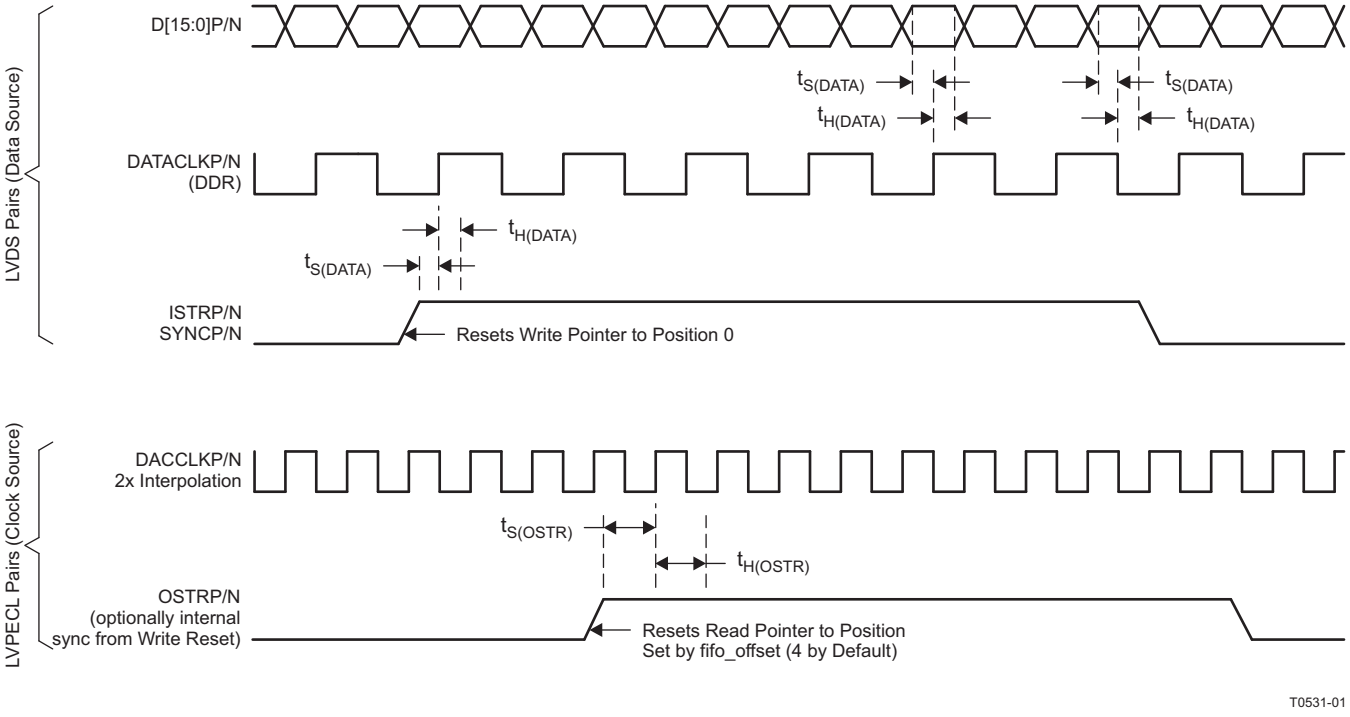

Figure 53. FIFO Write and Read Descriptions

7.3.5 FIFO Modes of Operation

The DAC34H84 input FIFO can be completely bypassed through registers *config0* and *config32*. The register configuration for each mode is described in Table 3.

Register	Control Bits
config0	fifo_ena
config32	syncsel_fifoout(3:0)

Copyright © 2011–2015, Texas Instruments Incorporated

Table 3. FIFO Operation Modes

FIFO MODE	*config0* AND *config32* FIFO BITS				
	fifo_ena	syncsel_fifoout			
		BIT 3: sif_sync	BIT 2: OSTR	BIT 1: ISTR	BIT 0: SYNC
Dual Sync Sources	1	0	1	0	0
Single Sync Source	1	0	0	1 or 0 Depends on the sync source	1 or 0 Depends on the sync source
Bypass	0	X	X	X	X

7.3.5.1 Dual Sync Sources Mode

This is the recommended mode of operation for those applications that require precise control of the output timing. In Dual Sync Sources mode, the FIFO write and read pointers are reset independently. The FIFO write pointer is reset using the LVDS ISTR or SYNC signal, and the FIFO read pointer is reset using the LVPECL OSTR signal. This allows LVPECL OSTR signal to control the phase of the output for either a single chip or multiple chips. Multiple devices can be fully synchronized in this mode.

7.3.5.2 Single Sync Source Mode

In Single Sync Source mode, the FIFO write and read pointers are reset from the same source, either LVDS ISTR or LVDS SYNC signal. This mode has a possibility of up to 2 DAC clocks offset between the multiple DAC outputs. Applications requiring exact output timing control will need Dual Sync Sources mode instead of Single Sync Source Mode. A single rising edge for FIFO and clock divider sync is recommended. Periodic sync signal is not recommended due to the non-deterministic latency of the sync signal through the clock domain transfer.

In this mode, there is a chance for FIFO pointers 2 away alarm (or possibly 1 away alarm) to occur at initial setup/syncing. This is the result of Single Sync Source mode having 0 to 3 address location slip, which is caused by the asynchronous handoff of the sync signal occurring between the DATACLK zone and DACCLK zone. The asynchronous relationship between the clock domains means there could be a slip (from nominal) in the READ and Write pointers at initial syncing. For example, with the default programming of FIFO Offset of 4, the actual FIFO Offset may be 3, 2, or in some instances, 1. Please note that in this mode, the nominal address location slip is 0 with the possibility getting less for each increase in slip amount. Also, the slip does not continue to occur as the device functions, but the READ/WRITE pointers may not be at optimal settings. In situation of alarm occurrence:

1. Adjust the FIFO offset accordingly and resynchronize the FIFO, data formatter, etc such that there are no alarm reported or at least only 2 away alarm is reported.
2. The FIFO collision alarm is a warning of the system since the read and write processes occur at the same pointer. However, the FIFO 1 away or 2 away alarms are informational for the system designer. The important thing for these two alarms is that the alarm should not get closer to collision during normal operation. If 1 away alarm and alarm collision starts to occur, it is a warning to check for system errors. The system should have an interrupt or algorithm to fix the error and resynchronize the alarm appropriately.

7.3.5.3 Bypass Mode

In FIFO bypass mode, the FIFO block is not used. As a result the input data is handed off from the DATACLK to the DACCLK domain without any compensation. In this mode the relationship between DATACLK and DACCLK is critical and used as a synchronizing mechanism for the internal logic. Due to this constraint this mode is ***not recommended***. In bypass mode the pointers have no effect on the data path or handoff.

7.3.6 Clocking Modes

The DAC34H84 has a dual clock setup in which a DAC clock signal is used to clock the DAC cores and internal digital logic and a separate DATA clock is used to clock the input LVDS receivers and FIFO input. The DAC34H84 DAC clock signal can be sourced directly or generated through an on-chip low-jitter phase-locked loop (PLL).

In those applications requiring extremely low noise it is recommended to bypass the PLL and source the DAC clock directly from a high-quality external clock to the DACCLK input. In most applications system clocking can be simplified by using the on-chip PLL to generate the DAC core clock while still satisfying performance requirements. In this case the DACCLK pins are used as the reference frequency input to the PLL.

Copyright © 2011–2015, Texas Instruments Incorporated

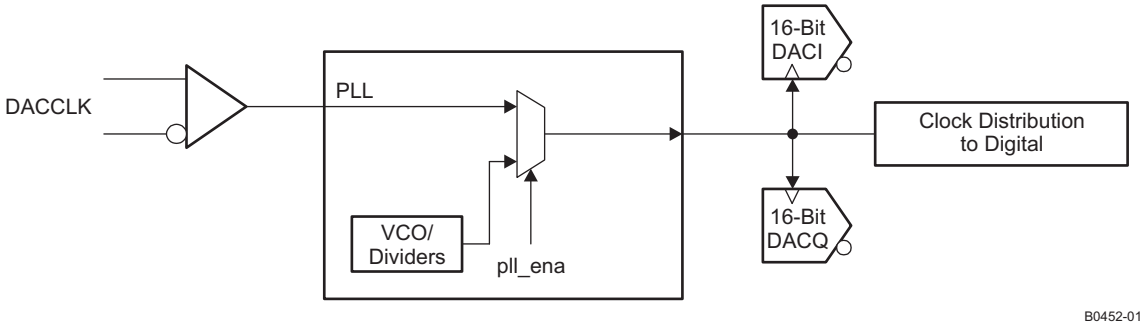

Figure 54. Top Level Clock Diagram

7.3.6.1 PLL Bypass Mode

In PLL bypass mode a very high quality clock is sourced to the DACCLK inputs. This clock is used to directly source the DAC34H84 DAC sample rate clock. This mode gives the device best performance and is recommended for extremely demanding applications.

The bypass mode is selected by setting the following:

1. *pll_ena* bit in register *config24* to 0b to bypass the PLL circuitry.
2. *pll_sleep* bit in register *config26* to 1b to put the PLL and VCO into sleep mode.

7.3.6.2 PLL Mode

In this mode the clock at the DACCLKP/N input functions as a reference clock source to the on-chip PLL. The on-chip PLL will then multiply this reference clock to supply a higher frequency DAC sample rate clock. Figure 55 shows the block diagram of the PLL circuit.

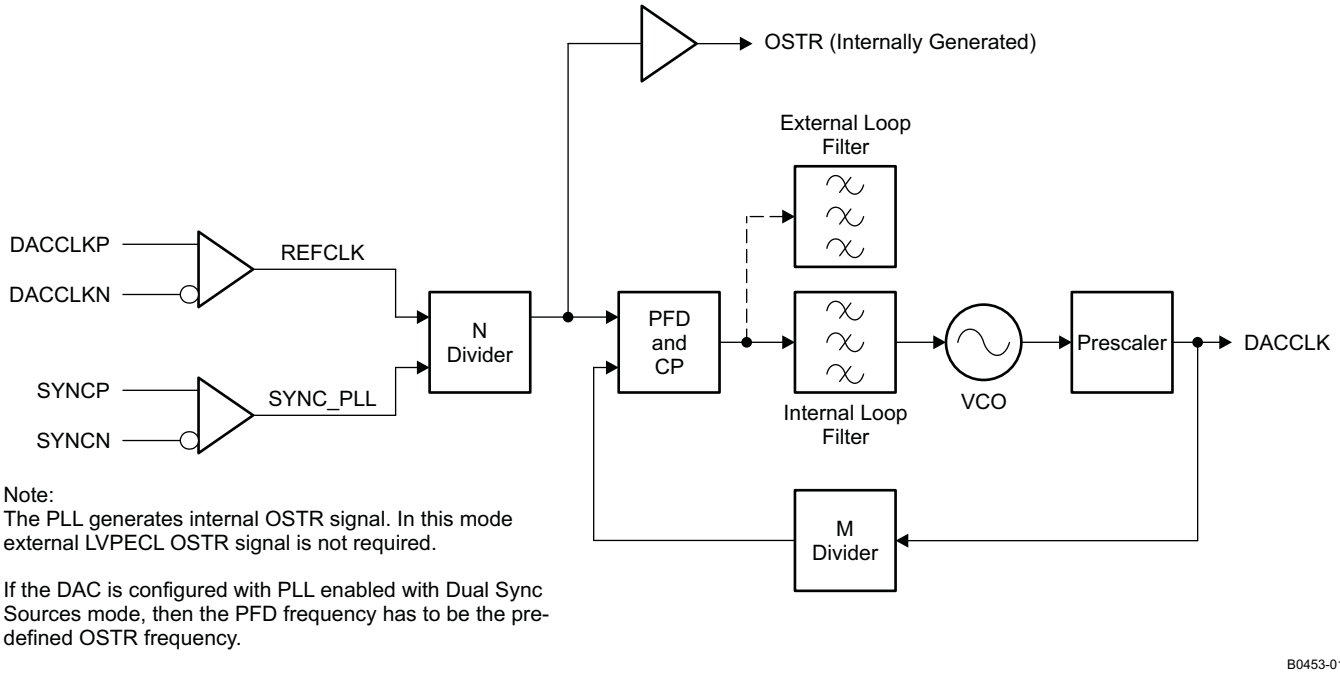

Figure 55. PLL Block Diagram

The DAC34H84 PLL mode is selected by setting the following:

1. *pll_ena* bit in register *config24* to 1b to route to the PLL clock path.
2. *pll_sleep* bit in register *config26* to 0b to enable the PLL and VCO.

Copyright © 2011–2015, Texas Instruments Incorporated

The output frequency of the VCO is designed to be the in the range from 3.3 GHz to 4.0 GHz. The prescaler value, pll_p(2:0) in register config24, should be chosen such that the product of the prescaler value and DAC sample rate clock is within the VCO range. To maintain optimal PLL loop, the coarse tune bits, pll_vco(5:0) in register config26, can adjust the center frequency of the VCO towards the product of the prescaler value and DAC sample rate clock. Figure 56 shows a typical relationship between coarse tune bits and VCO center frequency.

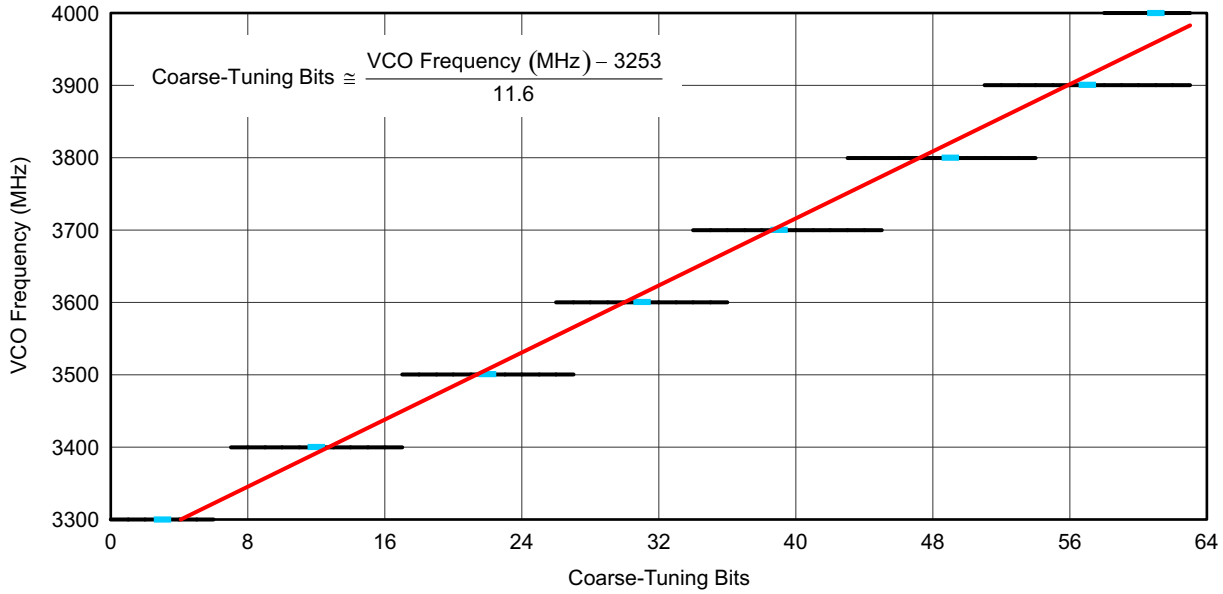

Figure 56. Typical PLL/VCO Lock Range vs Coarse Tuning Bits

Common wireless infrastructure frequencies (614.4 MHz, 737.28 MHz, 983.04 MHz, ...) are generated from this VCO frequency in conjunction with the pre-scaler setting as shown in Table 4.

Table 4. VCO Operation

VCO FREQUENCY (MHz)	PRE-SCALE DIVIDER	DESIRED DACCLK (MHz)	pll_p(2:0)
3932.16	8	491.52	111
3686.4	6	614.4	110
3686.4	5	737.28	101
3932.16	4	983.04	100

The M divider is used to determine the phase-frequency-detector (PFD) and charge-pump (CP) frequency.

Table 5. PFD and CP Operation

DACCLK FREQUENCY (MHz)	M DIVIDER	PDF UPDATE RATE (MHz)	pll_m(7:0)
491.52	4	122.88	00000100
491.52	8	61.44	00001000
491.52	16	30.72	00010000
491.52	32	15.36	00100000

The N divider in the loop allows the PFD to operate at a lower frequency than the reference clock. Both M and N dividers can keep the PFD frequency below 155 MHz for peak operation.

The overall divide ratio inside the loop is the product of the Pre-Scale and M dividers (P × M) and the following guidelines should be followed:

- The overall divide ratio range is from 24 to 480
- When the overall divide ratio is less than 120, the internal loop filter can assure a stable loop

Copyright © 2011–2015, Texas Instruments Incorporated

- When the overall divide ratio is greater than 120, an external loop filter is required to ensure loop stability

The single charge pump current option is selected by setting *pll_cp(1:0)* in register *config24* to 01b. If an external filter is required, the following filter should be connected to the LPF pin (A1):

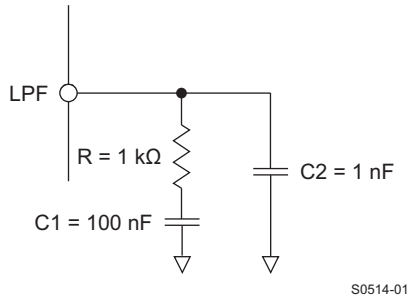

Figure 57. Recommended External Loop Filter

The PLL will generate an internal OSTR signal and does not require the external LVPECL OSTR signal. The OSTR signal is buffered from the N-divider output in the PLL block, and the frequency of the signal is the same as the PFD frequency. Therefore, using PLL with Dual Sync Sources mode would require the PFD frequency to be the pre-defined OSTR frequency. This will allow the FIFO to be synced correctly by the internal OSTR.

7.3.7 FIR Filters

Figure 58 through Figure 61 show the magnitude spectrum response for the FIR0, FIR1, FIR2 and FIR3 interpolating filters where f_{IN} is the input data rate to the FIR filter. Figure 62 to Figure 65 show the composite filter response for 2x, 4x, 8x and 16x interpolation. The transition band for all interpolation settings is from 0.4 to 0.6 x f_{DATA} (the input data rate to the device) with < 0.001dB of pass-band ripple and > 90 dB stop-band attenuation.

The DAC34H84 also has a 9-tap inverse sinc filter (FIR4) that runs at the DAC update rate (f_{DAC}) that can be used to flatten the frequency response of the sample-and-hold output. The DAC sample-and-hold output sets the output current and holds it constant for one DAC clock cycle until the next sample, resulting in the well-known sin(x)/x or sinc(x) frequency response (Figure 66, red line). The inverse sinc filter response (Figure 66, blue line) has the opposite frequency response from 0 to 0.4 x Fdac, resulting in the combined response (Figure 66, green line). Between 0 to 0.4 x f_{DAC}, the inverse sinc filter compensates the sample-and-hold roll-off with less than 0.03 dB error.

The inverse sinc filter has a gain > 1 at all frequencies. Therefore, the signal input to FIR4 must be reduced from full scale to prevent saturation in the filter. The amount of back-off required depends on the signal frequency, and is set such that at the signal frequencies the combination of the input signal and filter response is less than 1 (0 dB). For example, if the signal input to FIR4 is at 0.25 x f_{DAC}, the response of FIR4 is 0.9 dB, and the signal must be backed off from full scale by 0.9 dB to avoid saturation. The gain function in the QMC blocks can be used to reduce the amplitude of the input signal. The advantage of FIR4 having a positive gain at all frequencies is that the user is then able to optimize the back-off of the signal based on its frequency.

The filter taps for all digital filters are listed in Table 3. Note that the loss of signal amplitude may result in lower SNR due to decrease in signal amplitude.

Copyright © 2011–2015, Texas Instruments Incorporated

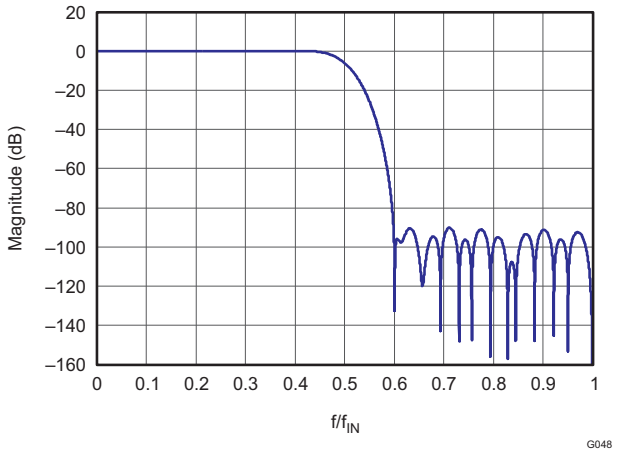

Figure 58. Magnitude Spectrum for FIR0

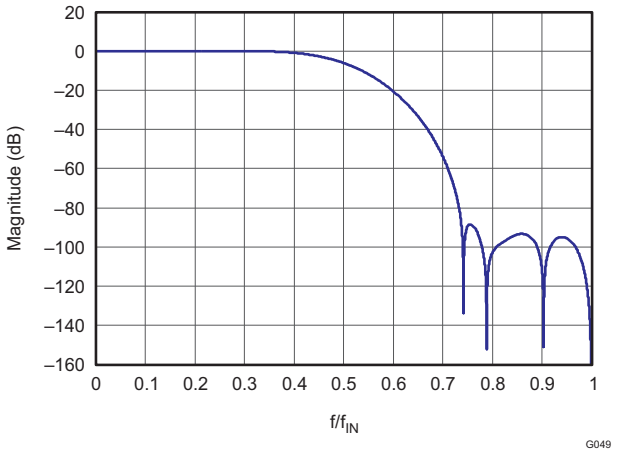

Figure 59. Magnitude Spectrum for FIR1

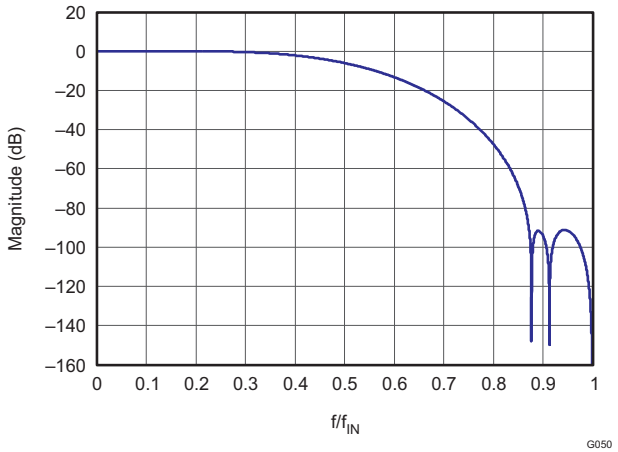

Figure 60. Magnitude Spectrum for FIR2

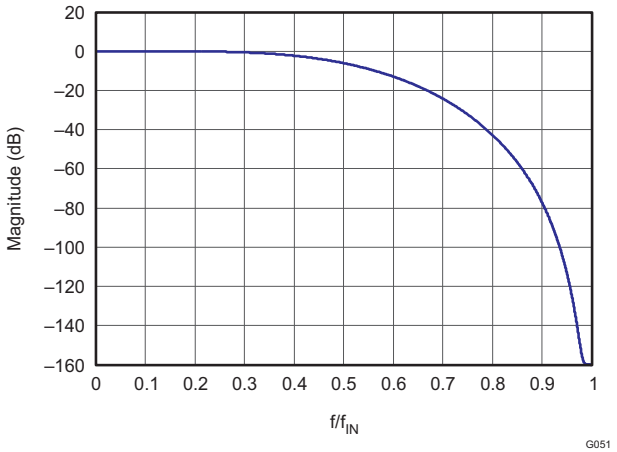

Figure 61. Magnitude Spectrum for FIR3

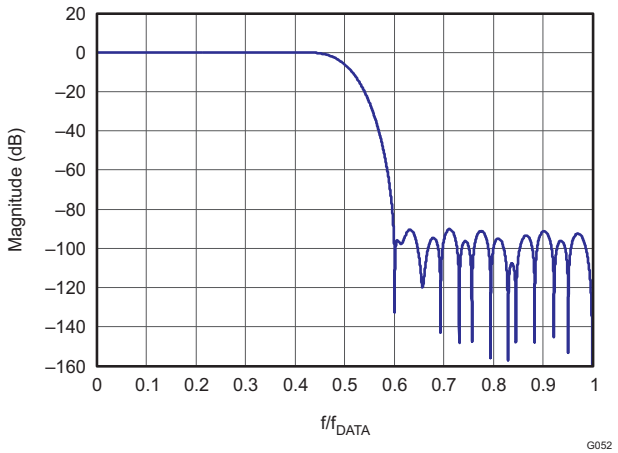

Figure 62. 2x Interpolation Composite Response

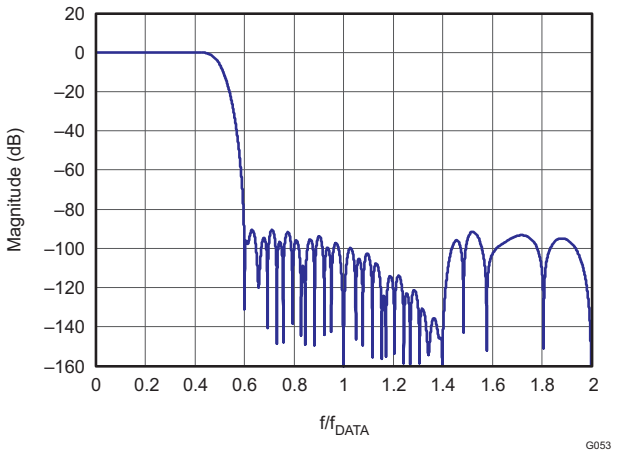

Figure 63. 4x Interpolation Composite Response

Copyright © 2011–2015, Texas Instruments Incorporated

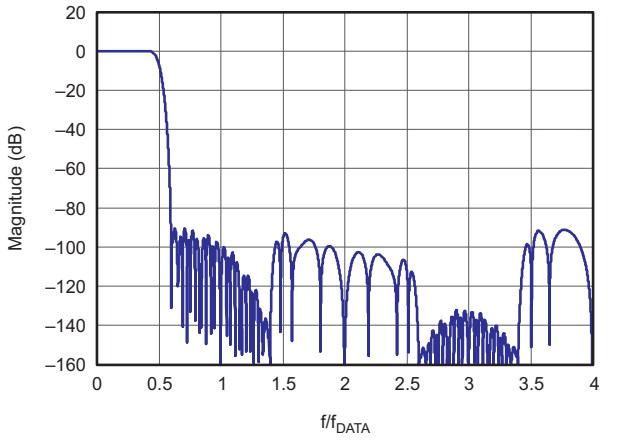

Figure 64. 8x Interpolation Composite Response

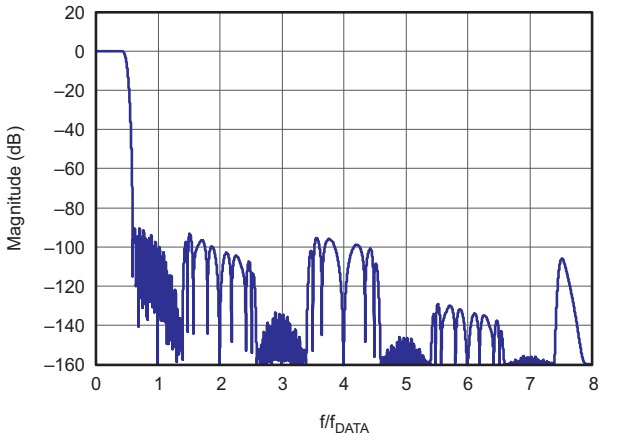

Figure 65. 16x Interpolation Composite Response

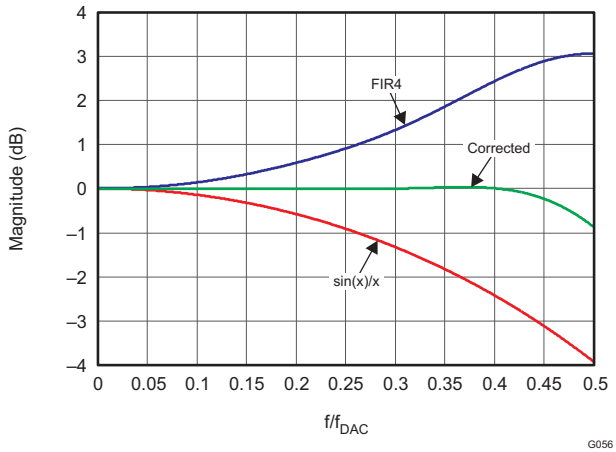

Figure 66. Magnitude Spectrum for Inverse Sinc Filter

Copyright © 2011–2015, Texas Instruments Incorporated

Table 6. FIR Filter Coefficients

INTERPOLATING HALF-BAND FILTERS								NON-INTERPOLATING INVERSE-SINC FILTER	
FIR0		FIR1		FIR2		FIR3		FIR4	
59 TAPS		23 TAPS		11 TAPS		11 TAPS		9 TAPS	
6	6	-12	-12	29	29	3	3	1	1
0	0	0	0	0	0	0	0	-4	-4
-19	-19	84	84	-214	-214	-25	-25	13	13
0	0	0	0	0	0	0	0	-50	-50
47	47	-336	-336	1209	1209	150	150	**592**(1)	
0	0	0	0	**2048**(1)		**256**(1)			
-100	-100	1006	1006						
0	0	0	0						
192	192	-2691	-2691						
0	0	0	0						
-342	-342	10141	10141						
0	0	**16384**(1)							
572	572								
0	0								
-914	-914								
0	0								
1409	1409								
0	0								
-2119	-2119								
0	0								
3152	3152								
0	0								
-4729	-4729								
0	0								
7420	7420								
0	0								
-13334	-13334								
0	0								
41527	41527								
65536(1)									

(1) Center taps are highlighted in BOLD

7.3.8 Complex Signal Mixer

The DAC34H84 has two paths of complex signal mixer blocks that contain two full complex mixer (FMIX) blocks and power saving coarse mixer (CMIX) blocks. The signal path is shown in Figure 67.

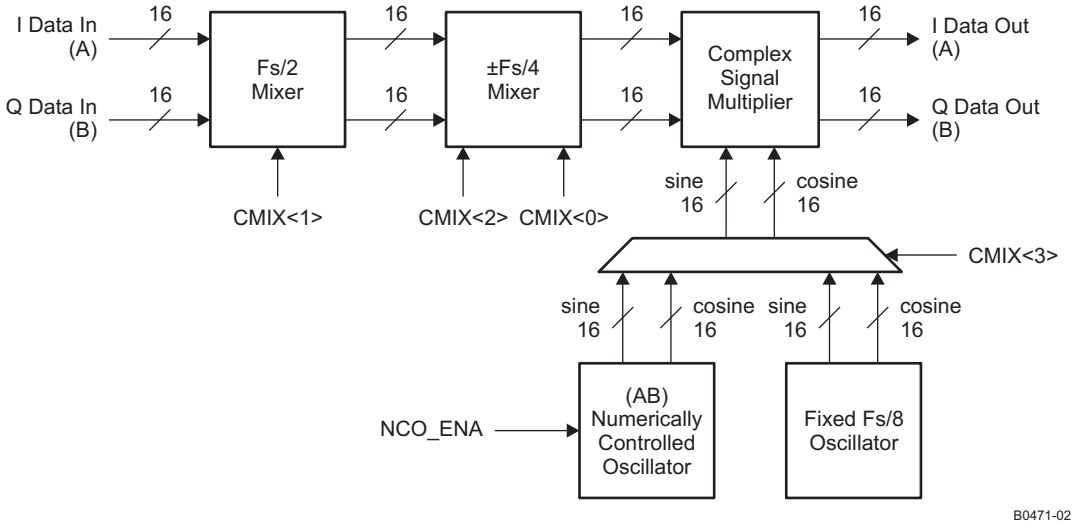

Note: Channel CD data path not shown

Figure 67. Path of Complex Signal Mixer

7.3.8.1 Full Complex Mixer

The two FMIX blocks operate with independent Numerically Controlled Oscillators (NCOs) and enable flexible frequency placement without imposing additional limitations in the signal bandwidth. The NCOs have 32-bit frequency registers *(phaseaddAB(31:0)* and *phaseaddCD(31:0))* and 16-bit phase registers *(phaseoffsetAB(15:0)* and *phaseoffsetCD(15:0))* that generate the sine and cosine terms for the complex mixing. The NCO block diagram is shown in Figure 68.

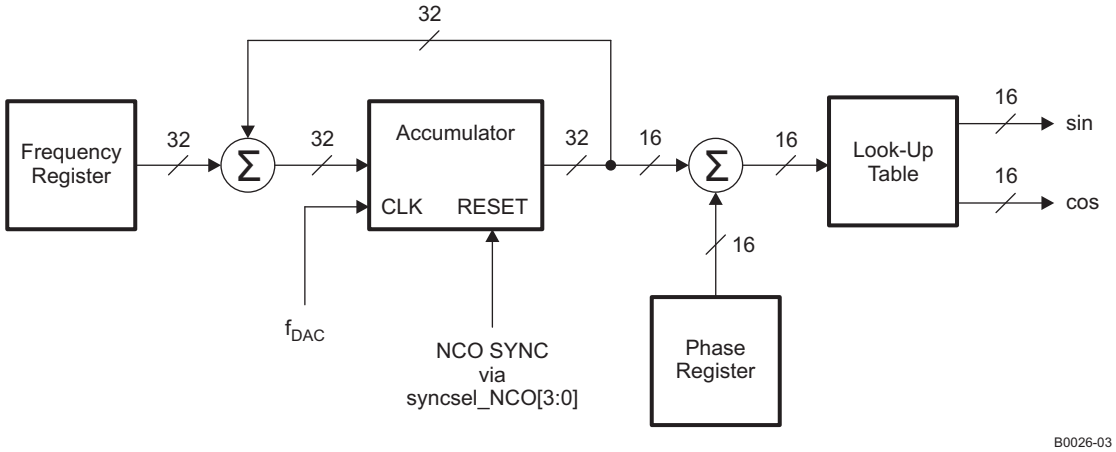

Figure 68. NCO Block Diagram

Synchronization of the NCOs occurs by resetting the NCO accumulators to zero. The synchronization source is selected by *syncsel_NCO(3:0)* in *config31*. The frequency word in the *phaseaddAB(31:0)* and *phaseaddCD(31:0)* registers is added to the accumulators every clock cycle, f_{DAC}. The output frequency of the NCO is:

$$f_{NCO} = \frac{freq \times f_{NCO_CLK}}{2^{32}} \quad (1)$$

Copyright © 2011–2015, Texas Instruments Incorporated

With the complex mixer enabled, the two channels in the mixer path are treated as complex vectors of the form $I_{IN}(t) + j\ Q_{IN}(t)$. The complex signal multiplier (shown in Figure 69) will multiply the complex channels with the sine and cosine terms generated by the NCO. The resulting output, $I_{OUT}(t) + j\ Q_{OUT}(t)$, of the complex signal multiplier is:

$$I_{OUT}(t) = (I_{IN}(t)\cos(2\pi f_{NCO}t + \delta) - Q_{IN}(t)\sin(2\pi f_{NCO}t + \delta)) \times 2^{(mixer_gain\ -\ 1)}$$
$$Q_{OUT}(t) = (I_{IN}(t)\sin(2\pi f_{NCO}t + \delta) + Q_{IN}(t)\cos(2\pi f_{NCO}t + \delta)) \times 2^{(mixer_gain\ -\ 1)}$$

where t is the time since the last resetting of the NCO accumulator, δ is the phase offset value and *mixer_gain* is either 0 or 1. δ is given by:

$$\delta = 2\pi \times phase_offsetAB/CD(15:0)/2^{16}$$

The *mixer_gain* option allows the output signals of the multiplier to reduce by half (6dB). See *Mixer Gain* section for details.

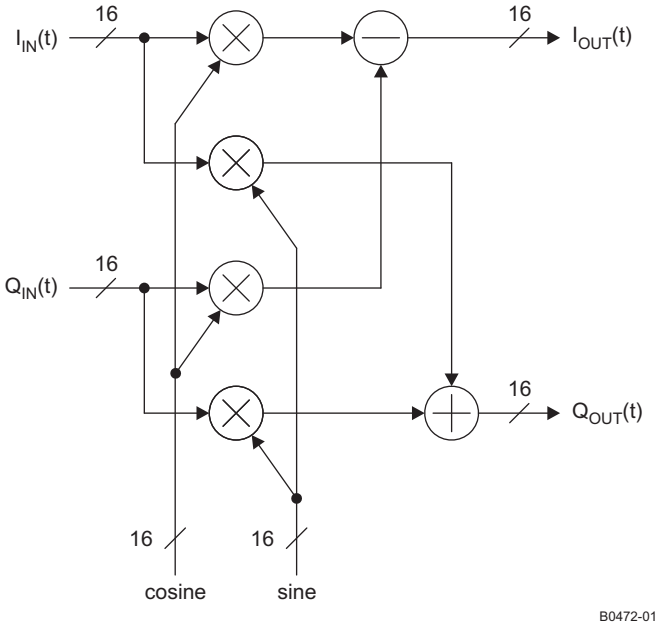

Figure 69. Complex Signal Multiplier

7.3.8.2 Coarse Complex Mixer

In addition to the full complex mixers, the DAC34H84 also has coarse mixer blocks capable of shifting the input signal spectrum by the fixed mixing frequencies $\pm n \times f_S/8$. Utilizing the coarse mixer instead of the full mixers lowers power consumption.

The output of the fs/2, fs/4, and –fs/4 mixer block is:

$$I_{OUT}(t) = I(t)\cos(2\pi f_{CMIX}t) - Q(t)\sin(2\pi f_{CMIX}t)$$
$$Q_{OUT}(t) = I(t)\sin(2\pi f_{CMIX}t) + Q(t)\cos(2\pi f_{CMIX}t)$$

Since the sine and the cosine terms are a function of fs/2, fs/4, or –fs/4 mixing frequencies, the possible resulting value of the terms will only be 1, -1, or 0. The simplified mathematics allows the complex signal multiplier to be bypassed in any one of the modes, thus mixer gain is not available. The fs/2, fs/4, and –fs/4 mixer blocks performs mixing through negating and swapping of I/Q channel on certain sequence of samples. Table 7 shows the algorithm used for those mixer blocks.

Table 7. Fs/2, Fs/4, and –Fs/4 Mixing Sequence

MODE	MIXING SEQUENCE
Normal (mixer bypassed)	Iout = {+I1, +I2, +I3, +I4…}
	Qout = {+Q1, +Q2, +Q3, +Q4…}

Copyright © 2011–2015, Texas Instruments Incorporated

Table 7. Fs/2, Fs/4, and –Fs/4 Mixing Sequence (continued)

MODE	MIXING SEQUENCE
fs/2	Iout = {+I1, -I2, +I3, -I4…}
	Qout = {+Q1, -Q2, +Q3, -Q4…}
fs/4	Iout = {+I1, -Q2, -I3, +Q4…}
	Qout = {+Q1, +I2, -Q3, -I4…}
-fs/4	Iout = {+I1, +Q2, -I3, -Q4…}
	Qout = {+Q1, -I2, -Q3, +I4…}

The fs/8 mixer can be enabled along with various combinations of fs/2, fs/4, and –fs/4 mixer. Since the fs/8 mixer uses the complex signal multiplier block with fixed fs/8 sine and cosine term, the output of the multiplier is:

$$I_{OUT}(t) = (I_{IN}(t)\cos(2\pi f_{NCO}t + \delta) - Q_{IN}(t)\sin(2\pi f_{NCO}t + \delta)) \times 2^{(\text{mixer_gain} - 1)}$$
$$Q_{OUT}(t) = (I_{IN}(t)\sin(2\pi f_{NCO}t + \delta) + Q_{IN}(t)\cos(2\pi f_{NCO}t + \delta)) \times 2^{(\text{mixer_gain} - 1)}$$

where f_{CMIX} is the fixed mixing frequency selected by *cmix(3:0)*. The mixing combinations are described in Table 8. The *mixer_gain* option allows the output signals of the multiplier to reduce by half (6dB). See *Mixer Gain* section for details.

Table 8. Coarse Mixer Combinations

cmix(3:0)	Fs/8 MIXER cmix(3)	Fs/4 MIXER cmix(2)	Fs/2 MIXER cmix(1)	–Fs/4 MIXER cmix(0)	MIXING MODE
0000	Disabled	Disabled	Disabled	Disabled	No mixing
0001	Disabled	Disabled	Disabled	Enabled	–Fs/4
0010	Disabled	Disabled	Enabled	Disabled	Fs/2
0100	Disabled	Enabled	Disabled	Disabled	+Fs/4
1000	Enabled	Disabled	Disabled	Disabled	+Fs/8
1010	Enabled	Disabled	Enabled	Disabled	–3Fs/8
1100	Enabled	Enabled	Disabled	Disabled	+3Fs/8
1110	Enabled	Enabled	Enabled	Disabled	–Fs/8
All others	–	–	–	–	Not recommended

7.3.8.3 Mixer Gain

The maximum output amplitude out of the complex signal multiplier (i.e., FMIX mode or CMIX mode with fs/8 mixer enabled) occurs if $I_{IN}(t)$ and $Q_{IN}(t)$ are simultaneously full scale amplitude and the sine and cosine arguments are equal to $2\pi \times f_{MIX}t + \delta$ (2N-1) x π/4, where N = 1, 2, 3, ...

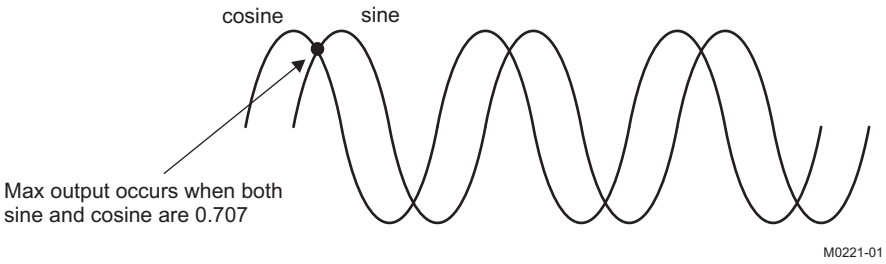

Figure 70. Maximum Output of the Complex Signal Multiplier

With *mixer_gain* = 1 and both $I_{IN}(t)$ and $Q_{IN}(t)$ are simultaneously full scale amplitude, the maximum output possible out of the complex signal multiplier is 0.707 + 0.707 = 1.414 (or 3dB). This configuration can cause clipping of the signal and should therefore be used with caution.

With *mixer_gain* = 0 in *config2*, the maximum output possible out of the complex signal multiplier is 0.5 x (0.707 + 0.707) = 0.707 (or -3dB). This loss in signal power is in most cases undesirable, and it is recommended that the gain function of the QMC block be used to increase the signal by 3 dB to compensate.

Copyright © 2011–2015, Texas Instruments Incorporated

7.3.8.4 Real Channel Upconversion

The mixer in the DAC34H84 treats the A, B, C, and D inputs are complex input data and produces a complex output for most mixing frequencies. The real input data for each channel can be isolated only when the mixing frequency is set to normal mode or fs/2 mode. Refer to Table 7 for details.

7.3.9 Quadrature Modulation Correction (QMC)

7.3.9.1 Gain and Phase Correction

The DAC34H84 includes a Quadrature Modulator Correction (QMC) block. The QMC blocks provide a mean for changing the gain and phase of the complex signals to compensate for any I and Q imbalances present in an analog quadrature modulator. The block diagram for the QMC block is shown in Figure 71. The QMC block contains 3 programmable parameters.

Registers *qmc_gainA/B(10:0)* and *qmc_gainC/D(10:0)* controls the I and Q path gains and is an 11-bit unsigned value with a range of 0 to 1.9990 and the default gain is 1.0000. The implied decimal point for the multiplication is between bit 9 and bit 10.

Register *qmc_phaseAB/CD(11:0)* control the phase imbalance between I and Q and are a 12-bit values with a range of –0.5 to approximately 0.49975. The QMC phase term is not a direct phase rotation but a constant that is multiplied by each "Q" sample then summed into the "I" sample path. This is an approximation of a true phase rotation in order to keep the implementation simple.

LO feed-through can be minimized by adjusting the DAC offset feature described below.

Copyright © 2011–2015, Texas Instruments Incorporated

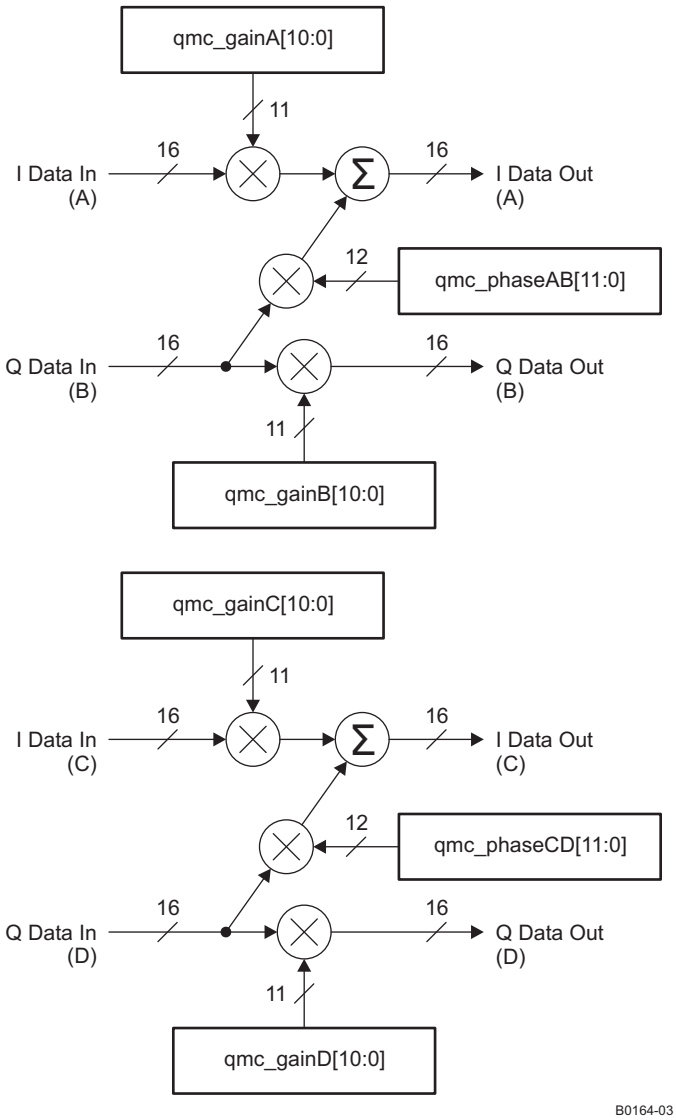

Figure 71. QMC Block Diagram

7.3.9.2 Offset Correction

Registers *qmc_offsetA(12:0), qmc_offsetB(12:0), qmc_offsetC(12:0)* and *qmc_offsetD(12:0)* can be used to independently adjust the DC offsets of each channel. The offset values are in represented in 2s-complement format with a range from –4096 to 4095.

The offset value adds a digital offset to the digital data before digital-to-analog conversion. Since the offset is added directly to the data it may be necessary to back off the signal to prevent saturation. Both data and offset values are LSB aligned.

Copyright © 2011–2015, Texas Instruments Incorporated

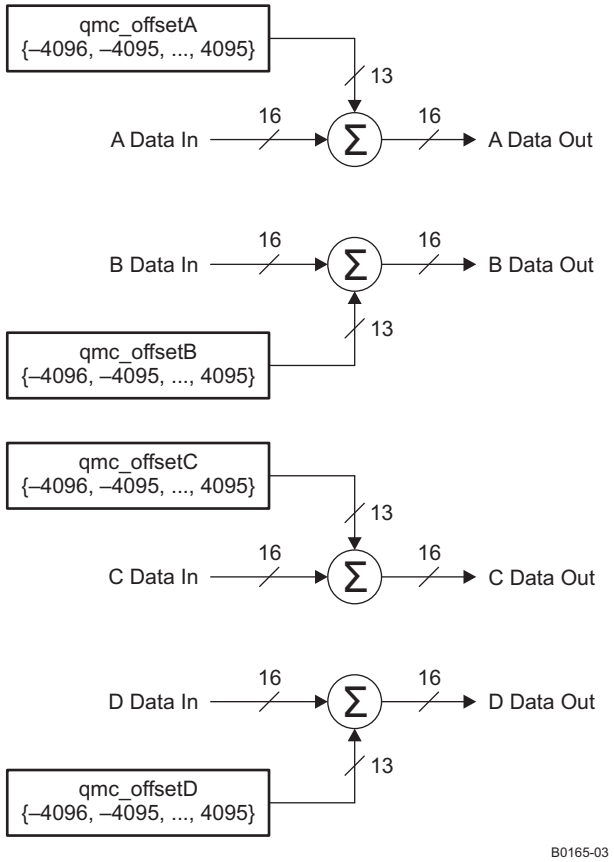

Figure 72. Digital Offset Block Diagram

7.3.9.3 Group Delay Correction

A complex transmitter system typically is consisted of a DAC, reconstruction filter network, and I/Q modulator. Besides the gain and phase mismatch contribution, there could also be timing mismatch contribution from each components. For instance, the timing mismatch could come from the PCB trace length variation between the I and Q channels and the group delay variation from the reconstruction filter.

This timing mismatch in the complex transmitter system creates phase mismatch that varies linearly with respect to frequency. To compensate for the I/Q imbalances due to this mismatch, the DAC34H84 has group delay correction block for each DAC channel. Each DAC channel can adjust its delay through *grp_delayA(7:0) grp_delayB(7:0) grp_delayC(7:0)* and *grp_delayD(7:0)* in register *config46* and *config47*. The maximum delay ranges from 30 ps to 100 ps and is dependent on DAC sample clock. Contact TI for specific application information. Refer to the Group Delay vs Step Code plots in the Typical Characteristics section. The group delay correction, along with gain/phase correction, can be useful for correcting imbalances in wide-band transmitter system.

7.3.10 Temperature Sensor

The DAC34H84 incorporates a temperature sensor block which monitors the temperature by measuring the voltage across 2 transistors. The voltage is converted to an 8-bit digital word using a successive-approximation (SAR) analog to digital conversion process. The result is scaled, limited and formatted as a 2s-complement value representing the temperature in degrees Celsius.

Copyright © 2011–2015, Texas Instruments Incorporated

The sampling is controlled by the serial interface signals SDENB and SCLK. If the temperature sensor is enabled (*tsense_sleep* = 0b in register *config26*) a conversion takes place each time the serial port is written or read. The data is only read and sent out by the digital block when the temperature sensor is read in *tempdata(7:0)* in *config6*. The conversion uses the first eight clocks of the serial clock as the capture and conversion clock, the data is valid on the falling eighth SCLK. The data is then clocked out of the chip on the rising edge of the ninth SCLK. No other clocks to the chip are necessary for the temperature sensor operation. As a result the temperature sensor is enabled even when the device is in sleep mode.

In order for the process described above to operate properly, the serial port read from *config6* must be done with an SCLK period of at least 1 µs. If this is not satisfied the temperature sensor accuracy is greatly reduced.

7.3.11 Data Pattern Checker

The DAC34H84 incorporates a simple pattern checker test in order to determine errors in the data interface. The main cause of failures is setup/hold timing issues. The test mode is enabled by asserting *iotest_ena* in register *config1*. In test mode the analog outputs are deactivated regardless of the state of TXENA or *sif_texnable* in register *config3.*

The data pattern key used for the test is 8 words long and is specified by the contents of *iotest_pattern[0:7]* in registers *config37* through *config44*. The data pattern key can be modified by changing the contents of these registers.

The first word in the test frame is determined by a rising edge transition in ISTR or SYNC, depending on the *syncsel_fifoin(3:0)* setting in *config32*. At this transition, the *pattern0* word should be input to the data DAB[15:0] pins, and *pattern2* should be input to the data DCD[15:0] pins. Patterns 1, 4, and 5 of DAB[15:0] bus and pattern 3, 6, and 7 of DCD[15:0] bus should follow sequentially on each edge of DATACLK (rising and falling). The sequence should be repeated until the pattern checker test is disabled by setting *iotest_ena* back to 0b. It is not necessary to have a rising ISTR or SYNC edge aligned with every four DATACLK cycle, just the first one to mark the beginning of the series.

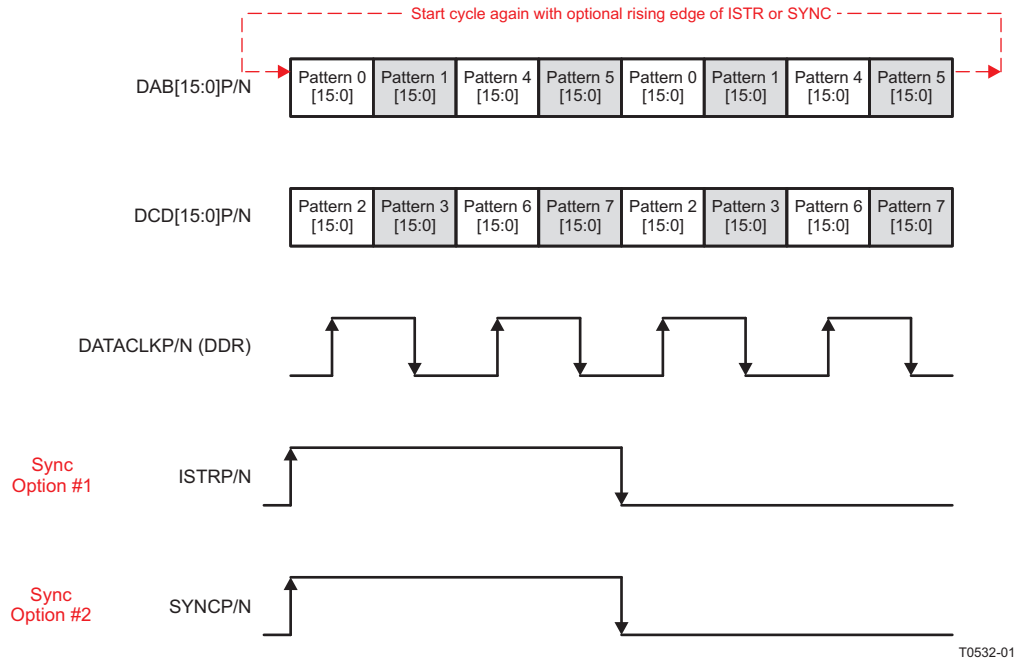

Figure 73. IO Pattern Checker Data Transmission Format

Copyright © 2011–2015, Texas Instruments Incorporated

The test mode determines if the all the patterns on the two 16-bit LVDS data buses (DAB[15:0]P/N and DCD[15:0]P/N) were received correctly by comparing the received data against the data pattern key. If any bits in either of the two 16-bit data buses were received incorrectly, the corresponding bits in *iotest_results(15:0)* in register *config4* will be set to 1b to indicate bit error location. The user can check the corresponding bit location on both 16-bit data buses and implement the fix accordingly. Furthermore, the error condition will trigger the *alarm_from_iotest* bit in register *config5* to indicate a general error in the data interface. When data pattern checker mode is enabled, this alarm in register config5, bit7 is the only valid alarm. Other alarms in register config5 are not valid and can be disregarded.

For instance, *pattern0* is programmed to the default of 0x7A7A. If the received Pattern 0 is 0x7A7B, then bit 0 in *iotest_results(15:0)* will be set to 1b to indicate an error in bit 0 location. The *alarm_from_iotest* will also be set to 1b to report the data transfer error. Note that *iotest_results(15:0)* does not indicate which of the 16-bit buses has the error. The user needs to check both 16-bit buses and then narrow down the error from the bit location information.

The alarms can be cleared by writing 0x0000 to *iotest_results(15:0)* and 0b to *alarm_from_iotest* through the serial interface. The serial interface will read back 0s if there are no errors or if the errors are cleared. The corresponding alarm bit will remain a 1b if the errors remain.

It is recommended to enable the pattern checker and then run the pattern sequence for 100 or more complete cycles before clearing the *iotest_results(15:0)* and *alarm_from_iotest*. This will eliminate the possibility of false alarms generated during the setup sequence.

Copyright © 2011–2015, Texas Instruments Incorporated

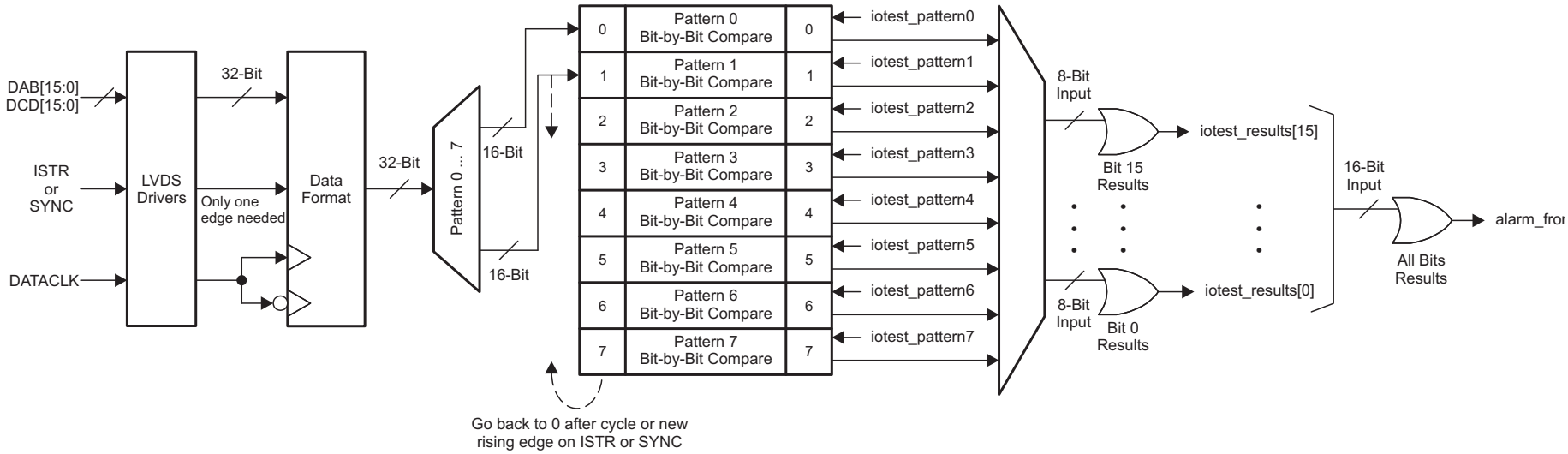

Figure 74. DAC34H84 Pattern Check Block Diagram

Copyright © 2011–2015, Texas Instruments Incorporated

7.3.12 Parity Check Test

The DAC34H84 has a parity check test that enables continuous validity monitoring of the data received by the DAC. Parity check testing in combination with the data pattern checker offer an excellent solution for detecting board assembly issues due to missing pad connections.

For the parity check test, an extra parity bit is added to the data bits to ensure that the total number of set bits (bits with value 1b) is even or odd. This simple scheme is used to detect single or any other odd number of data transfer errors. Parity testing is implemented in the DAC34H84 in two ways: 32-bit parity and dual 16-bit parity.

7.3.12.1 32-Bit Parity

In the 32-bit mode the additional parity bit is sourced to the parity input (PARITYP/N) for the 32-bit data transfer into the DAB[15:0]P/N and DCD[15:0]P/N inputs. This mode is enabled by setting the *single_parity_ena* bit in register *config1*. The input parity value is defined to be the total number of logic 1s on the 33-bit data bus – the DAB[15:0]P/N inputs, the DCD[15:0]P/N inputs, and the PARITYP/N input. This value, the total number of logic 1s, must match the parity test selected in the *oddeven_parity* bit in register *config1*.

For example, if the oddeven_parity bit is set to 1b for odd parity, then the number of 1s on the 33-bit data bus should be odd. The DAC will check the data transfer through the parity input. If the data received has odd number of 1s, then the parity is correct. If the data received has even number of 1s, then the parity is incorrect. The corresponding alarm for parity error will be set accordingly.

Figure 75 shows the simple XOR structure used to check word parity. Parity is tested independently for data captured on both rising and falling edges of DATACLK (*alarm_Aparity* and *alarm_Bparity*, respectively). Testing on both edges helps in determining a possible setup/hold issue. Both alarms are captured individually in register *config5*.

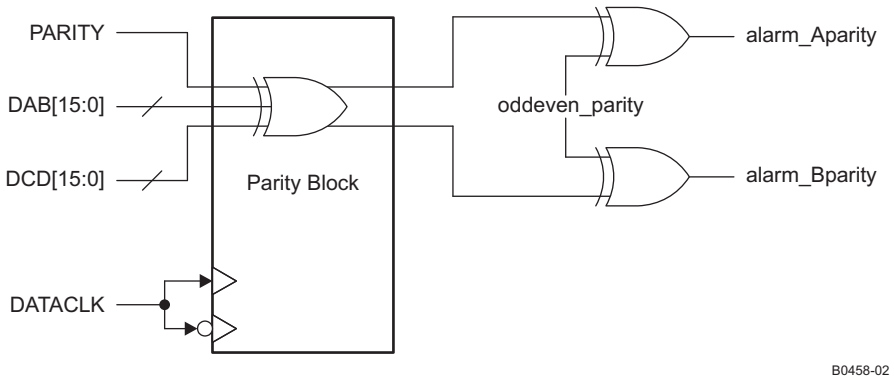

Figure 75. DAC34H84 32-Bit Parity Check

7.3.12.2 Dual 16-Bit Parity

In the dual 16-bit mode, each 16-bit LVDS data bus input will be accompanied by a parity bit for error checking. The DAB[15:0]P/N and ISTRP/N are one 17-bit data path, and the DCD[15:0]P/N and PARITYP/N are another path. This mode is enabled by setting the *dual_parity_ena* bit in register *config1*. The input parity value is defined to be the total number of logic 1s on each 17-bit data bus. This value, the total number of logic 1s, must match the parity test selected in the *oddeven_parity* bit in register *config1*.

For example, if the oddeven_parity bit is set to 1b for odd parity, then the number of 1s on each 17-bit data bus should be odd. The DAC will check the data transfer through the parity input. If the data received has odd number of 1s, then the parity is correct. If the data received has even number of 1s, then the parity is incorrect. The corresponding alarm for parity error will be set accordingly.

Figure 76 shows the simple XOR structure used to check word parity. Parity is tested independently for data captured on both rising and falling edges of DATACLK for each data path (*alarm_Aparity, alarm_Bparity, alarm_Cparity,* and *alarm_Dparity*, respectively). Testing on both edges and both data buses helps in determining a possible setup/hold issue. All of the alarms are captured individually in register *config5.*

Copyright © 2011–2015, Texas Instruments Incorporated

In this mode the ISTR signal functions as a parity signal and cannot be used to sync the FIFO pointer simultaneously. It is recommended to use the SYNC to sync the FIFO pointer. If ISTR has to be used to sync the FIFO pointer, the ISTR sync can only be possible upon start-up when dual 16-bit parity function is disabled. Once the initialization is finished, disable the FIFO pointer sync through ISTR (by configuring *syncsel_fifoin* and *syncsel_fifoout* in *config32*) and enable the dual 16-bit parity function afterwards.

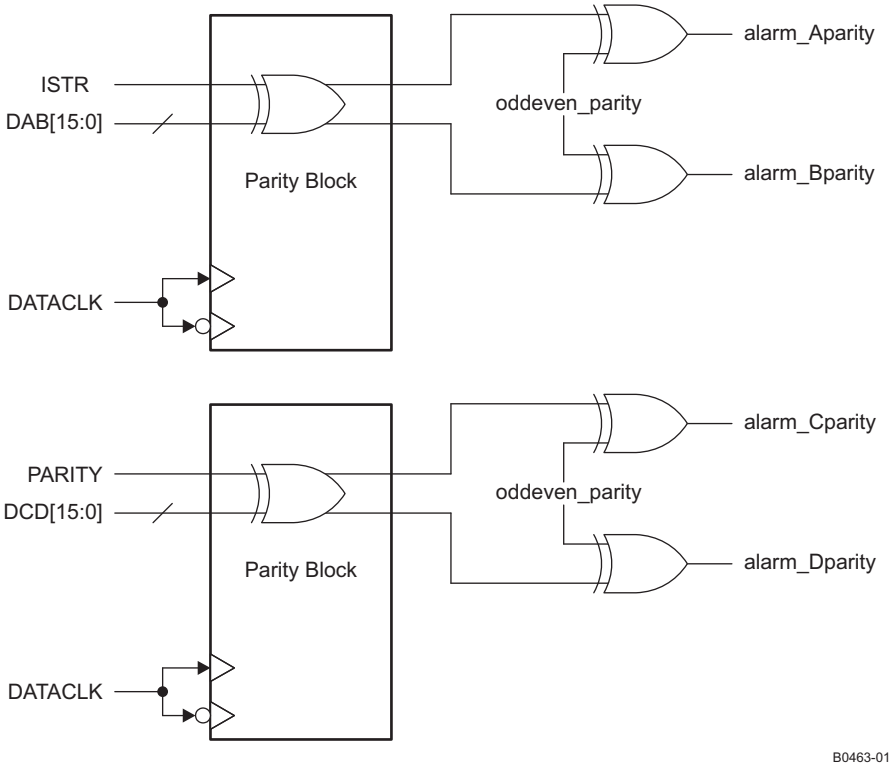

Figure 76. DAC34H84 Dual 16-Bit Parity Check

7.3.13 DAC34H84 Alarm Monitoring

The DAC34H84 includes a flexible set of alarm monitoring that can be used to alert of a possible malfunction scenario. All the alarm events can be accessed either through the *config5* register or through the ALARM pin. Once an alarm is set, the corresponding alarm bit in register *config5* must be reset through the serial interface to allow further testing. The set of alarms includes the following conditions:

Zero check alarm

- Alarm_from_zerochk. Occurs when the FIFO write pointer has an all zeros pattern. Since the write pointer is a shift register, all zeros will cause the input point to be stuck until the next sync event. When this happens a sync to the FIFO block is required.

FIFO alarms

- alarm_from_fifo. Occurs when there is a collision in the FIFO pointers or a collision event is close.
  - alarm_fifo_2away. Pointers are within two addresses of each other.
  - alarm_fifo_1away. Pointers are within one address of each other.
  - alarm_fifo_collision. Pointers are equal to each other.

Clock alarms

- clock_gone. Occurs when either the DACCLK or DATACLOCK have been stopped.
  - alarm_dacclk_gone. Occurs when the DACCLK has been stopped.
  - alarm_dataclk_gone. Occurs when the DATACLK has been stopped.

Pattern checker alarm

- alarm_from_iotest. Occurs when the input data pattern does not match the pattern key.

Copyright © 2011–2015, Texas Instruments Incorporated

PLL alarm

- alarm_from_pll. Occurs when the PLL is out of lock.

Parity alarms

- alarm_Aparity: In dual parity mode, alarm indicating a parity error on the A word. In single parity mode, alarm on the 32-bit data captured on the rising edge of DATACLKP/N.
- alarm_Bparity: In dual parity mode, alarm indicating a parity error on the B word. In single parity mode, alarm on the 32-bit data captured on the falling edge of DATACLKP/N.
- alarm_Cparity: In dual parity mode, alarm indicating a parity error on the C word.
- alarm_Dparity: In dual parity mode, alarm indicating a parity error on the D word.

To prevent unexpected DAC outputs from propagating into the transmit channel chain, the clock and alarm_fifo_collision alarms can be set in *config2* to shut-off the DAC output automatically regardless of the state of TXENA or *sif_txenable*.

Alarm monitoring is implemented as follows:

- Power up the device using the recommended power-up sequence.
- Clear all the alarms in *config5* by setting them to zeros.
- Unmask those alarms that will generate a hardware interrupt through the ALARM pin in *config7.*
- Enable automatic DAC shut-off in register *config2* if required.
- In the case of an alarm event, the ALARM pin will trigger. If automatic DAC shut-off has been enabled the DAC outputs will be disabled.
- Read registers *config5* to determine which alarm triggered the ALARM pin.
- Correct the error condition and re-synchronize the FIFO.
- Clear the alarms in *config5.*
- Re-read *config5* to ensure the alarm event has been corrected.
- Keep clearing and reading *config5* until no error is reported.

Copyright © 2011–2015, Texas Instruments Incorporated

7.3.14 LVPECL Inputs

Figure 77 shows an equivalent circuit for the DAC input clock (DACCLKP/N) and the output strobe clock (OSTRP/N).

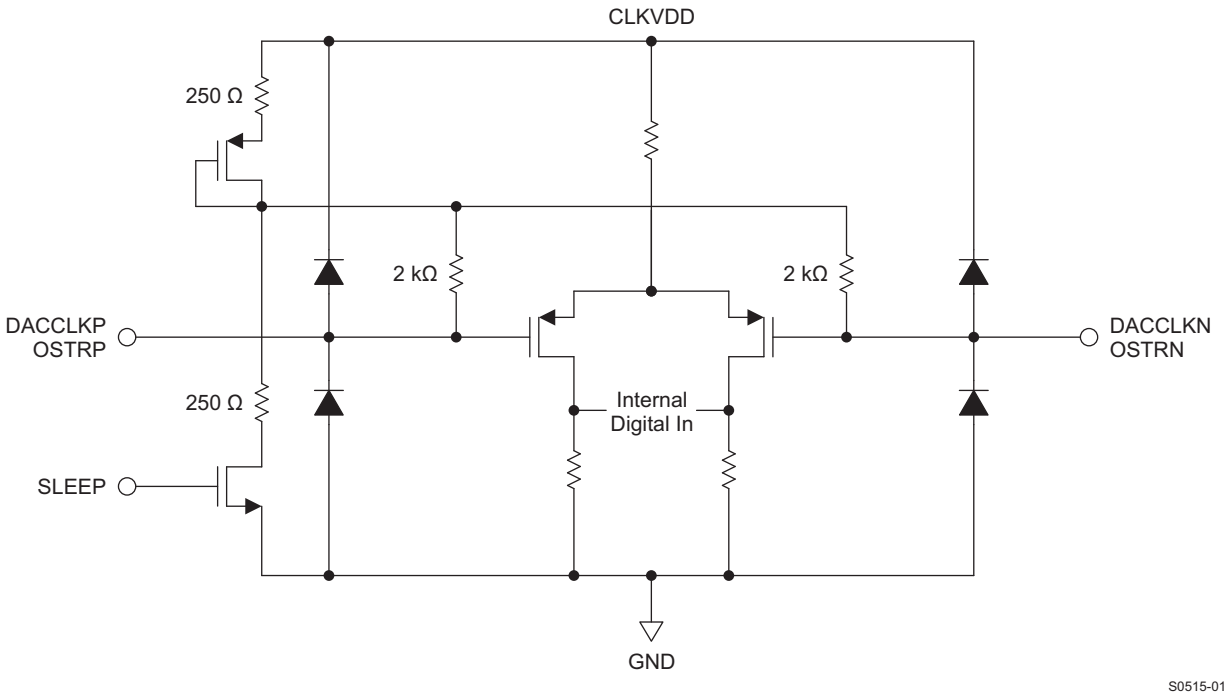

Figure 77. DACCLKP/N and OSTRP/N Equivalent Input Circuit

Figure 78 shows the preferred configuration for driving the CLKIN/CLKINC input clock with a differential ECL/PECL source.

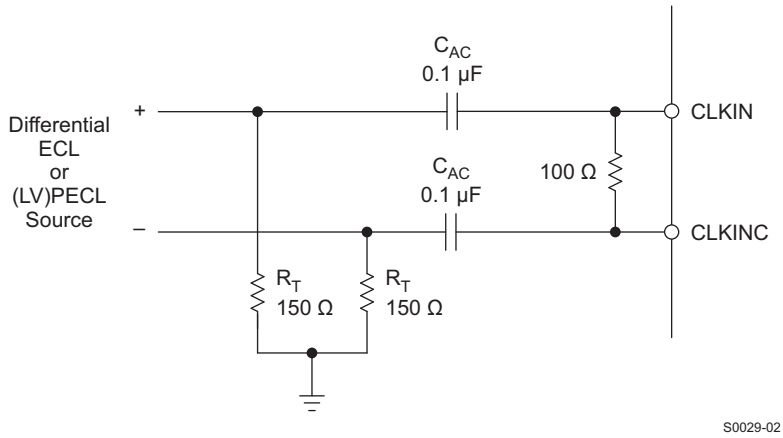

Figure 78. Preferred Clock Input Configuration with a Differential ECL/PECL Clock Source

7.3.15 LVDS Inputs

The DAB[15:0]P/N, DCD[15:0]P/N, DATACLKP/N, SYNCP/N, PARITYP/N, and ISTRP/N LVDS pairs have the input configuration shown in Figure 79. Figure 80 shows the typical input levels and common-move voltage used to drive these inputs.

Copyright © 2011–2015, Texas Instruments Incorporated

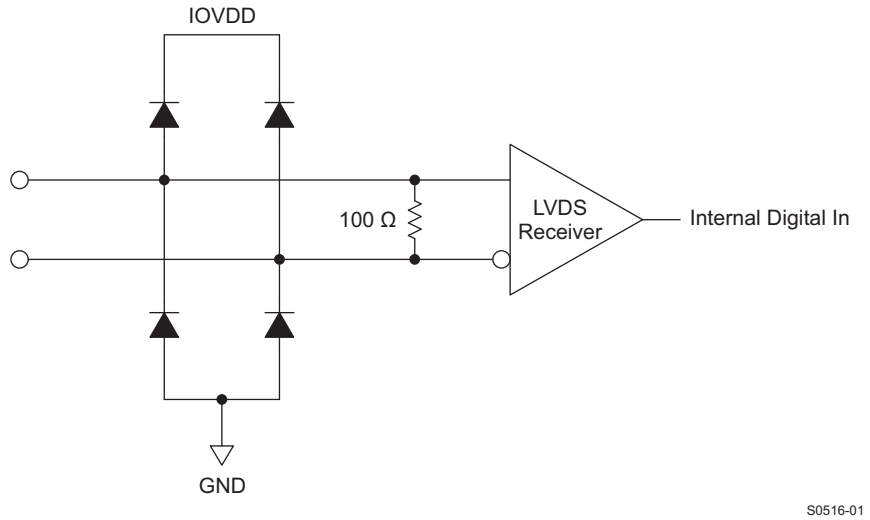

Figure 79. DAB[15:0]P/N, DCD[15:0]P/N, DATACLKP/N, ISTRP/N, SYNCP/N and PARITYP/N LVDS Input Configuration

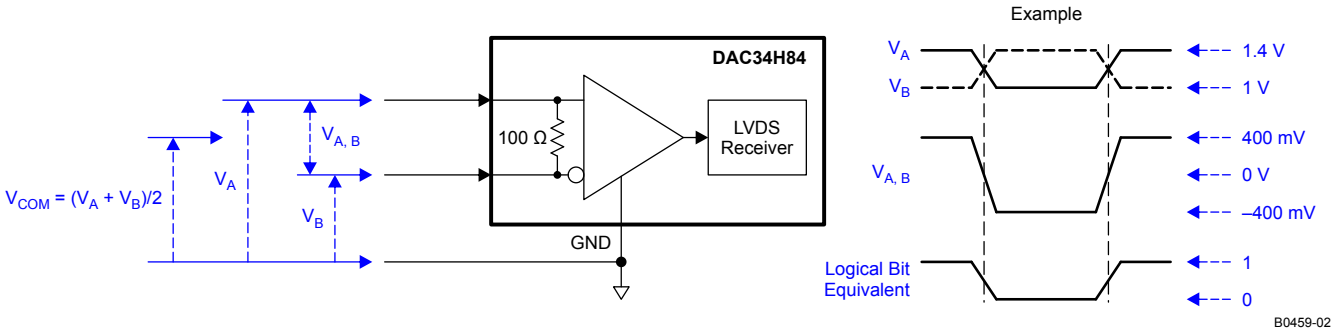

Figure 80. LVDS Data Input Levels

Table 9. Example LVDS Data Input Levels

APPLIED VOLTAGES		RESULTING DIFFERENTIAL VOLTAGE	RESULTING COMMON-MODE VOLTAGE	LOGICAL BIT BINARY EQUIVALENT
V_A	V_B	$V_{A,B}$	V_{COM}	
1.4 V	1.0 V	400 mV	1.2 V	1
1.0 V	1.4 V	-400 mV		0
1.2 V	0.8 V	400 mV	1.0 V	1
0.8 V	1.2 V	-400 mV		0

7.3.16 CMOS Digital Inputs

Figure 81 shows a schematic of the equivalent CMOS digital inputs of the DAC34H84. SDIO, SCLK, SLEEP and TXENA have pull-down resistors while SDENB and RESETB have pull-up resistors internal to the DAC34H84. All the CMOS digital inputs and outputs are referred to the IOVDD2 supply, which can vary from 1.8 V to 3.3 V. This facilitates the I/O interface and eliminates the need of level translation. See the specification table for logic thresholds. The pull-up and pull-down circuitry is approximately equivalent to 100 kΩ.

Copyright © 2011–2015, Texas Instruments Incorporated

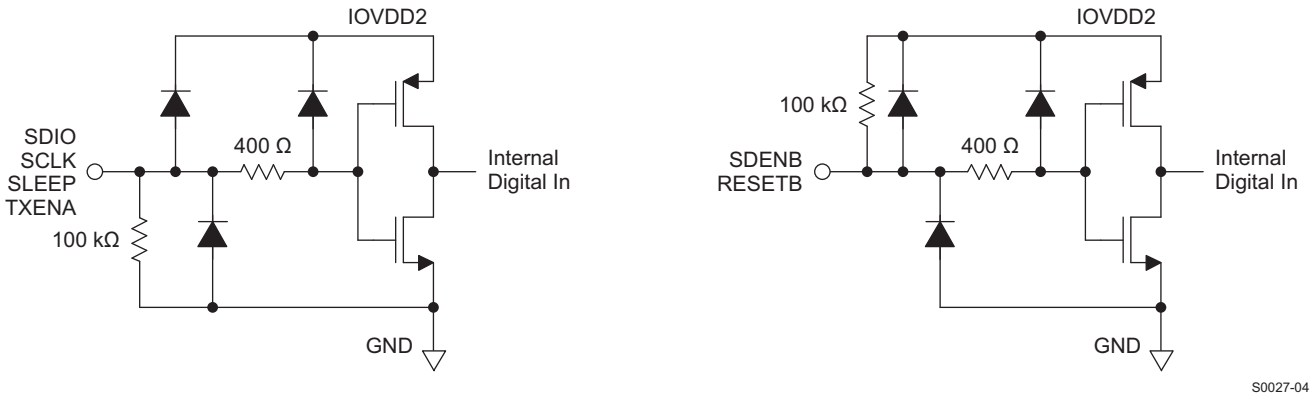

Figure 81. CMOS Digital Equivalent Input

7.3.17 Reference Operation

The DAC34H84 uses a bandgap reference and control amplifier for biasing the full-scale output current. The full-scale output current is set by applying an external resistor R_{BIAS} to pin BIASJ. The bias current I_{BIAS} through resistor R_{BIAS} is defined by the on-chip bandgap reference voltage and control amplifier. The default full-scale output current equals 64 times this bias current and can thus be expressed as:

$$IOUT_{FS} = 64 \times I_{BIAS} = 64 \times (V_{EXTIO} / R_{BIAS}) / 2$$

The DAC34H84 has a 4-bit coarse gain control *coarse_dac(3:0)* in the *config3* register. Using gain control, the $IOUT_{FS}$ can be expressed as:

$$IOUT_{FS} = (coarse_dac + 1)/16 \times I_{BIAS} \times 64 = (coarse_dac + 1)/16 \times (VEXTIO / RBIAS) / 2 \times 64$$

where V_{EXTIO} is the voltage at terminal EXTIO. The bandgap reference voltage delivers an accurate voltage of 1.2 V. This reference is active when *extref_ena* = 0b in *config27*. An external decoupling capacitor C_{EXT} of 0.1 µF should be connected externally to terminal EXTIO for compensation. The bandgap reference can additionally be used for external reference operation. In that case, an external buffer with high impedance input should be applied in order to limit the bandgap load current to a maximum of 100 nA. The internal reference can be disabled and overridden by an external reference by setting the *extref_ena* control bit. Capacitor C_{EXT} may hence be omitted. Terminal EXTIO thus serves as either input or output node.

The full-scale output current can be adjusted from 30 mA down to 10 mA by varying resistor R_{BIAS}, programming *coarse_dac(3:0)*, or changing the externally applied reference voltage.

NOTE

With internal reference, the minimum Rbias resistor value is 1.28 kΩ. Resistor value below 1.28 kΩ is not recommended since it will program the full-scale current to go above 30 mA and potentially damages the device.

7.3.18 DAC Transfer Function

The CMOS DACs consist of a segmented array of PMOS current sources, capable of sourcing a full-scale output current up to 30 mA. Differential current switches direct the current to either one of the complementary output nodes IOUTP or IOUTN. Complementary output currents enable differential operation, thus canceling out common mode noise sources (digital feed-through, on-chip and PCB noise), dc offsets, even order distortion components, and increasing signal output power by a factor of two.

The full-scale output current is set using external resistor R_{BIAS} in combination with an on-chip bandgap voltage reference source (+1.2 V) and control amplifier. Current I_{BIAS} through resistor R_{BIAS} is mirrored internally to provide a maximum full-scale output current equal to 64 times I_{BIAS}.

The relation between IOUTP and IOUTN can be expressed as:

$$IOUT_{FS} = IOUTP + IOUTN$$

Copyright © 2011–2015, Texas Instruments Incorporated

We will denote current flowing into a node as – current and current flowing out of a node as + current. Since the output stage is a current source the current flows from the IOUTP and IOUTN pins. The output current flow in each pin driving a resistive load can be expressed as:

$IOUTP = IOUT_{FS} \times CODE / 65536$

$IOUTN = IOUT_{FS} \times (65535 - CODE) / 65536$

where CODE is the decimal representation of the DAC data input word

For the case where IOUTP and IOUTN drive resistor loads R_L directly, this translates into single ended voltages at IOUTP and IOUTN:

$VOUTP = IOUT1 \times R_L$

$VOUTN = IOUT2 \times R_L$

Assuming that the data is full scale (65535 in offset binary notation) and the R_L is 25 Ω, the differential voltage between pins IOUTP and IOUTN can be expressed as:

$VOUTP = 20mA \times 25\ \Omega = 0.5\ V$

$VOUTN = 0mA \times 25\ \Omega = 0\ V$

$VDIFF = VOUTP - VOUTN = 0.5V$

Note that care should be taken not to exceed the compliance voltages at node IOUTP and IOUTN, which would lead to increased signal distortion.

7.3.19 Analog Current Outputs

The DAC34H84 can be easily configured to drive a doubly terminated 50 Ω cable using a properly selected RF transformer. Figure 82 and Figure 83 show the 50 Ω doubly terminated transformer configuration with 1:1 and 4:1 impedance ratio, respectively. Note that the center tap of the primary input of the transformer has to be grounded to enable a DC current flow. Applying a 20 mA full-scale output current would lead to a 0.5 Vpp for a 1:1 transformer and a 1 Vpp output for a 4:1 transformer. The low dc-impedance between IOUTP or IOUTN and the transformer center tap sets the center of the ac-signal to GND, so the 1 Vpp output for the 4:1 transformer results in an output between –0.5 V and +0.5 V.

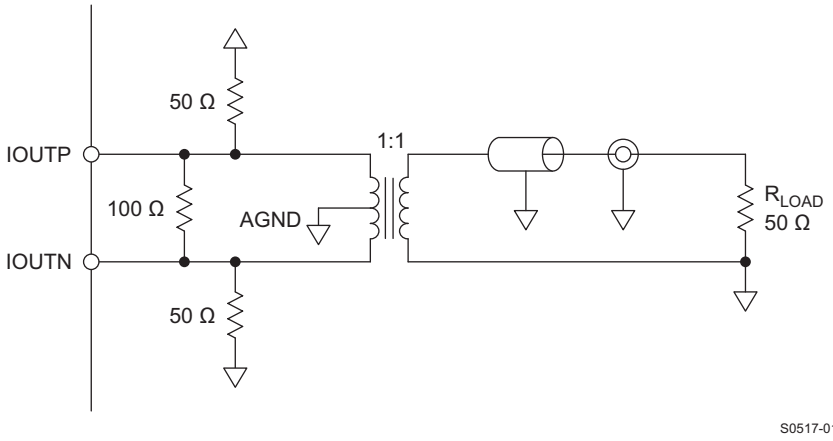

Figure 82. Driving a Doubly Terminated 50-Ω Cable Using a 1:1 Impedance Ratio Transformer

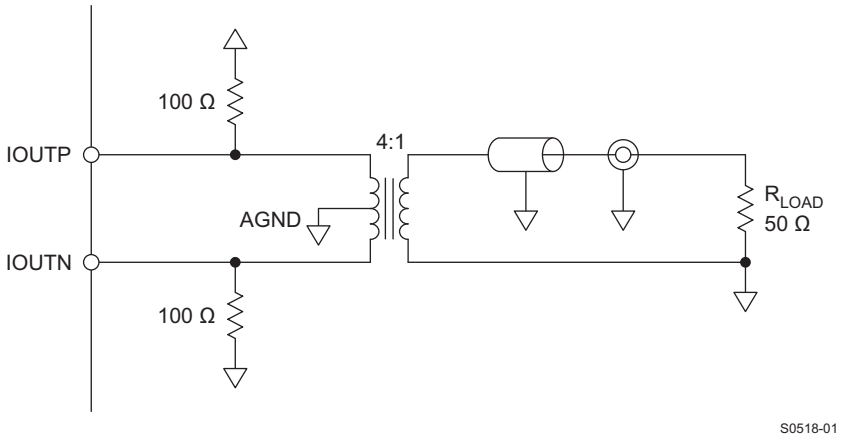

Figure 83. Driving a Doubly Terminated 50-Ω Cable Using a 4:1 Impedance Ratio Transformer

7.4 Device Functional Modes

7.4.1 Multi-Device Synchronization

In various applications, such as multi antenna systems where the various transmit channels information is correlated, it is required that multiple DAC devices are completely synchronized such that their outputs are phase aligned. The DAC34H84 architecture supports this mode of operation.

7.4.1.1 Multi-Device Synchronization: PLL Bypassed with Dual Sync Sources Mode

For single- or multi-device synchronization it is important that delay differences in the data are absorbed by the device so that latency through the device remains the same. Furthermore, to ensure that the outputs from each DAC are phase aligned it is necessary that data is read from the FIFO of each device simultaneously. In the DAC34H84 this is accomplished by operating the multiple devices in Dual Sync Sources mode. In this mode the additional OSTR signal is required by each DAC34H84 to be synchronized.

Data into the device is input as LVDS signals from one or multiple baseband ASICs or FPGAs. Data into multiple DAC devices can experience different delays due to variations in the digital source output paths or board level wiring. These different delays can be effectively absorbed by the DAC34H84 FIFO so that all outputs are phase aligned correctly.

Copyright © 2011–2015, Texas Instruments Incorporated

Device Functional Modes (continued)

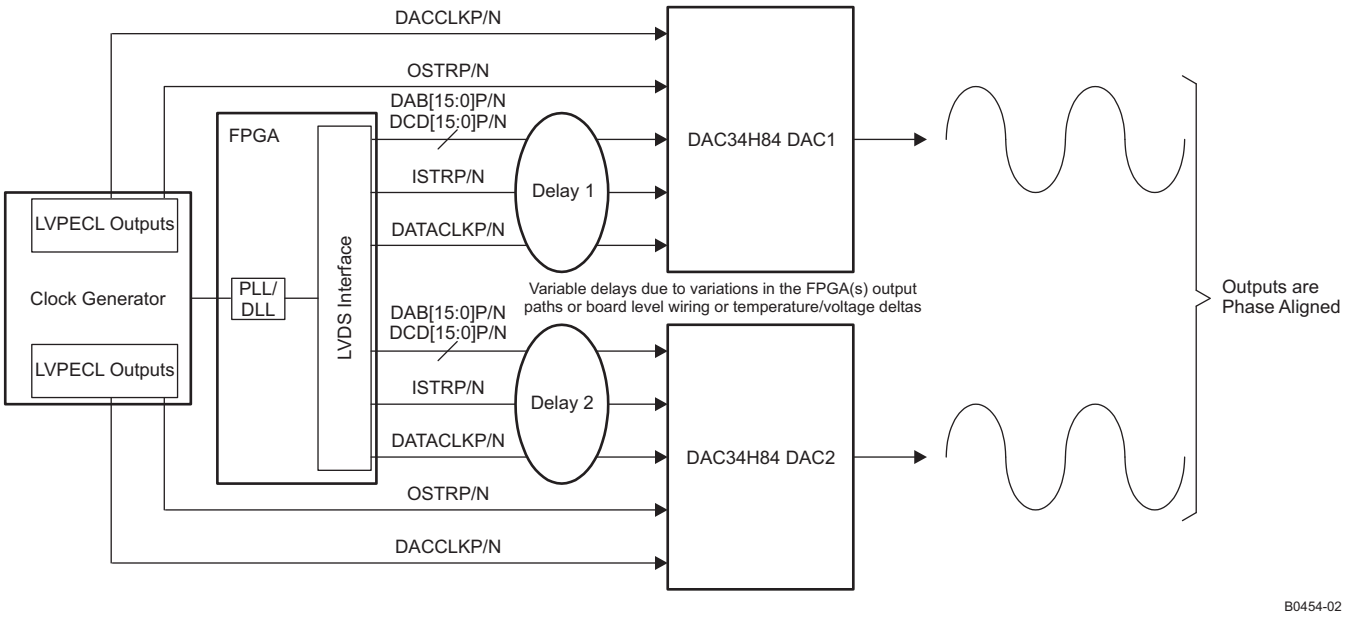

Figure 84. Synchronization System in Dual Sync Sources Mode with PLL Bypassed

For correct operation both OSTR and DACCLK must be generated from the same clock domain. The OSTR signal is sampled by DACCLK and must satisfy the timing requirements in the specifications table. If the clock generator does not have the ability to delay the DACCLK to meet the OSTR timing requirement, the polarity of the DACCLK outputs can be swapped with respect to the OSTR ones to create 180 degree phase delay of the DACCLK. This may help establish proper setup and hold time requirement of the OSTR signal.

Careful board layout planning must be done to ensure that the DACCLK and OSTR signals are distributed from device to device with the lowest skew possible as this will affect the synchronization process. In order to minimize the skew across devices it is recommended to use the same clock distribution device to provide the DACCLK and OSTR signals to all the DAC devices in the system.

Copyright © 2011–2015, Texas Instruments Incorporated

Device Functional Modes (continued)

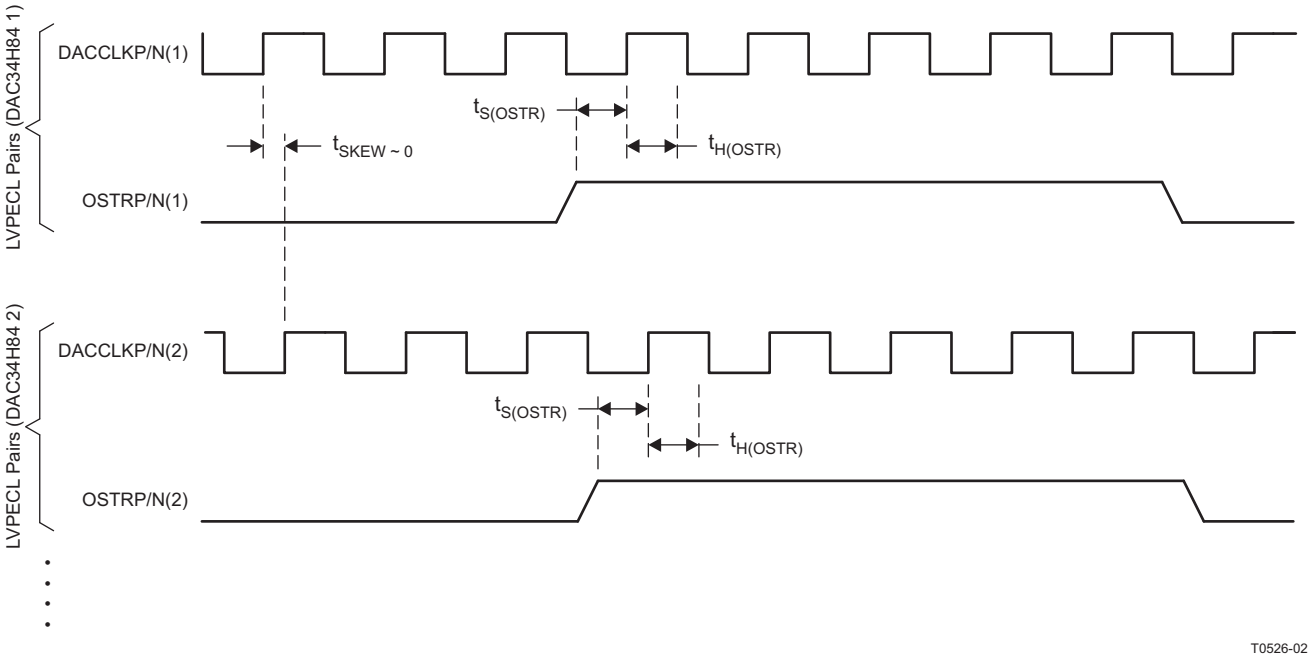

Figure 85. Timing Diagram for LVPECL Synchronization Signals

The following steps are required to ensure the devices are fully synchronized. The procedure assumes all the DAC34H84 devices have a DACCLK and OSTR signal and must be carried out on each device.

1. Start-up the device as described in the power-up sequence. Set the DAC34H84 in Dual Sync Sources mode and select OSTR as the clock divider sync source (*clkdiv_sync_sel* in register *config32*).
2. Sync the clock divider and FIFO pointers.
3. Verify there are no FIFO alarms either through register *config5* or through the ALARM pin.
4. Disable clock divider sync by setting *clkdiv_sync_ena* to 0b in register *config0*.

After these steps all the DAC34H84 outputs will be synchronized.

7.4.1.2 Multi-Device Synchronization: PLL Enabled with Dual Sync Sources Mode

The DAC34H84 allows exact phase alignment between multiple devices even when operating with the internal PLL clock multiplier. In PLL clock mode, the PLL generates the DAC clock and an internal OSTR signal from the reference clock applied to the DACCLK inputs so there is no need to supply an additional LVPECL OSTR signal.

For this method to operate properly the SYNC signal should be set to reset the PLL N dividers to a known state by setting *pll_ndivsync_ena* in register *config24* to 1b. The SYNC signal resets the PLL N dividers with a rising edge, and the timing relationship $t_{s(SYNC_PLL)}$ and $t_{h(SYNC_PLL)}$ are relative to the reference clock presented on the DACCLK pin.

Both SYNC and DACCLK can be set as low frequency signals to greatly simplifying trace routing (SYNC can be just a pulse as a single rising edge is required, if using a periodic signal it is recommended to clear the *pll_ndivsync_ena* bit after resetting the PLL dividers). Besides the $t_{s(SYNC_PLL)}$ and $t_{h(SYNC_PLL)}$ requirement between SYNC and DACCLK, there is no additional required timing relationship between the SYNC and ISTR signals or between DACCLK and DATACLK. The only restriction as in the PLL disabled case is that the DACCLK and SYNC signals are distributed from device to device with the lowest skew possible.

Copyright © 2011–2015, Texas Instruments Incorporated

Device Functional Modes (continued)

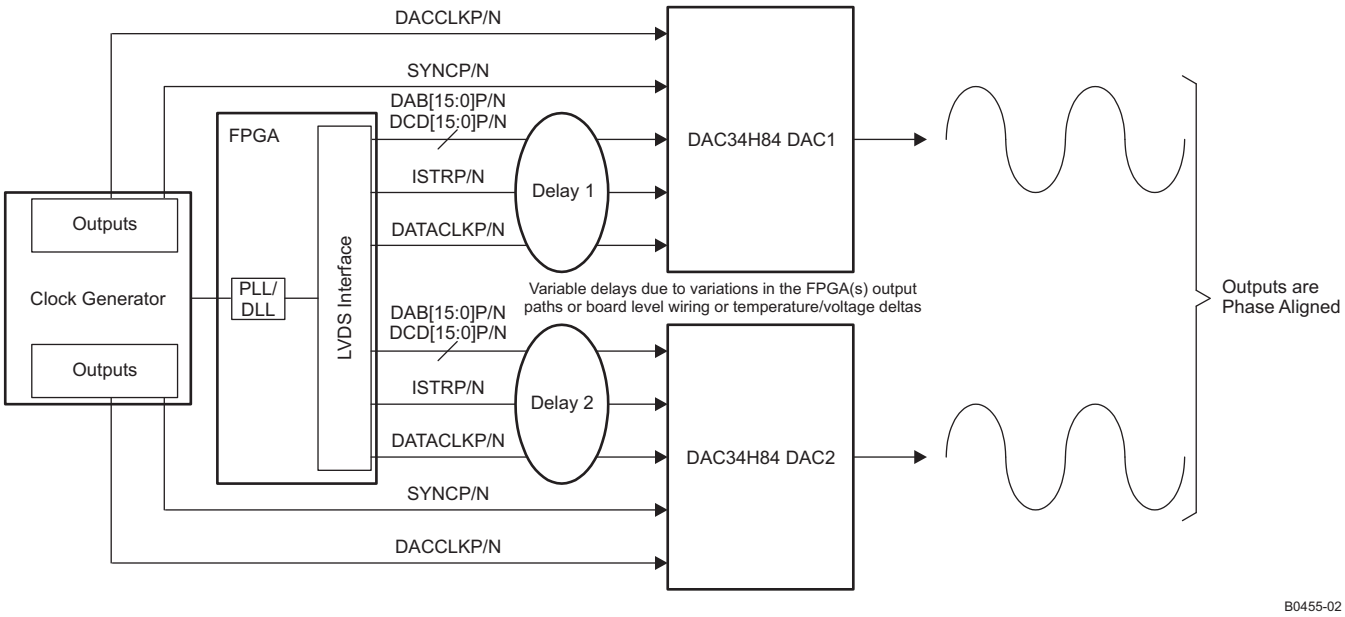

Figure 86. Synchronization System in Dual Sync Sources Mode with PLL Enabled

The following steps are required to ensure the devices are fully synchronized. The procedure assumes all the DAC34H84 devices have a DACCLK and OSTR signal and must be carried out on each device.

1. Start-up the device as described in the power-up sequence. Set the DAC34H84 in Dual Sync Sources mode and enable SYNC to reset the PLL dividers (set *pll_ndivsync_ena* in register *config24* to 1b).
2. Reset the PLL dividers with a rising edge on SYNC.
3. Disable PLL dividers resetting.
4. Sync the clock divider and FIFO pointers.
5. Verify there are no FIFO alarms either through register *config5* or through the ALARM pin.
6. Disable clock divider sync by setting *clkdiv_sync_ena* to 0b in register *config0*.

After these steps all the DAC34H84 outputs will be synchronized.

7.4.1.3 Multi-Device Operation: Single Sync Source Mode

In Single Sync Source mode, the FIFO write and read pointers are reset from the same sync source, either ISTR or SYNC. Although the FIFO in this mode can still absorb the data delay differences due to variations in the digital source output paths or board level wiring it is impossible to guarantee data will be read from the FIFO of different devices simultaneously thus preventing exact phase alignment.

In Single Sync Source mode the FIFO read pointer reset is handoff between the two clock domains (DATACLK and FIFO OUT CLOCK) by simply re-sampling the write pointer reset. Since the two clocks are asynchronous there is a small but distinct possibility of a meta-stability during the pointer handoff. This meta-stability can cause the outputs of the multiple devices to slip by up to 2 DAC clock cycles.

When the PLL is enabled with Single Sync Source mode, the FIFO read pointer is not synchronized by the OSTR signal. Therefore, there is no restriction on the PLL PFD frequency as described in the previous section.

Copyright © 2011–2015, Texas Instruments Incorporated

Device Functional Modes (continued)

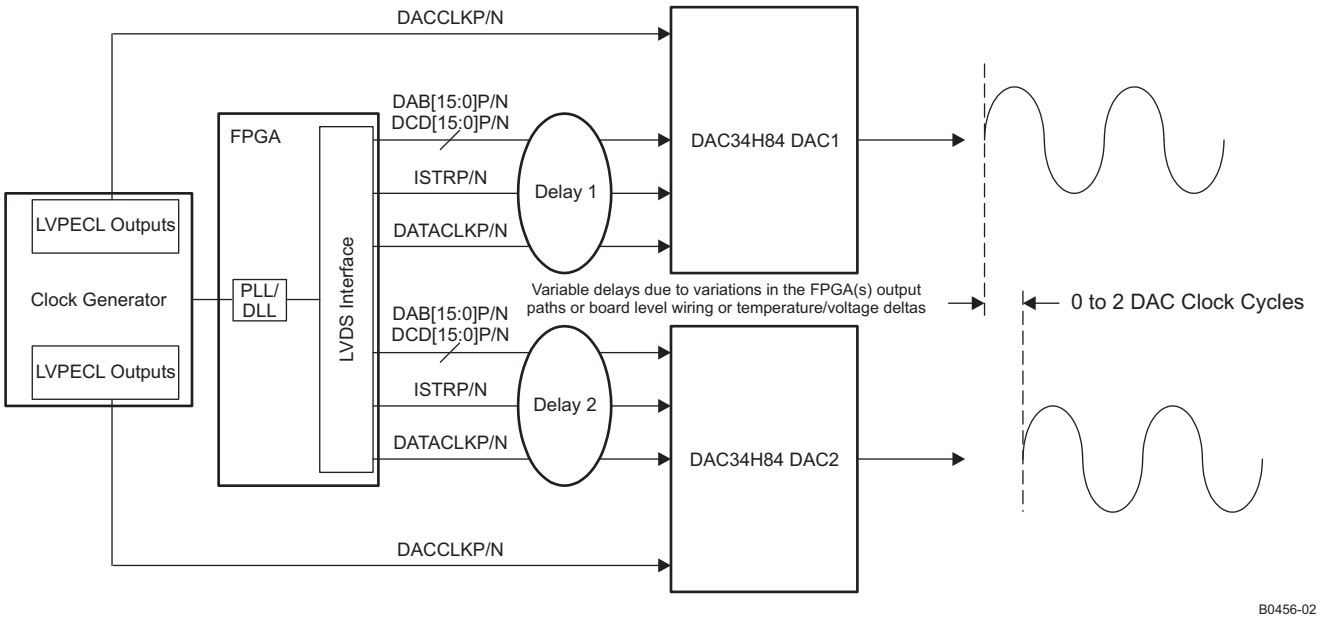

Figure 87. Multi-Device Operation in Single Sync Source Mode

7.5 Programming

7.5.1 Power-Up Sequence

The following startup sequence is recommended to power-up the DAC34H84:

1. Set TXENA low
2. Supply all 1.2-V voltages (DACVDD, DIGVDD, CLKVDD and VFUSE) and all 3.3-V voltages (AVDD, IOVDD, and PLLAVDD). The 1.2-V and 3.3-V supplies can be powered up simultaneously or in any order. There are no specific requirements on the ramp rate for the supplies.
3. Provide all LVPECL inputs: DACCLKP/N and the optional OSTRP/N. These inputs can also be provided after the SIF register programming.
4. Toggle the RESETB pin for a minimum 25 ns active low pulse width.
5. Program the SIF registers.
6. Program *fuse_sleep* (*config27*, bit<11>) to put the internal fuses to sleep.
7. FIFO configuration needed for synchronization:
   (a) Program *syncsel_fifoin(3:0)* (*config32*, bit<15:12>) to select the FIFO input pointer sync source.
   (b) Program *syncsel_fifoout(3:0)* (*config32*, bit<11:8>) to select the FIFO output pointer sync source.
   (c) Program *syncsel_fifo_input(1:0)* (*config31*, bit<3:2>) to select the FIFO input sync source.
8. Clock divider configuration needed for synchronization:
   (a) Program *clkdiv_sync_sel* (*config32*, bit<0>) to select the clock divider sync source.
   (b) Program *clkdiv_sync_ena* (*config0*, bit<2>) to 1b to enable clock divider sync.
   (c) For multi-DAC synchronization in PLL mode, program *pll_ndivsync_ena* (*config24*, bit<11>) to 1b to synchronize the PLL N-divider.
9. Provide all LVDS inputs (D[15:0]P/N, DCD[15:0]P/N, DATACLKP/N, ISTRP/N, SYNCP/N and PARITYP/N) simultaneously. Synchronize the FIFO and clock divider by providing the pulse or periodic signals needed.
   (a) For Single Sync Source Mode where either ISTRP/N or SYNCP/N is used to sync the FIFO, a single rising edge for FIFO and clock divider sync is recommended. Periodic sync signal is not recommended due to the non-deterministic latency of the sync signal through the clock domain transfer.
   (b) For Dual Sync Sources Mode, both single pulse or periodic sync signals can be used.
   (c) For multi-DAC synchronization in PLL mode, the LVDS SYNCP/N signal is used to sync the PLL N-

Copyright © 2011–2015, Texas Instruments Incorporated

Programming (continued)

divider and can be sourced from either the FPGA/ASIC pattern generator or clock distribution circuit as long as the $t_{(SYNC_PLL)}$ setup and hold timing requirement is met with respect to the reference clock source at DACCLKP/N pins. The LVDS SYNCP/N signal can be provided at this point.

10. FIFO and clock divider configurations after all the sync signals have provided the initial sync pulses needed for synchronization:
    (a) For Single Sync Source Mode where the clock divider sync source is either ISTRP/N or SYNCP/N, clock divider syncing must be disabled after DAC34H84 initialization and before the data transmission by setting *clkdiv_sync_ena* (*config0*, bit 2) to 0b.
    (b) For Dual Sync Sources Mode, where the clock divider sync source is from the OSTR signal (either from external OSTRP/N or internal PLL N divider output), the clock divider syncing may be enabled at all time.
    (c) Optionally, to prevent accidental syncing of the FIFO when sending the ISTRP/N or SYNCP/N pulse to other digital blocks such as NCO, QMC, ..., disable FIFO syncing by setting *syncsel_fifoin(3:0)* and *syncsel_fifoout(3:0)* to 0000b after the FIFO input and output pointers are initialized. If the FIFO and sync remain enabled after initialization, the ISTRP/N or SYNCP/N pulse must occur in ways to not disturb the FIFO operation. Refer to the INPUT FIFO section for detail.
    (d) Disable PLL N-divider syncing by setting *pll_ndivsync_ena* (*config24*, bit<11>) to 0b.
11. Enable transmit of data by asserting the TXENA pin or *set sif_txenable* to 1b.
12. At any time, if any of the clocks (for example, DATACLK or DACCLK) is lost or a FIFO collision alarm is detected, a complete resynchronization of the DAC is necessary. Set TXENABLE low and repeat steps 7 through 11. Program the FIFO configuration and clock divider configuration per steps 7 and 8 appropriately to accept the new sync pulse or pulses for the synchronization.

7.5.2 Example Start-Up Routine

7.5.2.1 Device Configuration

f_{DATA} = 491.52 MSPS

Interpolation = 2x

Input data = baseband data

f_{OUT} = 122.88 MHz

PLL = Enabled

Full Mixer = Enabled

Dual Sync Sources Mode

7.5.2.2 PLL Configuration

f_{REFCLK} = 491.52 MHz at the DACCLKP/N LVPECL pins

f_{DACCLK} = f_{DATA} x Interpolation = 983.04 MHz

f_{VCO} = 4 x f_{DACCLK} = 3932.16 MHz (keep f_{VCO} between 3.3 GHz to 4 GHz)

PFD = f_{OSTR} = 30.72 MHz

N = 16, M = 32, P = 4, single charge pump

pll_vco(5:0) = 111011b (59)

7.5.2.3 NCO Configuration

f_{NCO} = 122.88 MHz

f_{NCO_CLK} = 983.04 MHz

freq = f_{NCO} x 2^32 / 983.04 = 536870912 = 0x20000000

Copyright © 2011–2015, Texas Instruments Incorporated

Programming (continued)

phaseaddAB(31:0) or *phaseaddCD*(31:0) = 0x20000000

NCO SYNC = sif_sync

7.5.2.4 Example Start-Up Sequence

Table 10. Example Start-Up Sequence Description

STEP	READ/WRITE	ADDRESS	VALUE	DESCRIPTION
1	N/A	N/A	N/A	Set TXENA Low
2	N/A	N/A	N/A	Power-up the device
3	N/A	N/A	N/A	Apply LVPECL DACCLKP/N for PLL reference clock
4	N/A	N/A	N/A	Toggle RESETB pin
5	Write	0x00	0xF19F	QMC offset and correction enabled, 2x int, FIFO enabled, Alarm enabled, clock divider sync enabled, inverse sinc filter enabled.
6	Write	0x01	0x040E	Single parity enabled, FIFO alarms enabled (2 away, 1 away, and collision).
7	Write	0x02	0x7052	Output shut-off when DACCLK gone, DATACLK gone, and FIFO collision. Mixer block with NCO enabled, twos complement.
8	Write	0x03	0xA000	Output current set to 20 mAFS with internal reference and 1.28-kΩ R_{BIAS} resistor.
9	Write	0x07	0xD8FF	Un-mask FIFO collision, DACCLK-gone, and DATACLK-gone alarms to the Alarm output.
10	Write	0x08	N/A	Program the desired channel A QMC offset value. (Causes Auto-Sync for QMC AB-Channels Offset Block)
11	Write	0x09	N/A	Program the desired FIFO offset value and channel B QMC offset value.
12	Write	0x0A	N/A	Program the desired channel C QMC offset value. (Causes Auto-Sync for QMC CD-Channels Offset Block)
13	Write	0x0B	N/A	Program the desired channel D QMC offset value.
14	Write	0x0C	N/A	Program the desired channel A QMC gain value.
15	Write	0x0D	N/A	Coarse mixer mode not used. Program the desired channel B QMC gain value.
16	Write	0x0E	N/A	Program the desired channel B QMC gain value.
17	Write	0x0F	N/A	Program the desired channel C QMC gain value.
18	Write	0x10	N/A	Program the desired channel AB QMC phase value. (Causes Auto-Sync QMC AB-Channels Correction Block)
19	Write	0x11	N/A	Program the desired channel CD QMC phase value. (Causes Auto-Sync for the QMC CD-Channels Correction Block)
20	Write	0x12	N/A	Program the desired channel AB NCO phase offset value. (Causes Auto-Sync for Channel AB NCO Mixer)
21	Write	0x13	N/A	Program the desired channel CD NCO phase offset value. (Causes Auto-Sync for Channel CD NCO Mixer)
22	Write	0x14	0x2000	Program the desired channel AB NCO frequency value
23	Write	0x15	0x0000	Program the desired channel AB NCO frequency value
24	Write	0x16	0x2000	Program the desired channel CD NCO frequency value
25	Write	0x17	0x0000	Program the desired channel CD NCO frequency value
26	Write	0x18	0x2C67	PLL enabled, PLL N-dividers sync enabled, single charge pump, prescaler = 4.
27	Write	0x19	0x20F4	M = 32, N = 16, PLL VCO bias tune = 01b
28	Write	0x1A	0xEC00	PLL VCO coarse tune = 59
29	Write	0x1B	0x0800	Internal reference
30	Write	0x1E	0x9999	QMC offset AB, QMC offset CD, QMC correction AB, and QMC correction CD can be synced by sif_sync or auto-sync from register write
31	Write	0x1F	0x4440	Mixer AB and CD values synced by SYNCP/N. NCO accumulator synced by SYNCP/N.

Copyright © 2011–2015, Texas Instruments Incorporated

Programming (continued)

Table 10. Example Start-Up Sequence Description (continued)

STEP	READ/WRITE	ADDRESS	VALUE	DESCRIPTION
32	Write	0x20	0x2400	FIFO Input Pointer Sync Source = ISTR FIFO Output Pointer Sync Source = OSTR (from PLL N-divider output) Clock Divider Sync Source = OSTR
33	N/A	N/A	N/A	Provide all the LVDS DATA and DATACLK Provide rising edge ISTRP/N and rising edge SYNCP/N to sync the FIFO input pointer and PLL N-dividers.
34	Read	0x18	N/A	Read back pll_lfvolt(2:0). If the value is not optimal, adjust pll_vco(5:0) in 0x1A.
35	Write	0x05	0x0000	Clear all alarms in 0x05.
36	Read	0x05	N/A	Read back all alarms in 0x05. Check for PLL lock, FIFO collision, DACCLK-gone, DATACLK-gone, ... Fix the error appropriately. Repeat step 34 and 35 as necessary.
37	Write	0x1F	0x4442	Sync all the QMC blocks using sif_sync. These blocks can also be synced via auto-sync through appropriate register writes.
38	Write	0x00	0xF19B	Disable clock divider sync.
39	Write	0x1F	0x4448	Set sif_sync to 0b for the next sif_sync event.
40	Write	0x20	0x0000	Disable FIFO input and output pointer sync.
41	Write	0x18	0x2467	Disable PLL N-dividers sync.
42	N/A	N/A	N/A	Set TXENA high. Enable data transmission.

Copyright © 2011–2015, Texas Instruments Incorporated

7.6 Register Map

Table 11. Register Map(1)

Name	Address	Default	(MSB) Bit 15	Bit 14	Bit 13	Bit 12	Bit 11	Bit 10	Bit 9	Bit 8	Bit 7	Bit 6	Bit 5	Bit 4	Bit 3	Bit 2	Bit 1	(LSB) Bit 0
config0	0x00	0x049C	qmc_ offsetAB_ ena	qmc_ offsetCD_ ena	qmc_ corrAB_ ena	qmc_ corrCD_ ena	interp(3:0)				fifo_ena	reserved	reserved	alarm_out_ ena	alarm_out pol	clkdiv_sync_ ena	invsincAB_ ena	invsincCD_ ena
config1	0x01	0x040E	iotest_ ena	reserved	reserved	64cnt_ ena	oddeven_ parity	single_ parity_ ena	dual_ parity_ ena	rev_ interface	dacA_ complement	dacB_ complement	dacC_ complement	dacD_ complement	alarm_ 2away_ ena	alarm_ 1away_ ena	alarm_ collision_ ena	reserved
config2	0x02	0x7000	reserved	dacclk gone_ena	dataclk gone_ena	collision_ gone_ena	reserved	reserved	reserved	reserved	sif4_ena	mixer_ena	mixer_gain	nco_ena	revbus	reserved	twos	reserved
config3	0x03	0xF000	coarse_dac(3:0)				reserved				reserved							sif_txenable
config4	0x04	NA	iotest_results(15:0)															
config5	0x05	NA	alarm_ from_ zerochk	reserved	alarms_from_fifo(2:0)			alarm_ dacclk_ gone	alarm_ dataclk_ gone	alarm_ output_ gone	alarm_ from_ iotest	reserved	alarm_ from_pll	alarm_ Aparity	alarm_ Bparity	alarm_ Cparity	alarm_ Dparity	reserved
config6	0x06	NA	tempdata(7:0)								reserved						reserved	reserved
config7	0x07	0xFFFF	alarms_mask(15:0)															
config8	0x08	0x0000	reserved	reserved	reserved	qmc_offsetA(12:0)												
config9	0x09	0x8000	fifo_offset(2:0)			qmc_offsetB(12:0)												
config10	0x0A	0x0000	reserved	reserved	reserved	qmc_offsetC(12:0)												
config11	0x0B	0x0000	reserved	reserved	reserved	qmc_offsetD(12:0)												
config12	0x0C	0x0400	reserved	reserved	reserved	reserved	reserved	qmc_gainA(10:0)										
config13	0x0D	0x0400	cmix(3:0)				reserved	qmc_gainB(10:0)										
config14	0x0E	0x0400	reserved	reserved	reserved	reserved	reserved	qmc_gainC(10:0)										
config15	0x0F	0x0400	output_delayAB(1:0)		output_delayCD(1:0)		reserved	qmc_gainD(10:0)										
config16	0x10	0x0000	reserved	reserved	reserved	reserved	qmc_phaseAB(11:0)											
config17	0x11	0x0000	reserved	reserved	reserved	reserved	qmc_phaseCD(11:0)											
config18	0x12	0x0000	phase_offsetAB(15:0)															
config19	0x13	0x0000	phase_offsetCD(15:0)															
config20	0x14	0x0000	phase_addAB(15:0)															
config21	0x15	0x0000	phase_addAB(31:16)															
config22	0x16	0x0000	phase_addCD(15:0)															
config23	0x17	0x0000	phase_addCD(31:16)															
config24	0x18	NA	reserved			pll_reset	pll_ ndivsync_ ena	pll_ena	reserved		pll_cp(1:0)		pll_p(2:0)			pll_lfvolt(2:0)		
config25	0x19	0x0440	pll_m(7:0)								pll_n(3:0)				pll_vcoitune(2:0)		reserved	
config26	0x1A	0x0020	pll_vco(5:0)						reserved	reserved	bias_ sleep	tsense_ sleep	pll_sleep	clkrecv_ sleep	sleepA	sleepB	sleepC	sleepD
config27	0x1B	0x0000	extref_ ena	reserved	reserved	reserved	fuse_ sleep	reserved	reserved	reserved	reserved	reserved	reserved					
config28	0x1C	0x0000	reserved								reserved							

(1) Unless otherwise noted, all reserved registers should be programmed to default values.

Copyright © 2011–2015, Texas Instruments Incorporated

Register Map (continued)

Table 11. Register Map(1) (continued)

Name	Address	Default	(MSB) Bit 15	Bit 14	Bit 13	Bit 12	Bit 11	Bit 10	Bit 9	Bit 8	Bit 7	Bit 6	Bit 5	Bit 4	Bit 3	Bit 2	Bit 1	(LSB) Bit 0
config29	0x1D	0x0000	reserved								reserved							
config30	0x1E	0x1111	syncsel_qmoffsetAB(3:0)				syncsel_qmoffsetCD(3:0)				syncsel_qmcorrAB(3:0)				syncsel_qmcorrCD(3:0)			
config31	0x1F	0x1140	syncsel_mixerAB(3:0)				syncsel_mixerCD(3:0)				syncsel_nco(3:0)				syncsel_fifo_input		sif_sync	reserved
config32	0x20	0x2400	syncsel_fifoin(3:0)				syncsel_fifoout(3:0)				reserved							clkdiv_ sync_sel
config33	0x21	0x0000	reserved															
config34	0x22	0x1B1B	pathA_in_set(1:0)		pathB_in_set(1:0)		pathC_in_set(1:0)		pathD_in_set(1:0)		DACA_out_set(1:0)		DACB_out_set(1:0)		DACC_out_set(1:0)		DACD_out_set(1:0)	
config35	0x23	0xFFFF	sleep_cntl(15:0)															
config36	0x24	0x0000	datadly(2:0)			clkdly(2:0)			reserved									
config37	0x25	0x7A7A	iotest_pattern0															
config38	0x26	0xB6B6	iotest_pattern1															
config39	0x27	0xEAEA	iotest_pattern2															
config40	0x28	0x4545	iotest_pattern3															
config41	0x29	0x1A1A	iotest_pattern4															
config42	0x2A	0x1616	iotest_pattern5															
config43	0x2B	0xAAAA	iotest_pattern6															
config44	0x2C	0xC6C6	iotest_pattern7															
config45	0x2D	0x0004	reserved	ostrtodig_ sel	ramp_ena	reserved												sifdac_ena
config46	0x2E	0x0000	grp_delayA(7:0)								grp_delayB(7:0)							
config47	0x2F	0x0000	grp_delayC(7:0)								grp_delayD(7:0)							
config48	0x30	0x0000	sifdac(15:0)															
version	0x7F	0x5409	reserved						reserved	reserved		reserved		deviceid(1:0)		versionid(2:0)		

Copyright © 2011–2015, Texas Instruments Incorporated

7.6.1 Register Descriptions

Table 12. Register Name: config0 – Address: 0x00, Default: 0x049C

Register Name	Address	Bit	Name	Function		Default Value
config0	0x00	15	qmc_offsetAB_ena	When set, the digital Quadrature Modulator Correction (QMC) offset correction for the AB data path is enabled.		0
		14	qmc_offsetCD_ena	When set, the digital Quadrature Modulator Correction (QMC) offset correction for the CD data path is enabled.		0
		13	qmc_corrAB_ena	When set, the QMC phase and gain correction circuitry for the AB data path is enabled.		0
		12	qmc_corrCD_ena	When set, the QMC phase and gain correction circuitry for the CD data path is enabled.		0
		11:8	interp(3:0)	These bits define the interpolation factor		0100
				interp	**Interpolation Factor**	
				0000	1x	
				0001	2x	
				0010	4x	
				0100	8x	
				1000	16x	
		7	fifo_ena	When set, the FIFO is enabled. **When the FIFO is disabled DACCCLKP/N and DATACLKP/N must be aligned (not recommended).**		1
		6	Reserved	Reserved for factory use.		0
		5	Reserved	Reserved for factory use.		0
		4	alarm_out_ena	When set, the ALARM pin becomes an output. When cleared, the ALARM pin is 3-stated.		1
		3	alarm_out_pol	This bit changes the polarity of the ALARM signal. 0: Negative logic 1: Positive logic		1
		2	clkdiv_sync_ena	When set, enables the syncing of the clock divider and the FIFO output pointer using the sync source selected by register *config32*. The internal divided-down clocks will be phase aligned after syncing. Refer to the *Power-Up Sequence* section for more detail.		1
		1	invsincAB_ena	When set, the inverse sinc filter for the AB data path is enabled.		0
		0	invsincCD_ena	When set, the inverse sinc filter for the CD data path is enabled.		0

Copyright © 2011–2015, Texas Instruments Incorporated

Table 13. Register Name: config1 – Address: 0x01, Default: 0x040E

Register Name	Address	Bit	Name	Function	Default Value
config1	0x01	15	iotest_ena	When set, enables the data pattern checker test. ***The outputs are deactivated regardless of the state of TXENA and sif_txenable.***	0
		14	Reserved	Reserved for factory use.	0
		13	Reserved	Reserved for factory use.	0
		12	64cnt_ena	When set, enables resetting of the alarms after 64 good samples with the goal of removing unnecessary errors. For instance, when checking setup/hold through the pattern checker test, there may initially be errors. Setting this bit removes the need for a SIF write to clear the alarm register.	0
		11	oddeven_parity	Selects between odd and even parity check 0: Even parity 1: Odd parity	0
		10	single_parity_ena	When set, enables parity checking of each input word using the 1 PARITYP/N parity input. It should match the **oddeven_parity** register setting.	1
		9	dual_parity_ena	When set, enables parity checking using the ISTR signal to 0 source the parity bit. The parity bit should match the **oddeven_parity** register setting.	0
		8	rev_interface	When set, the PARITY, SYNC, and ISTR inputs are rotated to allow complete reversal of the data interface when setting the rev_interface bit. When *rev_interface* = 1b, the following changes occurs 1. SYNCP/N becomes ISTRP/N 2. PARITYP/N becomes SYNCP/N 3. ISTRP/N becomes PARITYP/N	0
		7	dacA_complement	When set, the DACA output is complemented. This allows to effectively change the + and – designations of the LVDS data lines.	0
		6	dacB_complement	When set, the DACB output is complemented. This allows to effectively change the + and – designations of the LVDS data lines.	0
		5	dacC_complement	When set, the DACC output is complemented. This allows to effectively change the + and – designations of the LVDS data lines.	0
		4	dacD_complement	When set, the DACD output is complemented. This allows to effectively change the + and – designations of the LVDS data lines.	0
		3	alarm_2away_ena	When set, the alarm from the FIFO indicating the write and read pointers being 2 away is enabled.	1
		2	alarm_1away_ena	When set, the alarm from the FIFO indicating the write and read pointers being 1 away is enabled.	1
		1	alarm_collision_ena	When set, the alarm from the FIFO indicating a collision between the write and read pointers is enabled.	1
		0	Reserved	Reserved for factory use.	0

Copyright © 2011–2015, Texas Instruments Incorporated

Table 14. Register Name: config2 – Address: 0x02, Default: 0x7000

Register Name	Address	Bit	Name	Function	Default Value
config2	0x02	15	Reserved	Reserved for factory use.	0
		14	dacclkgone_ena	When set, the DACCLK-gone signal from the clock monitor circuit can be used to shut off the DAC outputs. The corresponding alarms, *alarm_dacclk_gone* and *alarm_output_gone*, must not be masked (for example, *Config7*, bit <10> and bit <8> must set to 0b).	1
		13	dataclkgone_ena	When set, the DATACLK-gone signal from the clock monitor circuit can be used to shut off the DAC outputs. The corresponding alarms, *alarm_dataclk_gone* and *alarm_output_gone*, must not be masked (for example, Config7, bit <9> and bit <8> must set to 0b).	1
		12	collisiongone_ena	When set, the FIFO collision alarms can be used to shut off the DAC outputs. The corresponding alarms, *alarm_fifo_collision* and *alarm_output_gone*, must not be masked (for example, Config7, bit <13> and bit <8> must set to 0b).	1
		11	Reserved	Reserved for factory use.	0
		10	Reserved	Reserved for factory use.	0
		9	Reserved	Reserved for factory use.	0
		8	Reserved	Reserved for factory use.	0
		7	sif4_ena	When set, the serial interface (SIF) is a 4 bit interface, otherwise it is a 3-bit interface.	0
		6	mixer_ena	When set, the mixer block is enabled.	0
		5	mixer_gain	When set, a 6dB gain is added to the mixer output.	0
		4	nco_ena	When set, the NCO is enabled. This is not required for coarse mixing.	0
		3	revbus	When set, the input bits for the data bus are reversed. MSB becomes LSB.	0
		2	Reserved	Reserved for factory use.	0
		1	twos	When set, the input data format is expected to be 2s-complement. When cleared, the input is expected to be offset-binary.	0
		0	Reserved	Reserved for factory use.	0

Table 15. Register Name: config3 – Address: 0x03, Default: 0xF000

Register Name	Address	Bit	Name	Function	Default Value
config3	0x03	15:12	coarse_dac(3:0)	Scales the output current in 16 equal steps. $I_{FS} = \frac{V_{EXTIO}}{R_{BIAS}} \times 2 \times (coarse_dac + 1)$	1111
		11:8	Reserved	Reserved for factory use.	0000
		7:1	Reserved	Reserved for factory use.	0000000
		0	sif_txenable	When set, the internal value of TXENABLE is set to 1b. To enable analog output data transmission, set *sif_txenable* to 1b **or** pull CMOS TXENA pin (N9) to high. To disable analog output, set *sif_txenable* to 0b **and** pull CMOS TXENA pin (N9) to low.	0

Table 16. Register Name: config4 – Address: 0x04, Default: No RESET Value (Write to Clear)

Register Name	Address	Bit	Name	Function	Default Value
config4	0x04	15:0	iotest_results(15:0)	Bits in iotest_results with logic value of 1b tell which bit in either DAB[15:0] bus or DCD[15:0] bus failed during the pattern checker test. *iotest_results*(15:8) correspond to the data bits on both DAB[15:8] and DCD[15:8]. *iotest_results*(7:0) correspond to the data bits on both DAB[7:0] and DCD[7:0].	No RESET Value

Copyright © 2011–2015, Texas Instruments Incorporated

Table 17. Register Name: config5 – Address: 0x05, Default: Setup and Power-Up Conditions Dependent (Write to Clear)

Register Name	Address	Bit	Name	Function	Default Value
config5	0x05	15	alarm_from_zerochk	This alarm indicates the 8-bit FIFO write pointer address has an all zeros patterns. Due to pointer address being a shift register, this is not a valid address and will cause the write pointer to be stuck until the next sync. This error is typically caused by timing error or improper power start-up sequence. If this alarm is asserted, resynchronization of FIFO is necessary. Refer to the *Power-Up Sequence* section for more detail.	NA
		14	Reserved	Reserved for factory use.	NA
		13:11	alarms_from_fifo(2:0)	Alarm indicating FIFO pointer collisions and nearness: 000: All fine 001: Pointers are 2 away 01x: Pointers are 1 away 1xx: FIFO pointer collision If the FIFO pointer collision alarm is set when *collisiongone_ena* is enabled, the FIFO must be re-synchronized and the bits must be cleared to resume normal operation.	NA
		10	alarm_dacclk_gone	Alarm indicating the DACCLK has been stopped. If the bit is set when *dacclkgone_ena* is enabled, the DACCLK must resume and the bit must be cleared to resume normal operation.	NA
		9	alarm_dataclk_gone	Alarm indicating the DATACLK has been stopped. If the bit is set when *dataclkgone_ena* is enabled, the DATACLK must resume and the bit must be cleared to resume normal operation.	NA
		8	alarm_output_gone	Alarm indicating either *alarm_dacclk_gone*, *alarm_dataclk_gone*, or *alarm_fifo_collision* are asserted. It controls the output. When high it will output 0x8000 for each output connected to the DAC. If the bit is set when *dacclkgone_ena*, *dataclkgone_ena*, or *collisiongone_ena* are enabled, then the corresponding errors must be fixed and the bits must be cleared to resume normal operation.	NA
		7	alarm_from_iotest	Alarm indicating the input data pattern does not match the pattern in the iotest_pattern registers. When data pattern checker mode is enabled, this alarm in register config5, bit7 is the only valid alarm. Other alarms in register config5 are not valid and can be disregarded.	NA
		6	Reserved	Reserved for factory use.	NA
		5	alarm_from_pll	Alarm indicating the PLL has lost lock. For version ID 001, *alarm_from_PLL* may not indicate the correct status of the PLL. Refer to *pll_lfvolt(2:0)* in register config24 for proper PLL lock indication.	NA
		4	alarm_Aparity	In dual parity mode, alarm indicating a parity error on the A word. In single parity mode, alarm on the 32-bit data captured on the rising edge of DATACLKP/N.	NA
		3	alarm_Bparity	In dual parity mode, alarm indicating a parity error on the B word. In single parity mode, alarm on the 32-bit data captured on the falling edge of DATACLKP/N.	NA
		2	alarm_Cparity	In dual parity mode, alarm indicating a parity error on the C word.	NA
		1	alarm_Dparity	In dual parity mode, alarm indicating a parity error on the D word.	NA
		0	Reserved	Reserved for factory use.	NA

Table 18. Register Name: config6 – Address: 0x06, Default: No RESET Value (Read Only)

Register Name	Address	Bit	Name	Function	Default Value
config6	0x06	15:8	tempdata(7:0)	This is the output from the chip temperature sensor. The value of this register in two's complement format represents the temperature in degrees Celsius. **This register must be read with a minimum SCLK period of 1µs.**	No RESET Value
		7:2	Reserved	Reserved for factory use.	000000
		1	Reserved	Reserved for factory use.	0
		0	Reserved	Reserved for factory use.	0

Copyright © 2011–2015, Texas Instruments Incorporated

Table 19. Register Name: config7 – Address: 0x07, Default: 0xFFFF

Register Name	Address	Bit	Name	Function		Default Value
config7	0x07	15:0	alarms_mask(15:0)	These bits control the masking of the alarms. (0=not masked, 1= masked)		0xFFFF
				alarm_mask	**Alarm that is Masked**	
				15	alarm_from_zerochk	
				14	not used	
				13	alarm_fifo_collision	
				12	alarm_fifo_1away	
				11	alarm_fifo_2away	
				10	alarm_dacclk_gone	
				9	alarm_dataclk_gone	
				8	alarm_output_gone	
				7	alarm_from_iotest	
				6	not used	
				5	alarm_from_pll	
				4	alarm_Aparity	
				3	alarm_Bparity	
				2	alarm_Cparity	
				1	alarm_Dparity	
				0	not used	

Table 20. Register Name: config8 – Address: 0x08, Default: 0x0000 (Causes Auto-Sync)

Register Name	Address	Bit	Name	Function	Default Value
config8	0x08	15	Reserved	Reserved for factory use.	0
		14	Reserved	Reserved for factory use.	0
		13	Reserved	Reserved for factory use.	0
		12:0	qmc_offsetA(12:0)	DACA offset correction. The offset is measured in DAC LSBs. **If enabled in *config30* writing to this register causes an auto-sync to be generated. This loads the values of the QMC offset registers *(config8-config9)* into the offset block at the same time. When updating the offset values for the AB channel *config8* should be written last. Programming *config9* will not affect the offset setting.**	All zeros

Table 21. Register Name: config9 – Address: 0x09, Default: 0x8000

Register Name	Address	Bit	Name	Function	Default Value
config9	0x09	15:13	fifo_offset(2:0)	When the sync to the FIFO occurs, this is the value loaded into the FIFO read pointer. With this value the initial difference between write and read pointers can be controlled. This may be helpful in syncing multiple chips or controlling the delay through the device.	100
		12:0	qmc_offsetB(12:0)	DACB offset correction. The offset is measured in DAC LSBs.	All zeros

Table 22. Register Name: config10 – Address: 0x0A, Default: 0x0000 (Causes Auto-Sync)

Register Name	Address	Bit	Name	Function	Default Value
config10	0x0A	15	Reserved	Reserved for factory use.	0
		14	Reserved	Reserved for factory use.	0
		13	Reserved	Reserved for factory use.	0
		12:0	qmc_offsetC(12:0)	DACC offset correction. The offset is measured in DAC LSBs. **If enabled in *config30* writing to this register causes an auto-sync to be generated. This loads the values of the CD-channel QMC offset registers *(config10-config11)* into the offset block at the same time. When updating the offset values for the CD-channel *config10* should be written last. Programming *config11* will not affect the offset setting.**	All zeros

Copyright © 2011–2015, Texas Instruments Incorporated

Table 23. Register Name: config11 – Address: 0x0B, Default: 0x0000

Register Name	Address	Bit	Name	Function	Default Value
config11	0x0B	15	Reserved	Reserved for factory use.	0
		14	Reserved	Reserved for factory use.	0
		13	Reserved	Reserved for factory use.	0
		12:0	qmc_offsetD(12:0)	DACD offset correction. The offset is measured in DAC LSBs.	All zeros

Table 24. Register Name: config12 – Address: 0x0C, Default: 0x0400

Register Name	Address	Bit	Name	Function	Default Value
config12	0x0C	15	Reserved	Reserved for factory use.	0
		14	Reserved	Reserved for factory use.	0
		13	Reserved	Reserved for factory use.	0
		12	Reserved	Reserved for factory use.	0
		11	Reserved	Reserved for factory use.	0
		10:0	qmc_gainA(10:0)	QMC gain for DACA. The full 11-bit qmc_gainA(10:0) word is formatted as UNSIGNED with a range of 0 to 1.9990. The implied decimal point for the multiplication is between bit 9 and bit 10.	10000000 000

Table 25. Register Name: config13 – Address: 0x0D, Default: 0x0400

Register Name	Address	Bit	Name	Function	Default Value
config13	0x0D	15	cmix_mode(3:0)	Sets the mixing function of the coarse mixer. Bit 15: Fs/8 mixer Bit 14: Fs/4 mixer Bit 13: Fs/2 mixer Bit 12: -Fs/4 mixer The various mixers can be combined together to obtain a ±n×Fs/8 total mixing factor.	0000
		11	Reserved	Reserved for factory use.	0
		10:0	qmc_gainB(10:0)	QMC gain for DACB. The full 11-bit qmc_gainB(10:0) word is formatted as UNSIGNED with a range of 0 to 1.9990. The implied decimal point for the multiplication is between bit 9 and bit 10.	10000000 000

Table 26. Register Name: config14 – Address: 0x0E, Default: 0x0400

Register Name	Address	Bit	Name	Function	Default Value
config14	0x0E	15	Reserved	Reserved for factory use.	0
		14	Reserved	Reserved for factory use.	0
		13	Reserved	Reserved for factory use.	0
		12	Reserved	Reserved for factory use.	0
		11	Reserved	Reserved for factory use.	0
		10:0	qmc_gainC(10:0)	QMC gain for DACC. The full 11-bit qmc_gainC(10:0) word is formatted as UNSIGNED with a range of 0 to 1.9990. The implied decimal point for the multiplication is between bit 9 and bit 10.	10000000 000

Table 27. Register Name: config15 – Address: 0x0F, Default: 0x0400

Register Name	Address	Bit	Name	Function	Default Value
config15	0x0F	15:14	output_ delayAB(1:0)	Delays the AB data path outputs from 0 to 3 DAC clock cycles.	00
		13:12	output_ delayCD(1:0)	Delays the CD data path outputs from 0 to 3 DAC clock cycles.	00
		11	Reserved	Reserved for factory use.	0
		10:0	qmc_gainD(10:0)	QMC gain for DACD. The full 11-bit qmc_gainD(10:0) word is formatted as UNSIGNED with a range of 0 to 1.9990. The implied decimal point for the multiplication is between bit 9 and bit 10.	10000000 000

Copyright © 2011–2015, Texas Instruments Incorporated

Table 28. Register Name: config16 – Address: 0x10, Default: 0x0000 (Causes Auto-Sync)

Register Name	Address	Bit	Name	Function	Default Value
config16	0x10	15	Reserved	Reserved for factory use.	0
		14	Reserved	Reserved for factory use.	0
		13	Reserved	Reserved for factory use.	0
		12	Reserved	Reserved for factory use.	0
		11:0	qmc_phaseAB(11:0)	QMC correction phase for the AB data path. The 12-bit qmc_phaseAB(11:0) word is formatted as two's complement and scaled to occupy a range of -0.5 to 0.49975 and a default phase correction of 0.00. To accomplish QMC phase correction, this value is multiplied by the current B sample, then summed into the A sample. **If enabled in *config30* writing to this register causes an auto-sync to be generated. This loads the values of the QMC offset registers *(config12, config13, and config16)* into the QMC block at the same time. When updating the QMC values for the AB channel *config16* should be written last. Programming *config12 and config13* will not affect the QMC settings.**	All zeros

Table 29. Register Name: config17 – Address: 0x11, Default: 0x0000 (Causes Auto-Sync)

Register Name	Address	Bit	Name	Function	Default Value
config17	0x11	15	Reserved	Reserved for factory use.	0
		14	Reserved	Reserved for factory use.	0
		13	Reserved	Reserved for factory use.	0
		12	Reserved	Reserved for factory use.	0
		11:0	qmc_phaseCD(11:0)	QMC correction phase for the CD data path. The 12-bit qmc_gainCD(11:0) word is formatted as two's complement and scaled to occupy a range of -0.5 to 0.49975 and a default phase correction of 0.00. To accomplish QMC phase correction, this value is multiplied by the current D sample, then summed into the C sample. **If enabled in *config30* writing to this register causes an auto-sync to be generated. This loads the values of the CD-channel QMC block registers *(config14, config15 and config17)* into the QMC block at the same time. When updating the QMC values for the CD-channel *config17* should be written last. Programming *config14 and config15* will not affect the QMC settings.**	All zeros

Table 30. Register Name: config18 – Address: 0x12, Default: 0x0000 (Causes Auto-Sync)

Register Name	Address	Bit	Name	Function	Default Value
config18	0x12	15:0	phase_offsetAB(15:0)	Phase offset added to the AB data path NCO accumulator before the generation of the SIN and COS values. The phase offset is added to the upper 16 bits of the NCO accumulator results and these 16 bits are used in the sin/cos lookup tables. **If enabled in *config31* writing to this register causes an auto-sync to be generated. This loads the values of the fine mixer block registers *(config18, config20, and config21)* at the same time. When updating the mixer values the *config18* should be written last. Programming *config20 and config21* will not affect the mixer settings.**	0x0000

Table 31. Register Name: config19 – Address: 0x13, Default: 0x0000 (Causes Auto-Sync)

Register Name	Address	Bit	Name	Function	Default Value
config19	0x13	15:0	phase_offsetCD(15:0)	Phase offset added to the CD data path NCO accumulator before the generation of the SIN and COS values. The phase offset is added to the upper 16 bits of the NCO accumulator results and these 16 bits are used in the sin/cos lookup tables. **If enabled in *config31* writing to this register causes an auto-sync to be generated. This loads the values of the CD-channel fine mixer block registers *(config19, config22, and config23)* at the same time. When updating the mixer values for the CD-channel *config19* should be written last. Programming *config22 and config23* will not affect the mixer settings.**	0x0000

Table 32. Register Name: config20 – Address: 0x14, Default: 0x0000

Register Name	Address	Bit	Name	Function	Default Value
config20	0x14	15:0	phase_ addAB(15:0)	The phase_addAB(15:0) value is used to determine the NCO frequency. The two's complement formatted value can be positive or negative. Each LSB represents Fs/(2^32) frequency step.	0x0000

Copyright © 2011–2015, Texas Instruments Incorporated

Table 33. Register Name: config21 – Address: 0x15, Default: 0x0000

Register Name	Address	Bit	Name	Function	Default Value
config21	0x15	15:0	phase_ addAB(31:16)	See *config20* above.	0x0000

Table 34. Register Name: config22 – Address: 0x16, Default: 0x0000

Register Name	Address	Bit	Name	Function	Default Value
config22	0x16	15:0	phase_ addCD(15:0)	The phase_addCD(15:0) value is used to determine the NCO frequency. The 2s-complement formatted value can be positive or negative. Each LSB represents Fs/(2^32) frequency step.	0x0000

Table 35. Register Name: config23 – Address: 0x17, Default: 0x0000

Register Name	Address	Bit	Name	Function	Default Value
config23	0x17	15:0	phase_ addCD(31:16)	See *config22* above.	0x0000

Table 36. Register Name: config24 – Address: 0x18, Default: NA

Register Name	Address	Bit	Name	Function	Default Value
config24	0x18	15:13	Reserved	Reserved for factory use.	001
		12	pll_reset	When set, the PLL loop filter (LPF) is pulled down to 0V. Toggle from 1b to 0b to restart the PLL if an over-speed lock-up occurs. Over-speed can happen when the process is fast, the supplies are higher than nominal, ... resulting in the feedback dividers missing a clock.	0
		11	pll_ndivsync_ena	When set, the LVDS SYNC input is used to sync the PLL N dividers.	1
		10	pll_ena	When set, the PLL is enabled. When cleared, the PLL is bypassed.	0
		9:8	Reserved	Reserved for factory use.	00
		7:6	pll_cp(1:0)	PLL pump charge select 00: No charge pump 01: Single pump charge 10: Not used 11: Dual pump charge	00
		5:3	pll_p(2:0)	PLL pre-scaler dividing module control. 010: 2 011: 3 100: 4 101: 5 110: 6 111: 7 000: 8	001
		2:0	pll_lfvolt(2:0)	PLL loop filter voltage. This three bit read-only indicator has step size of 0.4125 V. The entire range covers from 0 V to 3.3 V. The optimal lock range of the PLL will be from 010 to 101 (for example, 0.825 V to 2.063 V). Adjust pll_vco(5:0) for optimal lock range.	NA

Copyright © 2011–2015, Texas Instruments Incorporated

Table 37. Register Name: config25 – Address: 0x19, Default: 0x0440

Register Name	Address	Bit	Name	Function	Default Value
config25	0x19	15:8	pll_m(7:0)	M portion of the M/N divider of the PLL. If pll_m<7> = 0, the M divider value has the range of pll_m<6:0>, spanning from 4 to 127. (for example, 0, 1, 2, and 3 are not valid.) If pll_m<7> = 1, the M divider value has the range of 2 × pll_m<6:0>, spanning from 8 to 254. (for example, 0, 2, 4, and 6 are not valid. M divider has even values only.)	0x04
		7:4	pll_n(3:0)	N portion of the M/N divider of the PLL. 0000: 1 0001: 2 0010: 3 0011: 4 0100: 5 0101: 6 0110: 7 0111: 8 1000: 9 1001: 10 1010: 11 1011: 12 1100: 13 1101: 14 1110: 15 1111: 16	0100
		3:2	pll_vcoitune(1:0)	PLL VCO bias tuning bits. Set to 01b for normal PLL operation	00
		1:0	Reserved	Reserved for factory use.	00

Table 38. Register Name: config26 – Address: 0x1A, Default: 0x0020

Register Name	Address	Bit	Name	Function	Default Value
config26	0x1A	15:10	pll_vco(5:0)	VCO frequency coarse tuning bits.	000000
		9	Reserved	Reserved for factory use.	0
		8	Reserved	Reserved for factory use.	0
		7	bias_sleep	When set, the bias amplifier is put into sleep mode.	0
		6	tsense_sleep	Turns off the temperature sensor when asserted.	0
		5	pll_sleep	When set, the PLL is put into sleep mode.	1
		4	clkrecv_sleep	When asserted the clock input receiver gets put into sleep mode. This affects the OSTR receiver as well.	0
		3	sleepA	When set, the DACA is put into sleep mode.	0
		2	sleepB	When set, the DACB is put into sleep mode.	0
		1	sleepC	When set, the DACC is put into sleep mode.	0
		0	sleepD	When set, the DACD is put into sleep mode.	0

Copyright © 2011–2015, Texas Instruments Incorporated

Table 39. Register Name: config27 – Address: 0x1B, Default: 0x0000

Register Name	Address	Bit	Name	Function	Default Value
config27	0x1B	15	extref_ena	Allows the device to use an external reference or the internal reference. 0: Internal reference 1: External reference	0
		14	Reserved	Reserved for factory use.	0
		13	Reserved	Reserved for factory use.	0
		12	Reserved	Reserved for factory use.	0
		11	fuse_sleep	Put the fuses to sleep when set high. **Note: Default value is 0b. Must be set to 1b for proper operation**	0
		10	Reserved	Reserved for factory use.	0
		9	Reserved	Reserved for factory use.	0
		8	Reserved	Reserved for factory use.	0
		7	Reserved	Reserved for factory use.	0
		6	Reserved	Reserved for factory use.	0
		5:0	atest	ATEST mode allows the user to check for the internal die voltages to ensure the supply voltages are within the range. When ATEST mode is programmed, the internal die voltages can be measured at the TXENA pin. The TXENA pin (N9) must be floating without any pull-up or pull-down resistors. In ATEST mode, the TXENA and sif_txenable logics are bypassed, and output will be active at all time.	000000

Config27, bit<5:0>	Description	Expected Nominal Voltage
001110	DACA AVSS	0 V
001111	DACA DVDD	1.2 V
010000	DACA AVDD	3.3 V
010110	DACB AVSS	0 V
010111	DACB DVDD	1.2 V
011000	DACB AVDD	3.3 V
011110	DACC AVSS	0 V
011111	DACC DVDD	1.2 V
100000	DACC AVDD	3.3 V
100110	DACD AVSS	0 V
100111	DACD DVDD	1.2 V
101000	DACD AVDD	3.3 V
110000	1.2VDIG	1.2 V
000101	1.2VCLK	1.2 V

Table 40. Register Name: config28 – Address: 0x1C, Default: 0x0000

Register Name	Address	Bit	Name	Function	Default Value
config28	0x1C	15:8	Reserved	Reserved for factory use.	0x00
		7:0	Reserved	Reserved for factory use.	0x00

Table 41. Register Name: config29 – Address: 0x1D, Default: 0x0000

Register Name	Address	Bit	Name	Function	Default Value
config29	0x1D	15:8	Reserved	Reserved for factory use.	0x00
		7:0	Reserved	Reserved for factory use.	0x00

Copyright © 2011–2015, Texas Instruments Incorporated

Table 42. Register Name: config30 – Address: 0x1E, Default: 0x1111

Register Name	Address	Bit	Name	Function	Default Value
config30	0x1E	15:12	syncsel_qmoffsetAB(3:0)	Selects the syncing source(s) of the AB data path double buffered QMC offset registers. A 1b in the bit enables the signal as a sync source. More than one sync source is permitted. Bit 15: sif_sync (via *config31*) Bit 14: SYNC Bit 13: OSTR Bit 12: Auto-sync from register write	0001
		11:8	syncsel_qmoffsetCD(3:0)	Selects the syncing source(s) of the CD data path double buffered QMC offset registers. A 1b in the bit enables the signal as a sync source. More than one sync source is permitted. Bit 11: sif_sync (via *config31*) Bit 10: SYNC Bit 9: OSTR Bit 8: Auto-sync from register write	0001
		7:4	syncsel_qmcorrAB(3:0)	Selects the syncing source(s) of the AB data path double buffered QMC offset registers. A 1b in the bit enables the signal as a sync source. More than one sync source is permitted. Bit 7: sif_sync (via *config31*) Bit 6: SYNC Bit 5: OSTR Bit 4: Auto-sync from register write	0001
		3:0	syncsel_qmcorrCD(3:0)	Selects the syncing source(s) of the CD data path double buffered QMC offset registers. A 1b in the bit enables the signal as a sync source. More than one sync source is permitted. Bit 3: sif_sync (via *config31*) Bit 2: SYNC Bit 1: OSTR Bit 0: Auto-sync from register write	0001

Table 43. Register Name: config31 – Address: 0x1F, Default: 0x1140

Register Name	Address	Bit	Name	Function	Default Value
config31	0x1F	15:12	syncsel_mixerAB(3:0)	Selects the syncing source(s) of the AB data path double buffered mixer registers. A 1b in the bit enables the signal as a sync source. More than one sync source is permitted. Bit 15: sif_sync (via *config31*) Bit 14: SYNC Bit 13: OSTR Bit 12: Auto-sync from register write	0001
		11:8	syncsel_mixerCD(3:0)	Selects the syncing source(s) of the CD data path double buffered mixer registers. A 1b in the bit enables the signal as a sync source. More than one sync source is permitted. Bit 11: sif_sync (via *config31*) Bit 10: SYNC Bit 9: OSTR Bit 8: Auto-sync from register write	0001
		7:4	syncsel_nco(3:0)	Selects the syncing source(s) of the two NCO accumulators. A 1b in the bit enables the signal as a sync source. More than one sync source is permitted. Bit 7: sif_sync (via *config31*) Bit 6: SYNC Bit 5: OSTR Bit 4: ISTR	0100
		3:2	syncsel_fifo_input	Selects either ISTR or SYNC LVDS signal to be routed to the internal FIFO_ISTR path if *syncsel_fifoin(3:0)* is set to be ISTR (for example, *syncsel_fifoin(3:0)* = 0010b). In conjunction with config1 register bit(8), this allows flexibility of external LVDS signal routing to the internal FIFO. The *syncsel_fifo_input(1:0)* can only have one bit active at a time. 00: external LVDS ISTR signal to internal FIFO_ISTR path 01: external LVDS SYNC signal to internal FIFO_ISTR path 10: external LVDS ISTR signal to internal FIFO_ISTR path 11: external LVDS SYNC signal to internal FIFO_ISTR path	00
		1	sif_sync	SIF created sync signal. Set to 1b to cause a sync and then clear to 0b to remove it.	0
		0	Reserved	Reserved for factory use.	0

Copyright © 2011–2015, Texas Instruments Incorporated

Table 44. Register Name: config32 – Address: 0x20, Default: 0x2400

Register Name	Address	Bit	Name	Function	Default Value
config32	0x20	15:12	syncsel_fifoin(3:0)	Selects the syncing source(s) of the FIFO input side. A 1b in the bit enables the signal as a sync source. More than one sync source is permitted. Bit 15: sif_sync (via *config31*) Bit 14: Always zero Bit 13: ISTR Bit 12: SYNC	0010
		11:8	syncsel_fifoout(3:0)	Selects the syncing source(s) of the FIFO output side. A 1b in the bit enables the signal as a sync source. More than one sync source is permitted. clkdiv_sync_ena must be set to 1b for the FIFO output pointer sync to occur. Bit 11: sif_sync (via *config31*) Bit 10: OSTR – Dual Sync Sources Mode Bit 9: ISTR – Single Sync Source mode Bit 8: SYNC – Single Sync Source mode	0100
		7:1	Reserved	Reserved for factory use.	0000
		0	clkdiv_sync_sel	Selects the signal source for clock divider synchronization.	0
				clkdiv_sync_sel / **Sync Source**	
				0 / OSTR	
				1 / ISTR, SYNC, or SIF SYNC, based on syncsel_fifoin source selection (config32, bit<15:12>)	

Table 45. Register Name: config33 – Address: 0x21, Default: 0x0000

Register Name	Address	Bit	Name	Function	Default Value
config33	0x21	15:0	Reserved	Reserved for factory use.	0x0000

Table 46. Register Name: config34 – Address: 0x22, Default: 0x1B1B

Register Name	Address	Bit	Name	Function	Default Value
config34	0x22	15:14	pathA_in_sel(1:0)	Selects the word used for the A channel path.	00
		13:12	pathB_in_sel(1:0)	Selects the word used for the B channel path.	01
		11:10	pathC_in_sel(1:0)	Selects the word used for the C channel path.	10
		9:8	pathD_in_sel(1:0)	Selects the word used for the D channel path.	11
		7:6	DACA_out_sel(1:0)	Selects the word used for the DACA output.	00
		5:4	DACB_out_sel(1:0)	Selects the word used for the DACB output.	01
		3:2	DACC_out_sel(1:0)	Selects the word used for the DACC output.	10
		1:0	DACD_out_sel(1:0)	Selects the word used for the DACD output.	11

Copyright © 2011–2015, Texas Instruments Incorporated

Table 47. Register Name: config35 – Address: 0x23, Default: 0xFFFF

Register Name	Address	Bit	Name	Function		Default Value
config35	0x23	15:0	sleep_cntl(15:0)	Controls the routing of the CMOS SLEEP signal (pin N11) to different blocks. When a bit in this register is set, the SLEEP signal will be sent to the corresponding block. The block will only be disabled when the SLEEP is logic HIGH and the correspond bit is set to "1". These bits do not override SIF bits in config26 that control the same sleep function.		0xFFFF
				sleep_cntl(bit)	**Function**	
				15	DACA sleep	
				14	DACB sleep	
				13	DACC sleep	
				12	DACD sleep	
				11	Clock receiver sleep	
				10	PLL sleep	
				9	LVDS data sleep	
				8	LVDS control sleep	
				7	Temp sensor sleep	
				6	reserved	
				5	Bias amplifier sleep	
				All others	not used	

Table 48. Register Name: config36 – Address: 0x24, Default: 0x0000

Register Name	Address	Bit	Name	Function	Default Value
config36	0x24	15:13	datadly(2:0)	Controls the delay of the data inputs through the LVDS receivers. Each LSB adds approximately 50 ps 0: Minimum	000
		12:10	clkdly(2:0)	Controls the delay of the data clock through the LVDS receivers. Each LSB adds approximately 50 ps 0: Minimum	000
		9:0	Reserved	Reserved for factory use.	0x000

Table 49. Register Name: config37 – Address: 0x25, Default: 0x7A7A

Register Name	Address	Bit	Name	Function	Default Value
config37	0x25	15:0	iotest_pattern0	Dataword0 in the IO test pattern. It is used with the seven other words to test the input data. At the start of the IO test pattern, this word should be aligned with rising edge of ISTR or SYNC signal to indicate sample 0.	0x7A7A

Table 50. Register Name: config38 – Address: 0x26, Default: 0xB6B6

Register Name	Address	Bit	Name	Function	Default Value
config38	0x26	15:0	iotest_pattern1	Dataword1 in the IO test pattern. It is used with the seven other words to test the input data.	0xB6B6

Table 51. Register Name: config39 – Address: 0x27, Default: 0xEAEA

Register Name	Address	Bit	Name	Function	Default Value
config39	0x27	15:0	iotest_pattern2	Dataword2 in the IO test pattern. It is used with the seven other words to test the input data.	0xEAEA

Table 52. Register Name: config40 – Address: 0x28, Default: 0x4545

Register Name	Address	Bit	Name	Function	Default Value
config40	0x28	15:0	iotest_pattern3	Dataword3 in the IO test pattern. It is used with the seven other words to test the input data.	0x4545

Copyright © 2011–2015, Texas Instruments Incorporated

Table 53. Register Name: config41 – Address: 0x29, Default: 0x1A1A

Register Name	Address	Bit	Name	Function	Default Value
config41	0x29	15:0	iotest_pattern4	Dataword4 in the IO test pattern. It is used with the seven other words to test the input data.	0x1A1A

Table 54. Register Name: config42 – Address: 0x2A, Default: 0x1616

Register Name	Address	Bit	Name	Function	Default Value
config42	0x2A	15:0	iotest_pattern5	Dataword5 in the IO test pattern. It is used with the seven other words to test the input data.	0x1616

Table 55. Register Name: config43 – Address: 0x2B, Default: 0xAAAA

Register Name	Address	Bit	Name	Function	Default Value
config43	0x2B	15:0	iotest_pattern6	Dataword6 in the IO test pattern. It is used with the seven other words to test the input data.	0xAAAA

Table 56. Register Name: config44 – Address: 0x2C, Default: 0xC6C6

Register Name	Address	Bit	Name	Function	Default Value
config44	0x2C	15:0	iotest_pattern7	Dataword7 in the IO test pattern. It is used with the seven other words to test the input data.	0xC6C6

Table 57. Register Name: config45 – Address: 0x2D, Default: 0x0004

Register Name	Address	Bit	Name	Function	Default Value
config45	0x2D	15	Reserved	Reserved for factory use.	0
		14	ostrtodig_sel	When set, the OSTR signal is passed directly to the digital block. This is the signal that is used to clock the dividers.	0
		13	ramp_ena	When set, a ramp signal is inserted in the input data at the FIFO input.	0
		12:1	Reserved	Reserved for factory use.	0000 0000 0010
		0	sifdac_ena	When set, the DAC output is set to the value in *sifdac(15:0)* in register *config48*.	0

Table 58. Register Name: config46 – Address: 0x2E, Default: 0x0000

Register Name	Address	Bit	Name	Function	Default Value
config46	0x2E	15:8	grp_delaya(7:0)	Sets the group delay function for DACA. The maximum delay ranges from 30 ps to 100 ps and is dependent on DAC sample clock. Contact TI for specific application information.	0x00
		7:0	grp_delayB(7:0)	Sets the group delay function for DACB. The maximum delay ranges from 30 ps to 100 ps and is dependent on DAC sample clock. Contact TI for specific application information.	0x00

Table 59. Register Name: config47 – Address: 0x2F, Default: 0x0000

Register Name	Address	Bit	Name	Function	Default Value
config47	0x2F	15:8	grp_delayC(7:0)	Sets the group delay function for DACC. The maximum delay ranges from 30 ps to 100 ps and is dependent on DAC sample clock. Contact TI for specific application information.	0x00
		7:0	grp_delayD(7:0)	Sets the group delay function for DACD. The maximum delay ranges from 30 ps to 100 ps and is dependent on DAC sample clock. Contact TI for specific application information.	0x00

Copyright © 2011–2015, Texas Instruments Incorporated

Table 60. Register Name: config48 – Address: 0x30, Default: 0x0000

Register Name	Address	Bit	Name	Function	Default Value
config48	0x30	15:0	sifdac(15:0)	Value sent to the DACs when *sifdac_ena* is asserted. DATACLK must be running to latch this value into the DACs. The format would be based on twos in register *config2*.	0x0000

Table 61. Register Name: Version– Address: 0x7F, Default: 0x5409 (Read Only)

Register Name	Address	Bit	Name	Function	Default Value
version	0x7F	15:10	Reserved	Reserved for factory use.	010101
		9	Reserved	Reserved for factory use.	0
		8:7	Reserved	Reserved for factory use.	00
		6:5	Reserved	Reserved for factory use.	00
		4:3	deviceid(1:0)	Returns 01b for DAC34H84.	01
		2:0	versionid(2:0)	A hardwired register that contains the version of the chip.	001

Copyright © 2011–2015, Texas Instruments Incorporated

8 Application and Implementation

NOTE

Information in the following applications sections is not part of the TI component specification, and TI does not warrant its accuracy or completeness. TI's customers are responsible for determining suitability of components for their purposes. Customers should validate and test their design implementation to confirm system functionality.

8.1 Application Information

The DAC34H84 is a quad 16-bit DAC with max input data rate of up to 625 MSPS per DAC and max DAC update rate of 1.25 GSPS after the final, selectable interpolation stages. With build-in interpolation filter of 2x, 4x, 8x, and 16x options, the lower input data rate can be interpolated all the way to 1.25 GSPS. This allows the DAC to update the samples at higher rate, and pushes the DAC images further away to relax anti-image filer specification due to the increased Nyquist bandwidth. With integrated coarse and fine mixers, baseband signal can be upconverted to an intermediate frequency (IF) signal between the baseband processor and post-DAC analog signal chains.

The DAC can output baseband or IF when connected to post-DAC analog signals chain components such as transformers or IF amplifiers. When used in conjunction with TI RF quadrature modulator such as the TRF3705, the DAC and RF modulator can function as a set of baseband or IF upconverter. With integrated QMC circuits, the LO offset and the sideband artifacts can be properly corrected in the direct up-conversion applications. The DAC34H84 provides the bandwidth, performance, small footprint, and lower power consumption needed for multi-mode 2G/3G/4G cellular base stations to migrate to more advanced technologies, such as LTE-Advanced and carrier aggregation on multiple antennas.

Copyright © 2011–2015, Texas Instruments Incorporated

8.2 Typical Applications

8.2.1 IF Based LTE Transmitter

Figure 88 shows an example block diagram for a direct conversion radio. The design requires a single carrier, 20-MHz LTE signal. The system has digital-predication (DPD) to correct up to 5th order distortion so the total DAC output bandwidth is 100 MHz. Interpolation is used to output the signal at highest sampling rate possible to simplify the analog filter requirements and move high order harmonics out of band (due to wider Nyquist zone). The internal PLL is used to generate the final DAC output clock from a reference clock of 491.52 MHz.

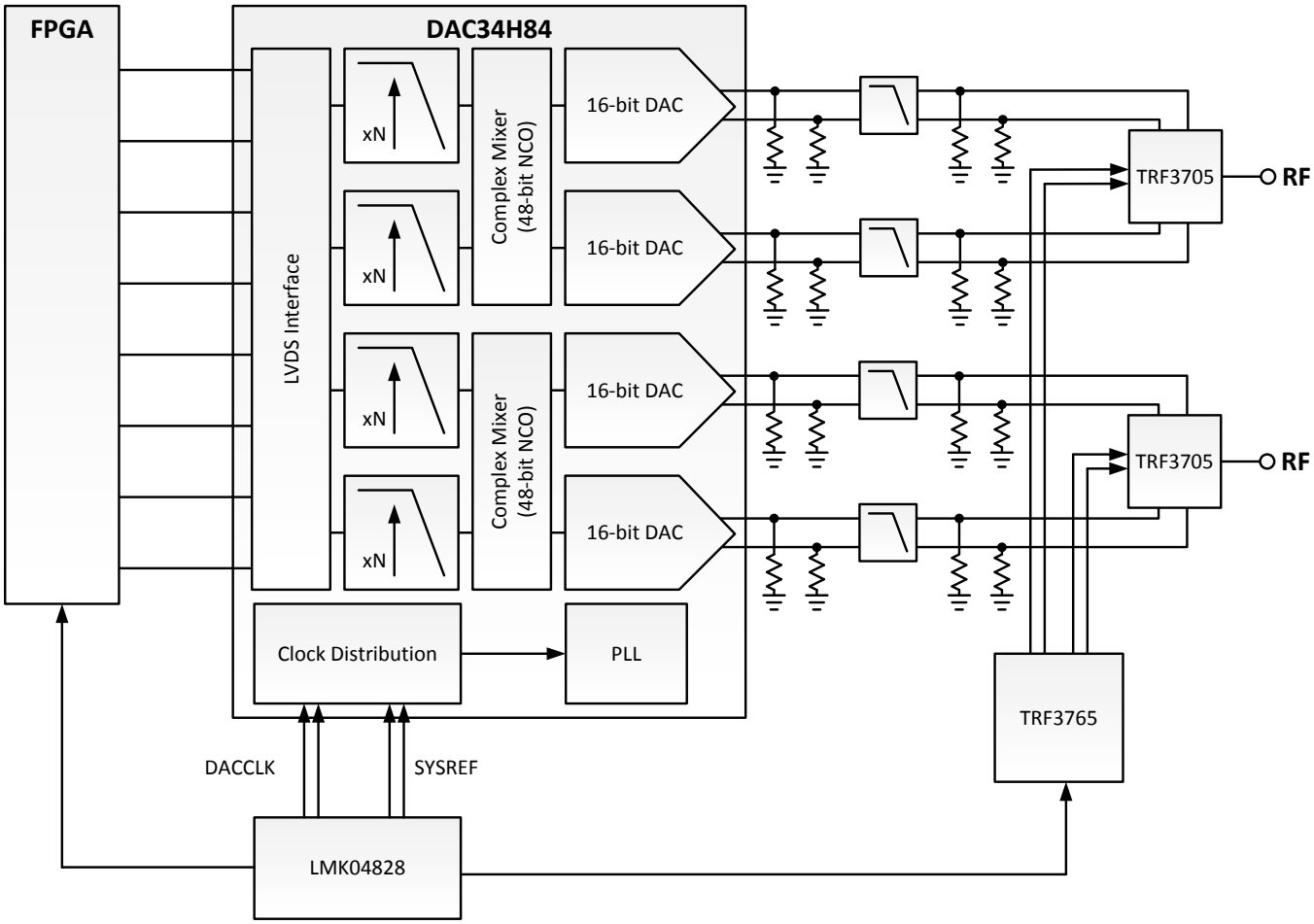

Figure 88. Dual Low-IF Wideband LTE Transmitter Diagram

8.2.1.1 Design Requirements

For this design example, use the parameters listed in Table 62 as the input parameters.

Table 62. Design Parameters

DESIGN PARAMETER	EXAMPLE VALUE
Signal Bandwidth (BW_{signal})	20 MHz
Total DAC Output Bandwidth (BW_{total})	100 MHz
DAC PLL	On
DAC PLL Reference Frequency	491.52 MHz
Maximum FPGA LVDS Rate	491.52 Mbps

Copyright © 2011–2015, Texas Instruments Incorporated

8.2.1.2 Detailed Design Procedure

8.2.1.2.1 Data Input Rate

Nyquist theory states that the data rate must be at least two times the highest signal frequency. The data will be sent to the DAC as complex baseband data. Due to the quadrature nature of the signal, each in-phase (I component) and quadrature (Q component) need to have 50 MHz of bandwidth to construct 100 MHz of complex bandwidth. Since the interpolation filter design is not the ideal half-band filter design with infinite roll-off at FDATA/2 (refer to FIR Filters section for more detail), the filter limits the useable input bandwidth to about 40 percent of FDATA. Therefore, the minimum data input rate is 125 MSPS. Since the standard telecom data rate is typically multiples of 30.72 MSPS, the DAC input data rate is chosen to be eight times of 30.72 MSPS, which is 245.76 MSPS.

8.2.1.2.2 Interpolation

It is desired to use the highest DAC output rate as possible to move the DAC images further from the signal of interest to ease analog filter requirement. The DAC output rate must be greater than two times the highest output frequency of 200 MHz, which is greater than 400 MHz. Table 63 shows the possible DAC output rates based on the data input rate and available interpolation settings. The DAC image frequency is also listed.

Table 63. Interpolation

F_{DATA}	INTERPOLATION	F_{DAC}	POSSIBLE?	LOWEST IMAGE FREQUENCY	DISTANCE FROM BAND OF INTEREST
245.76 MSPS	1	245.76 MSPS	No	N/A	N/A
245.76 MSPS	2	491.52 MSPS	Yes	318.64 MHz	145.76 MHz
245.76 MSPS	4	983.04 MSPS	Yes	810.16 MHz	637.28 MHz
245.76 MSPS	8	1966.08 MSPS	No	N/A	N/A
245.76 MSPS	16	3932.16 MSPS	No	N/A	N/A

8.2.1.2.3 LO Feedthrough and Sideband Correction

For typical IF based systems, the IF location is selected such that the image location and the LO feedthrough location is far from the signal location. The minimum distance is based on the bandpass filter roll-off and attenuation level at the LO feedthrough and image location. If sufficient attenuation level of these two artifacts meets the system requirement, then further digital cancellation of these artifacts may not be needed.

Although the I/Q modulation process will inherently reduce the level of the RF sideband signal, an IF based transmitter without sufficient RF image rejection capabilities or an zero-IF based system (detail in the next section) will likely need additional sideband suppression to maximize performance. Further, any mixing process will result in some feedthrough of the LO source. The DAC34H84 has build-in digital features to cancel both the LO feedthrough and sideband signal. The LO feedthrough is corrected by adding a DC offset to the DAC outputs until the LO feedthrough power is suppressed. The sideband suppression can be improved by correcting the gain and phase differences between the I and Q analog outputs through the digital QMC block. Besides gain and phase differences between the I and Q analog outputs, group delay differences may also be present in the signal path and are typically contributed by group delay variations of post DAC image reject analog filters and PCB trace variations. Since delay in time translates to higher order linear phase variation, the sideband of a wideband system may not be completely suppressed by typical digital QMC block. The DAC34H84 has integrated group delay correction feature to provide delay adjustments. (The maximum group delay correction ranges from 30 ps to 100 ps and is dependent on DAC sample clock. Contact TI for specific application information.) Moreover, system designer may implement additional linear group delay compensation in the host processor to the DAC to perform higher order sideband suppression.

Copyright © 2011–2015, Texas Instruments Incorporated

8.2.1.3 Application Curves

The ACPR performance for LTE 20 MHz TM1.1 are shown in Figure 89, Figure 90, Figure 90, and Figure 90. The figures provide comparisons between two major LTE bands such as 2.14 GHz and 2.655 GHz, and also comparisons between two different DAC clocking options such as DAC on-chip PLL mode and external clocking mode.

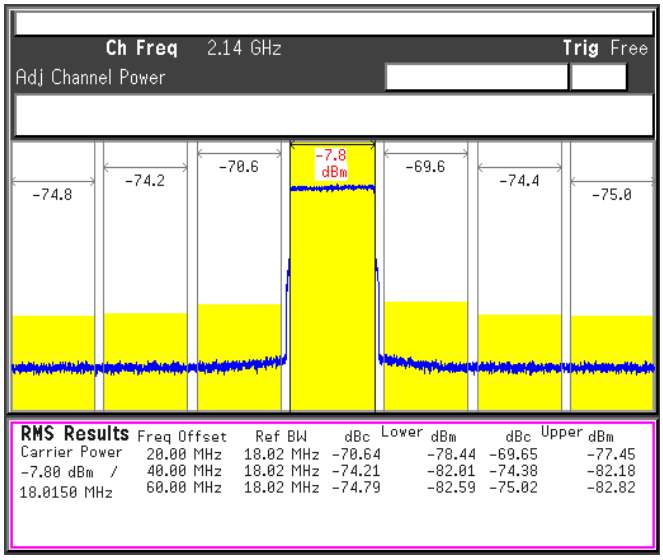

DAC Output IF = 122.88 MHz, LO = 2017.12 MHz, DAC Clock = External Clock Source from LMK04806

Figure 89. 20MHz TM1.1 LTE Carrier at 2.14GHz

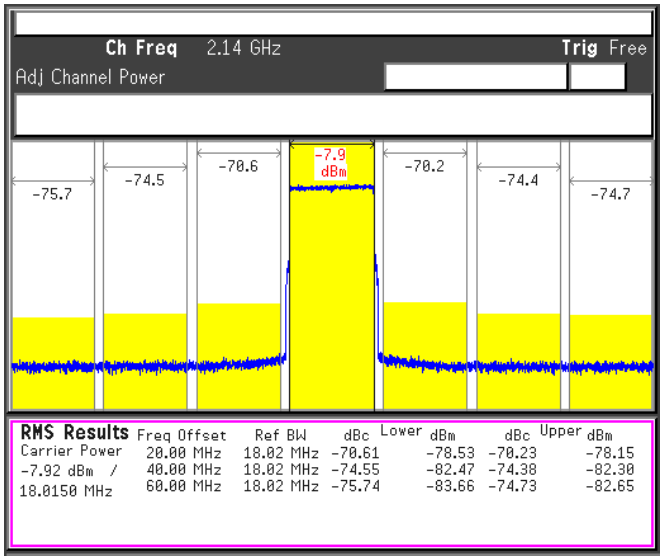

DAC Output IF = 122.88 MHz, LO = 2017.12 MHz, DAC Clock = DAC34H84 On-Chip PLL

Figure 90. 20MHz TM1.1 LTE Carrier at 2.14GHz

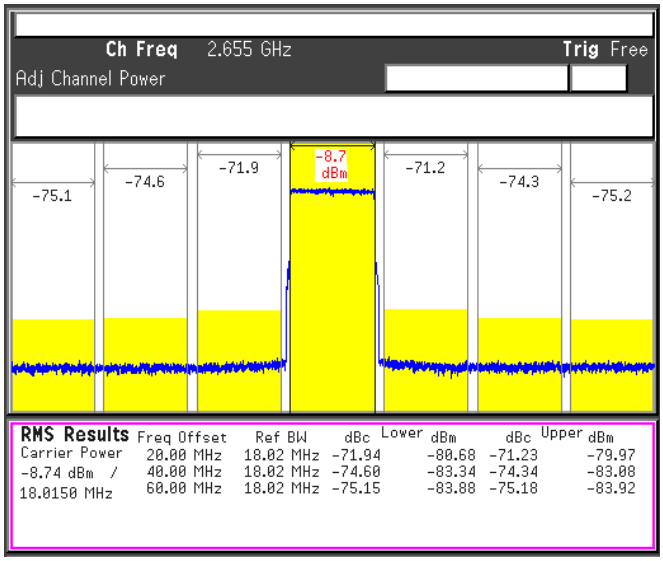

DAC Output IF = 122.88 MHz, LO = 2532.12 MHz, DAC Clock = External Clock Source from LMK04806

Figure 91. 20MHz TM1.1 LTE Carrier at 2.655GHz

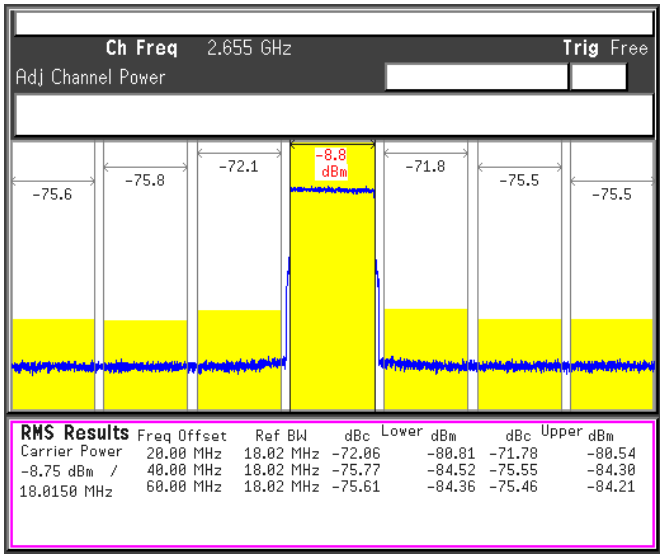

DAC Output IF = 122.88 MHz, LO = 2532.12 MHz, DAC Clock = DAC34H84 On-Chip PLL

Figure 92. 20MHz TM1.1 LTE Carrier at 2.655GHz

Copyright © 2011–2015, Texas Instruments Incorporated

8.2.2 Direct Upconversion (Zero IF) LTE Transmitter

Figure 88 shows an example block diagram for a direct conversion radio. The design specification requires that the desired output bandwidth is 100MHz, which could be, for instance, a typical LTE signal. The system has DPD to correct up to 5th order distortion so the total DAC output bandwidth is 500 MHz. Interpolation is used to output the signal at the highest sampling rate possible to simplify the analog filtering requirements and move high order harmonics out of band (due to wider Nyquist zone). The DAC sampling clock is provided by high quality clock synthesizer such as the LMK0480x family.

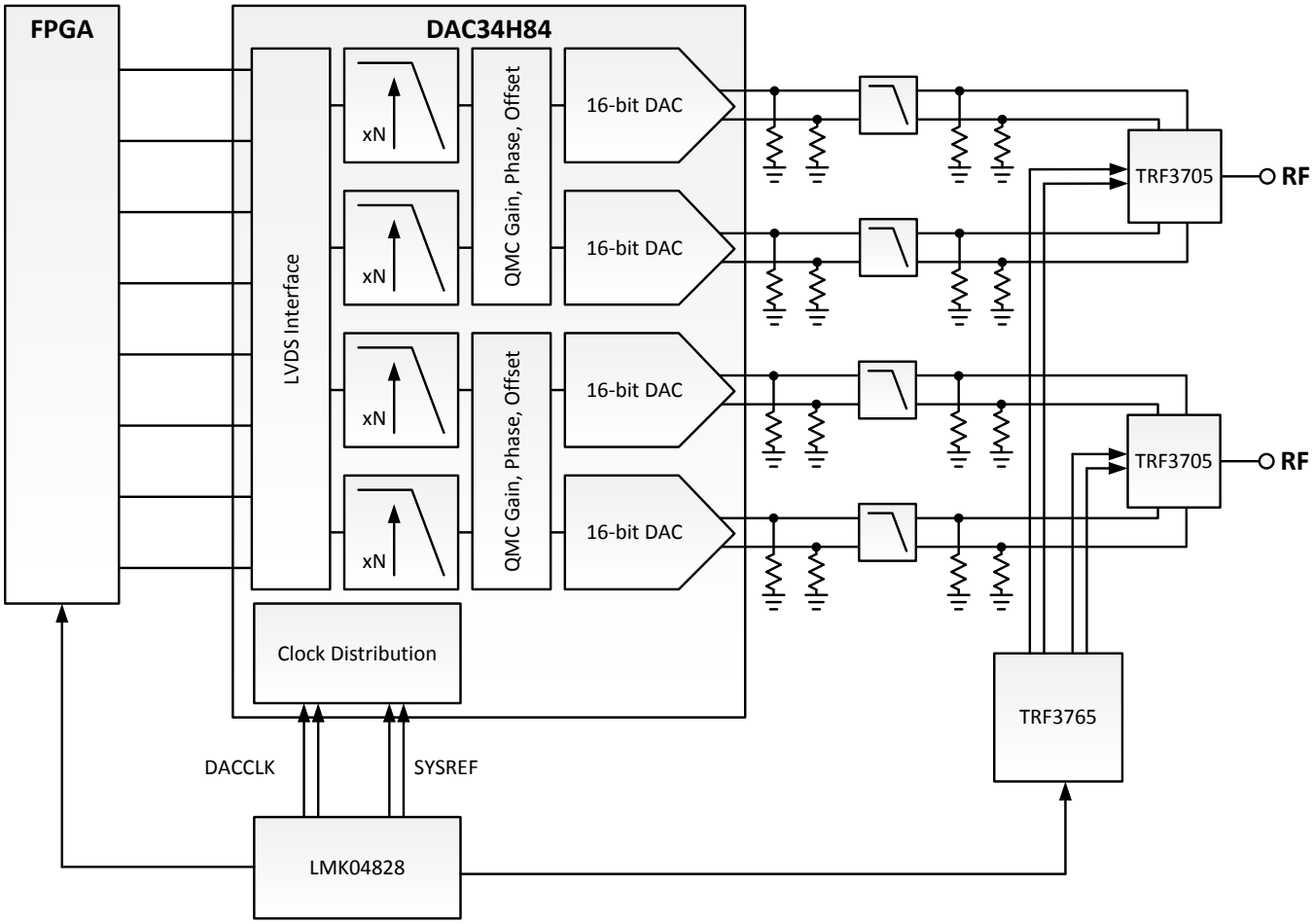

Figure 93. Zero LTE Transmitter Diagram

8.2.2.1 Design Requirements

For this design example, use the parameters listed in Table 64 as the input parameters.

Table 64. Design Parameters

DESIGN PARAMETER	EXAMPLE VALUE
Signal Bandwidth (BW_{signal})	100 MHz
Total DAC Output Bandwidth (BW_{total})	500 MHz
DAC PLL	Off
Maximum FPGA LVDS Rate	1228.8 Mbps

Copyright © 2011–2015, Texas Instruments Incorporated

8.2.2.2 Detailed Design Procedure

8.2.2.2.1 Data Input Rate

Nyquist theory states that the data rate must be at least two times the highest signal frequency. The data will be sent to the DAC as complex baseband data. Due to the quadrature nature of the signal, each in-phase (I component) and quadrature (Q component) need to have 250 MHz of bandwidth to construct 500 MHz of complex bandwidth. Since the interpolation filter design is not the ideal half-band filter design with infinite roll-off at FDATA/2 (refer to *FIR Filters* section for more detail), the filter limits the useable input bandwidth to about 44 percent of FDATA with less than 0.1dB of FIR filter roll-off. Therefore, the minimum data input rate is 568 MSPS. Since the standard telecom data rate is typically multiples of 30.72 MSPS, the DAC input data rate is chosen to be 20 times of 30.72 MSPS, which is 614.4 MSPS.

8.2.2.2.2 Interpolation

It is desired to use the highest DAC output rate as possible to move the DAC images further from the signal of interest to ease analog filter requirement. The DAC output rate must be greater than two times the highest output frequency of 250 MHz, which is greater than 500 MHz. The table below shows the possible DAC output rates based on the data input rate and available interpolation settings. The DAC image frequency is also listed.

Table 65. Interpolation

F_{DATA}	INTERPOLATION	F_{DAC}	POSSIBLE?	LOWEST IMAGE FREQUENCY	DISTANCE FROM BAND OF INTEREST
614.4 MSPS	1	614.4 MSPS	Yes	364.4 MHz	114.4 MHz
614.4 MSPS	2	1228.8 MSPS	Yes	978.8 MHz	728.8 MHz
614.4 MSPS	4	2457.6 MSPS	No	N/A	N/A
614.4 MSPS	8	4915.2 MSPS	No	N/A	N/A
614.4 MSPS	16	9830.4 MSPS	No	N/A	N/A

8.2.2.2.3 LO Feedthrough and Sideband Correction

Refer to *LO Feedthrough and Sideband Correction* section of IF based LTE Transmitter design.

Copyright © 2011–2015, Texas Instruments Incorporated

8.2.2.3 Application Curves

The ACPR performance for LTE 20MHz TM1.1 are shown in Figure 94 and Figure 95. The figures provide comparisons between two major LTE bands such as 2.14 GHz and 2.655 GHz with DAC clocking option set to external clocking mode.

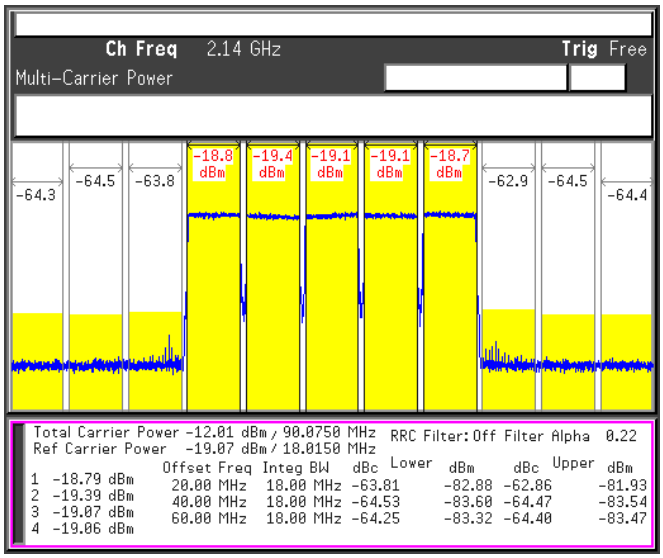

DAC Output IF = 0 MHz, LO = 2140 MHz, DAC Clock = External Clock Source from LMK04806

Figure 94. 5x20MHz TM1.1 LTE Carrier at 2.14GHz

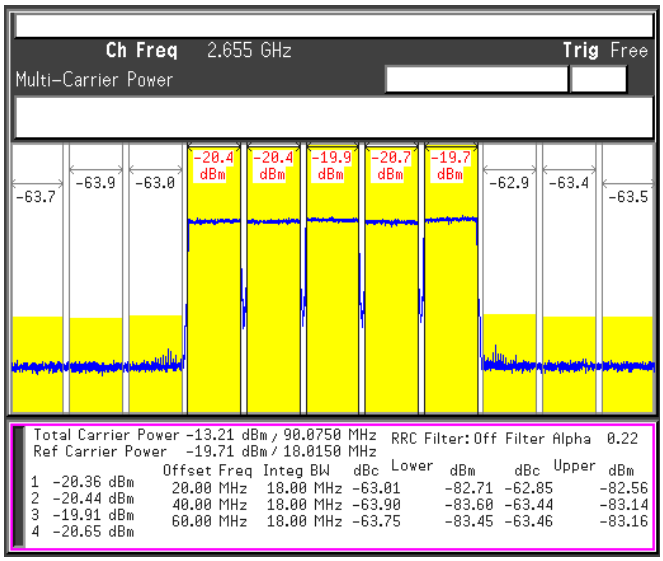

DAC Output IF = 0 MHz, LO = 2655 MHz, DAC Clock = External Clock Source from LMK04806

Figure 95. 5x20MHz TM1.1 LTE Carrier at 2.655GHz

9 Power Supply Recommendations

As shown in Figure 96, the DAC34H84 device has various power rails and has two primary voltages of 1.2 V and 3.3 V. Some of the DAC power rails such as CLKVDD and AVDD are more noise sensitive than other rails because they are mainly powering the switch drivers for the current switch array and the current bias circuits, respectively. These circuits are the main analog DAC core. Any power supply noises such as switching power supply ripple may be modulated directly onto the signal of interest. These two power rails should be powered by low noise power supplies such as LDO. Powering the rail directly with switching power supplies is not recommended for these two rails.

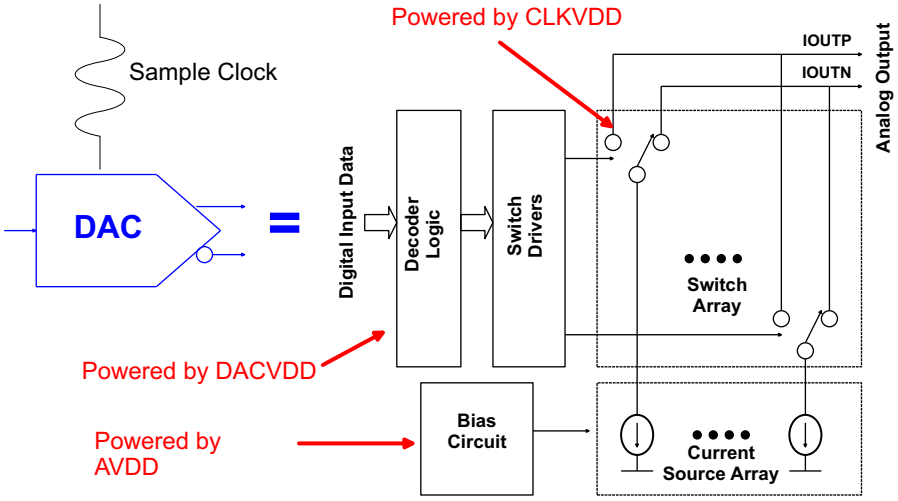

Figure 96. Interpolation Filters, NCOs, and QMC Blocks Powered by DIGVDD

With the DAC34H84 being a mixed signal device, the device contains circuits that bridges the digital section and the analog section. The DACVDD powers these sections. System designer can design this rail in secondary priority. Powering the rail with LDO is recommended. Unless system designer pays special care to supply filtering and power supply routing/placement, powering the rail directly with switching power supplies is not recommended for this rail.

Since digital circuits have more inherent noise immunity than analog circuits, the power supply noise requirements for DIGVDD of the digital section of the device may be relaxed and placed at a lower priority. Depending on the spur level requirement, routing and placement of the power supply, power the rail directly with switching power supplies can be possible. With the digital logics running, the DIGVDD rail may draw significant current. If the power supply traces and filtering network have significant DC resistance loss (for example, DCR), then the final supply voltage seen by the DIGVDD rail may not be sufficient to meet the minimum power supply level. For instance, with 450 mA of DIGVDD current and about 0.1 Ω of DCR from the ferrite bead, the final supply voltage at the DIGVDD pins may be 1.2 V – 0.045 V = 1.155 V. This is fairly close to the minimum supply voltage range of 1.14 V. System designer may need to elevate the power supply voltage according to the DCR level or design a feedback network for the power supply to account for associated voltage drop. To ensure power supply accuracy and to account for power supply filter network loss at operating conditions, the use of the ATEST function in register config27 to check the internal power supply nodes is recommended.

The table below is a summary of the various power supply nodes of the DAC. Care should be taken to keep clean power supplies routing away from noisy digital supplies. It is recommended to use at least two power layers. Power supplies for digital circuits tend to have more switching activities and are typically noisier, and system designer should avoid sharing the digital power rail (for example, power supplies for FPGA or DIGVDD of DAC34H84) with the analog power rail (for example, CLKVDD and AVDD of DAC34H84). Avoid placing noisy supplies and clean supplies on adjacent board layers and use a ground layer between these two supplies if possible. All supply pins should be decoupled as close to the pins as possible by using small value capacitors, with larger bulk capacitors placed further away and near the power supply source.

Copyright © 2011–2015, Texas Instruments Incorporated

Table 66. Power Rails

POWER RAILS	TYPICAL VOLTAGE	NOISE SENSITIVITY	RECOMMENDATIONS	POWER SUPPLY DESIGN PRIORITY
CLKVDD	1.2 V	High	Provide clean supply to the rail. Avoid spurious noise or coupling from other supplies	High
AVDD	3.3 V	High	Provide clean supply to the rail. Avoid spurious noise or coupling from other supplies	High
DACVDD	1.2 V	Medium	Provide clean supply to the rail. Avoid spurious noise or coupling from other supplies	Medium
DIGVDD	1.2 V	Low	Keep Away from other noise sensitive nodes in placement and routing.	Low

10 Layout

10.1 Layout Guidelines

The design of the PCB is critical to achieve the full performance of the DAC34H84 device. Defining the PCB stackup should be the first step in the board design. Experience has shown that at least six layers are required to adequately route all required signals to and from the device. Each signal routing layer must have an adjacent solid ground plane to control signal return paths to have minimal loop areas and to achieve controlled impedances for microstrip and stripline routing. Power planes must also have adjacent solid ground planes to control supply return paths. Minimizing the space between supply and ground planes improves performance by increasing the distributed decoupling.

Although the DAC34H84 device consists of both analog and digital circuitry, TI highly recommends solid ground planes that encompass the device and its input and output signal paths. TI does not recommend split ground planes that divide the analog and digital portions of the device. Split ground planes may improve performance if a nearby, noisy, digital device is corrupting the ground reference of the analog signal path. When split ground planes are employed, one must carefully control the supply return paths and keep the paths on top of their respective ground reference planes.

Quality analog output signals and input conversion clock signal path layout is required for full dynamic performance. Symmetry of the differential signal paths and discrete components in the path is mandatory, and symmetrical shunt-oriented components should have a common grounding via. The high frequency requirements of the analog output and clock signal paths necessitate using differential routing with controlled impedances and minimizing signal path stubs (including vias) when possible.

Coupling onto or between the clock and output signals paths should be avoided using any isolation techniques available including distance isolation, orientation planning to prevent field coupling of components like inductors and transformers, and providing well coupled reference planes. Via stitching around the clock signal path and the input analog signal path provides a quiet ground reference for the critical signal paths and reduces noise coupling onto these paths. Sensitive signal traces must not cross other signal traces or power routing on adjacent PCB layers, rather a ground plane must separate the traces. If necessary, the traces should cross at 90° angles to minimize crosstalk.

The substrate (dielectric) material requirements of the PCB are largely influenced by the speed and length of the high speed serial lanes. Affordable and common FR4 varieties are adequate in most cases.

Coupling of ambient signals into the signal path is reduced by providing quiet, close reference planes and by maintaining signal path symmetry to ensure the coupled noise is common-mode. Faraday caging may be used in very noise environment and high dynamic range applications to isolate the signal path.

The following layout guidelines correspond to the layout shown in Figure 97.

1. DAC output termination resistors should be placed as close to the output pins as possible to provide a DC path to ground and set the source impedance matching.
2. For DAC on-chip PLL clocking mode, if the external loop filter is not used, leave the loop filter pin floating without any board routing nearby. Signals coupling to this node may cause clock mixing spurs in the DAC output.
3. Route the high speed LVDS lanes as impedance-controlled, tightly-coupled, differential traces.

Copyright © 2011–2015, Texas Instruments Incorporated

Layout Guidelines (continued)

4. Maintain a solid ground plane under the LVDS lanes without any ground plane splits.
5. Simulation of the LVDS channel with DAC34H84 IBIS model is recommended to verify good eye opening of the data patterns.
6. Keep the OSTR signal routing away from the DACCLK routing to reduce coupling.
7. Keep routing for RBIAS short, for instance a resistor can be placed on the board directly connecting the RBIAS pin to the ground layer.

The following layout guidelines correspond to the layouts shown in Figure 98 and Figure 99.

1. Noise power supplies should be routed away from clean supplies. Use two power plane layers, preferably with a ground layer in between.
2. As shown in Figure 98 and Figure 99, both layers three and four are designated for power supply planes. The DAC analog powers are all in the same layer to avoid coupling with each other, and the planes are copied from layer three to layer four for double the copper coverage area.
3. Decoupling capacitors should be placed as close to the supply pins as possible. For instance, a capacitor can be placed on the bottom of the board directly connecting the supply pin to a ground layer.

10.1.1 Assembly

Information regarding the package and assembly of the ZAY package version of the DAC34H84 can be found at the end of the data sheet and also on the following application note: SPRAA99

10.2 Layout Examples

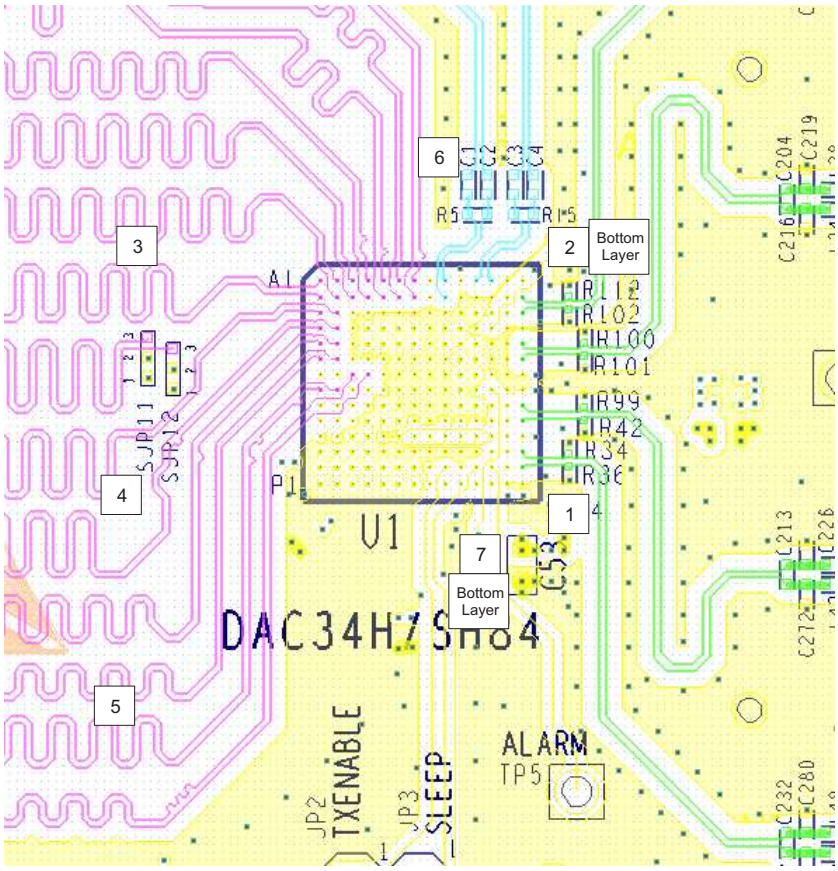

Figure 97. Top Layer of DAC34H84 Layout Showing High Speed Signals such as LVDS Bus, DACCLK, OSTR, and DAC Outputs. Layout Example from TSW3085EVM Rev D

Copyright © 2011–2015, Texas Instruments Incorporated

Layout Examples (continued)

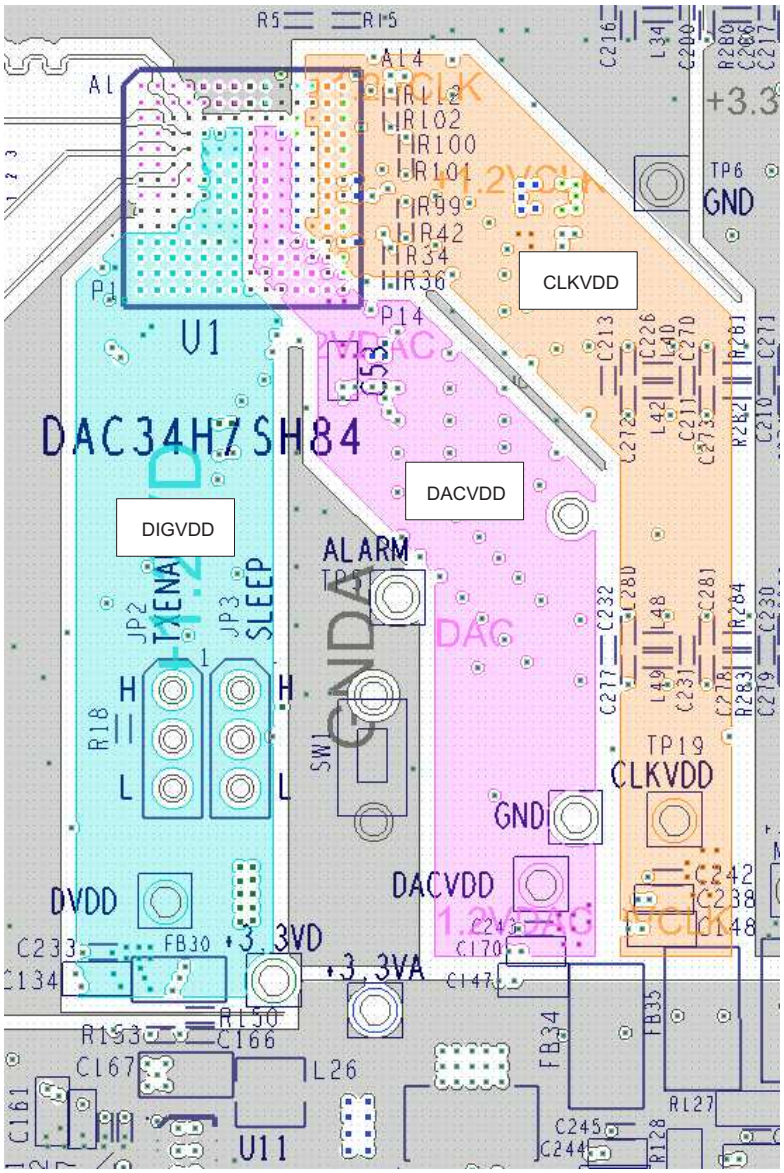

Figure 98. Third Layer of DAC34H84 Layout Showing Power Layers. Layout Example from DAC34H84EVM Rev H

Layout Examples (continued)

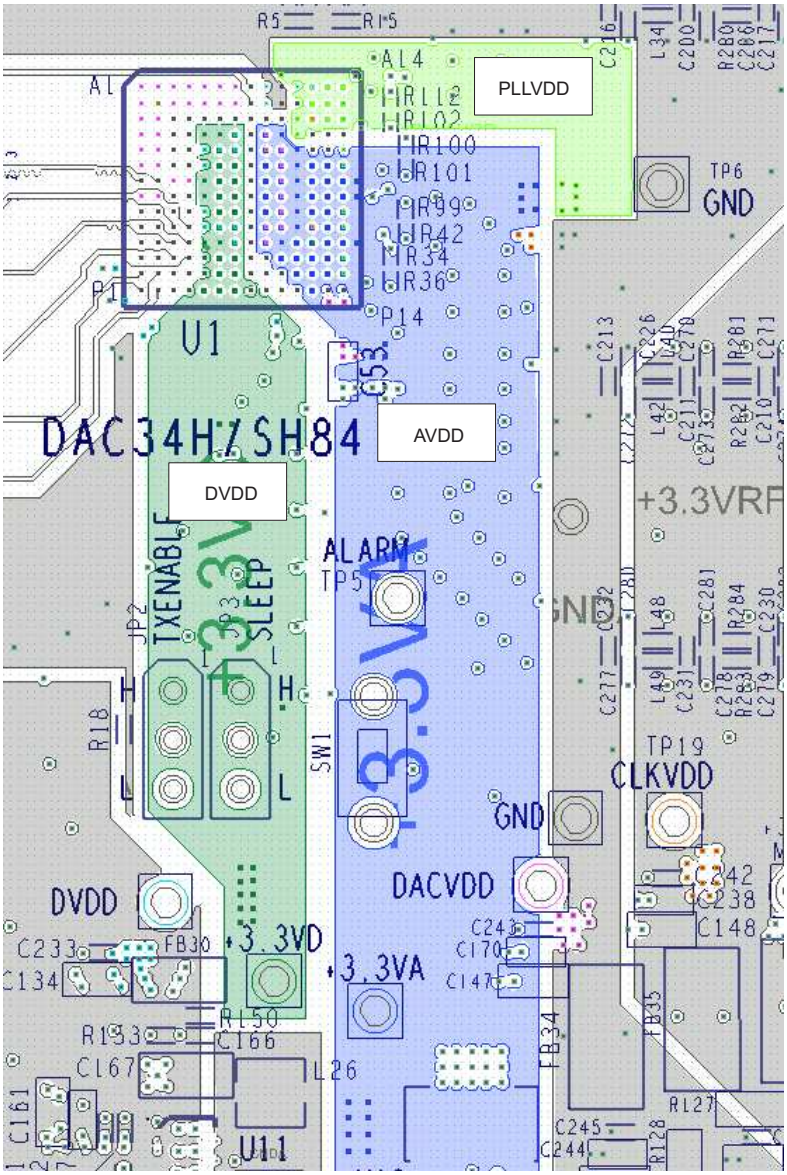

Figure 99. Sixth Layer of DAC34H84 Layout Showing Power Layers. Layout Example from DAC34H84EVM Rev H

Copyright © 2011–2015, Texas Instruments Incorporated

11 Device and Documentation Support

11.1 Device Support

11.1.1 Third-Party Products Disclaimer

TI'S PUBLICATION OF INFORMATION REGARDING THIRD-PARTY PRODUCTS OR SERVICES DOES NOT CONSTITUTE AN ENDORSEMENT REGARDING THE SUITABILITY OF SUCH PRODUCTS OR SERVICES OR A WARRANTY, REPRESENTATION OR ENDORSEMENT OF SUCH PRODUCTS OR SERVICES, EITHER ALONE OR IN COMBINATION WITH ANY TI PRODUCT OR SERVICE.

11.1.2 Device Nomenclature

11.1.2.1 Definition of Specifications

Adjacent Carrier Leakage Ratio (ACLR): Defined for a 3.84Mcps 3GPP W-CDMA input signal measured in a 3.84MHz bandwidth at a 5MHz offset from the carrier with a 12dB peak-to-average ratio.

Analog and Digital Power Supply Rejection Ratio (APSSR, DPSSR): Defined as the percentage error in the ratio of the delta IOUT and delta supply voltage normalized with respect to the ideal IOUT current.

Differential Nonlinearity (DNL): Defined as the variation in analog output associated with an ideal 1 LSB change in the digital input code.

Gain Drift: Defined as the maximum change in gain, in terms of ppm of full-scale range (FSR) per °C, from the value at ambient (25°C) to values over the full operating temperature range.

Gain Error: Defined as the percentage error (in FSR%) for the ratio between the measured full-scale output current and the ideal full-scale output current.

Integral Nonlinearity (INL): Defined as the maximum deviation of the actual analog output from the ideal output, determined by a straight line drawn from zero scale to full scale.

Intermodulation Distortion (IMD3): The two-tone IMD3 is defined as the ratio (in dBc) of the 3rd-order intermodulation distortion product to either fundamental output tone.

Offset Drift: Defined as the maximum change in DC offset, in terms of ppm of full-scale range (FSR) per °C, from the value at ambient (25°C) to values over the full operating temperature range.

Offset Error: Defined as the percentage error (in FSR%) for the ratio between the measured mid-scale output current and the ideal mid-scale output current.

Output Compliance Range: Defined as the minimum and maximum allowable voltage at the output of the current-output DAC. Exceeding this limit may result reduced reliability of the device or adversely affecting distortion performance.

Reference Voltage Drift: Defined as the maximum change of the reference voltage in ppm per degree Celsius from value at ambient (25°C) to values over the full operating temperature range.

Spurious Free Dynamic Range (SFDR): Defined as the difference (in dBc) between the peak amplitude of the output signal and the peak spurious signal within the first Nyquist zone.

Noise Spectral Density (NSD): Defined as the difference of power (in dBc) between the output tone signal power and the noise floor of 1Hz bandwidth within the first Nyquist zone.

11.2 Documentation Support

11.2.1 Related Documentation

- *DAC34H84 EVM* User's Guide (SLAU338)
- *nFBGA Packaging* Application Report (SPRAA99)

Copyright © 2011–2015, Texas Instruments Incorporated

11.3 Community Resources

The following links connect to TI community resources. Linked contents are provided "AS IS" by the respective contributors. They do not constitute TI specifications and do not necessarily reflect TI's views; see TI's Terms of Use.

TI E2E™ Online Community ***TI's Engineer-to-Engineer (E2E) Community.*** Created to foster collaboration among engineers. At e2e.ti.com, you can ask questions, share knowledge, explore ideas and help solve problems with fellow engineers.

Design Support ***TI's Design Support*** Quickly find helpful E2E forums along with design support tools and contact information for technical support.

11.4 Trademarks

E2E is a trademark of Texas Instruments.
All other trademarks are the property of their respective owners.

11.5 Electrostatic Discharge Caution



These devices have limited built-in ESD protection. The leads should be shorted together or the device placed in conductive foam during storage or handling to prevent electrostatic damage to the MOS gates.

11.6 Glossary

SLYZ022 — *TI Glossary*.

This glossary lists and explains terms, acronyms, and definitions.

12 Mechanical, Packaging, and Orderable Information

The following pages include mechanical, packaging, and orderable information. This information is the most current data available for the designated devices. This data is subject to change without notice and revision of this document. For browser-based versions of this data sheet, refer to the left-hand navigation.

Copyright © 2011–2015, Texas Instruments Incorporated

PACKAGING INFORMATION

Orderable Device	Status (1)	Package Type	Package Drawing	Pins	Package Qty	Eco Plan (2)	Lead/Ball Finish (6)	MSL Peak Temp (3)	Op Temp (°C)	Device Marking (4/5)	Samples
DAC34H84IZAY	ACTIVE	NFBGA	ZAY	196	160	Green (RoHS & no Sb/Br)	SNAGCU	Level-3-260C-168 HR	-40 to 85	DAC34H84I	Samples
DAC34H84IZAYR	ACTIVE	NFBGA	ZAY	196	1000	Green (RoHS & no Sb/Br)	SNAGCU	Level-3-260C-168 HR	-40 to 85	DAC34H84I	Samples

(1) The marketing status values are defined as follows:
ACTIVE: Product device recommended for new designs.
LIFEBUY: TI has announced that the device will be discontinued, and a lifetime-buy period is in effect.
NRND: Not recommended for new designs. Device is in production to support existing customers, but TI does not recommend using this part in a new design.
PREVIEW: Device has been announced but is not in production. Samples may or may not be available.
OBSOLETE: TI has discontinued the production of the device.

(2) Eco Plan - The planned eco-friendly classification: Pb-Free (RoHS), Pb-Free (RoHS Exempt), or Green (RoHS & no Sb/Br) - please check http://www.ti.com/productcontent for the latest availability information and additional product content details.
TBD: The Pb-Free/Green conversion plan has not been defined.
Pb-Free (RoHS): TI's terms "Lead-Free" or "Pb-Free" mean semiconductor products that are compatible with the current RoHS requirements for all 6 substances, including the requirement that lead not exceed 0.1% by weight in homogeneous materials. Where designed to be soldered at high temperatures, TI Pb-Free products are suitable for use in specified lead-free processes.
Pb-Free (RoHS Exempt): This component has a RoHS exemption for either 1) lead-based flip-chip solder bumps used between the die and package, or 2) lead-based die adhesive used between the die and leadframe. The component is otherwise considered Pb-Free (RoHS compatible) as defined above.
Green (RoHS & no Sb/Br): TI defines "Green" to mean Pb-Free (RoHS compatible), and free of Bromine (Br) and Antimony (Sb) based flame retardants (Br or Sb do not exceed 0.1% by weight in homogeneous material)

(3) MSL, Peak Temp. - The Moisture Sensitivity Level rating according to the JEDEC industry standard classifications, and peak solder temperature.

(4) There may be additional marking, which relates to the logo, the lot trace code information, or the environmental category on the device.

(5) Multiple Device Markings will be inside parentheses. Only one Device Marking contained in parentheses and separated by a "~" will appear on a device. If a line is indented then it is a continuation of the previous line and the two combined represent the entire Device Marking for that device.

(6) Lead/Ball Finish - Orderable Devices may have multiple material finish options. Finish options are separated by a vertical ruled line. Lead/Ball Finish values may wrap to two lines if the finish value exceeds the maximum column width.

Important Information and Disclaimer: The information provided on this page represents TI's knowledge and belief as of the date that it is provided. TI bases its knowledge and belief on information provided by third parties, and makes no representation or warranty as to the accuracy of such information. Efforts are underway to better integrate information from third parties. TI has taken and continues to take reasonable steps to provide representative and accurate information but may not have conducted destructive testing or chemical analysis on incoming materials and chemicals. TI and TI suppliers consider certain information to be proprietary, and thus CAS numbers and other limited information may not be available for release.

In no event shall TI's liability arising out of such information exceed the total purchase price of the TI part(s) at issue in this document sold by TI to Customer on an annual basis.

PACKAGE OUTLINE

ZAY0196A

NFBGA - 1.4 mm max height

PLASTIC BALL GRID ARRAY

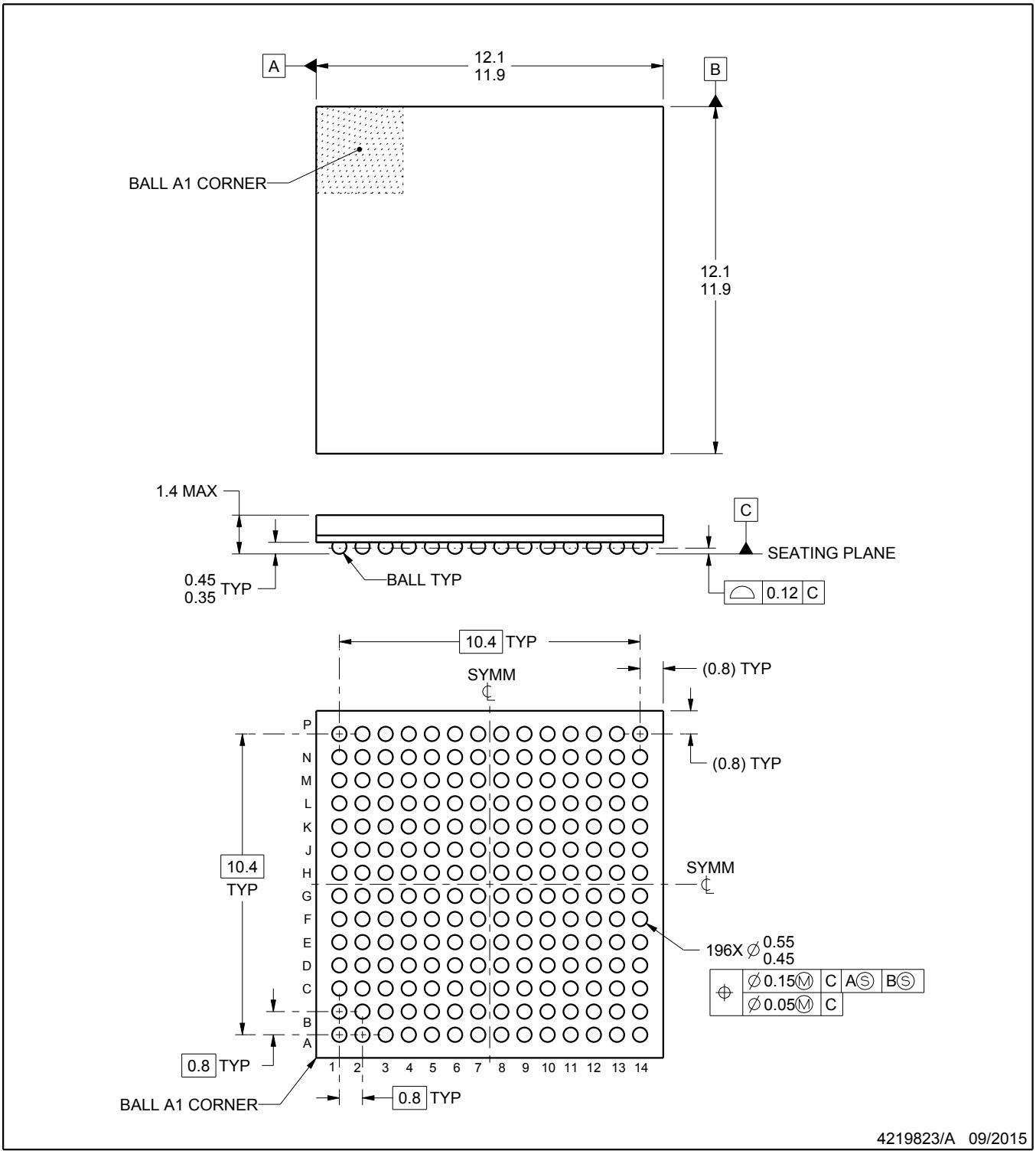

NOTES:

1. All linear dimensions are in millimeters. Any dimensions in parenthesis are for reference only. Dimensioning and tolerancing per ASME Y14.5M.
2. This drawing is subject to change without notice.

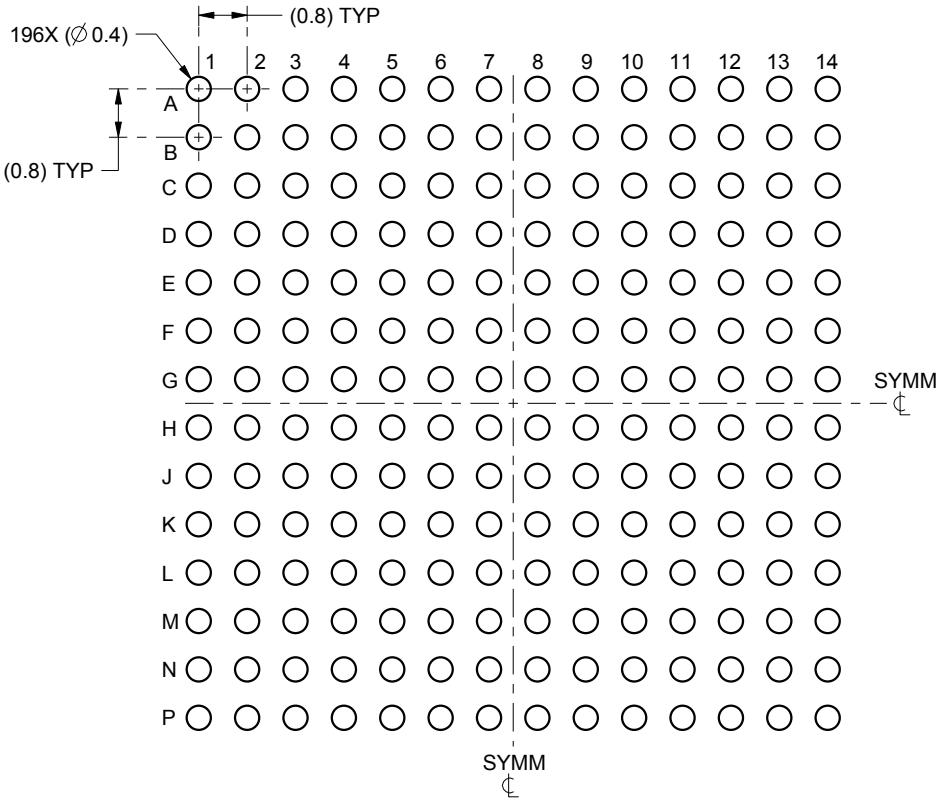

LAND PATTERN EXAMPLE
SCALE:8X

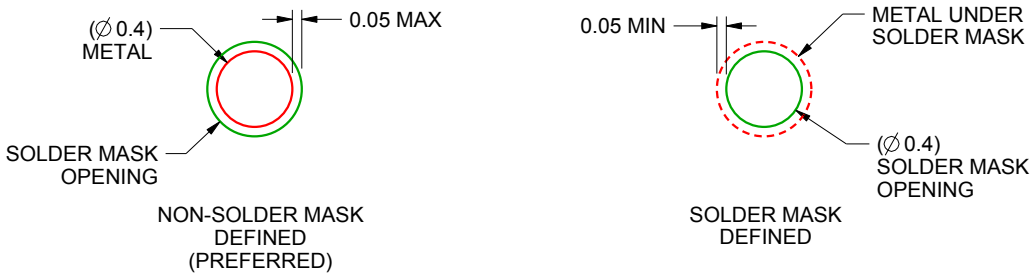

SOLDER MASK DETAILS
NOT TO SCALE

4219823/A 09/2015

NOTES: (continued)

3. Final dimensions may vary due to manufacturing tolerance considerations and also routing constraints. For information, see Texas Instruments literature number SPRAA99 (www.ti.com/lit/spraa99).

EXAMPLE STENCIL DESIGN

ZAY0196A

NFBGA - 1.4 mm max height

PLASTIC BALL GRID ARRAY

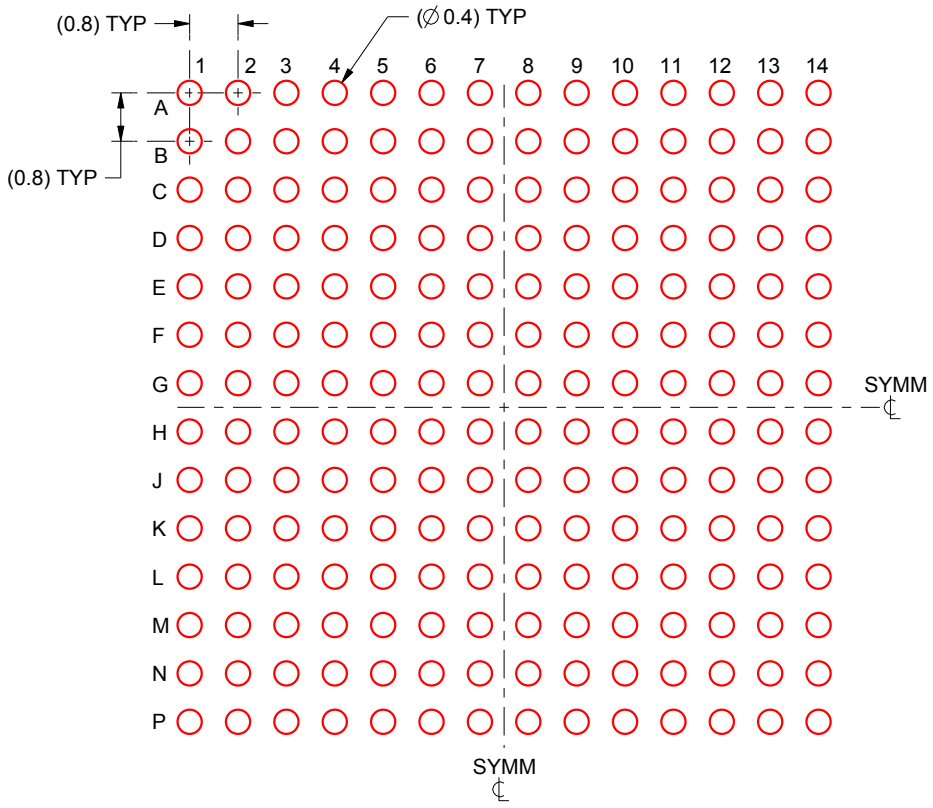

SOLDER PASTE EXAMPLE
BASED ON 0.15 mm THICK STENCIL
SCALE:8X

4219823/A 09/2015

NOTES: (continued)

4. Laser cutting apertures with trapezoidal walls and rounded corners may offer better paste release.

IMPORTANT NOTICE

Texas Instruments Incorporated (TI) reserves the right to make corrections, enhancements, improvements and other changes to its semiconductor products and services per JESD46, latest issue, and to discontinue any product or service per JESD48, latest issue. Buyers should obtain the latest relevant information before placing orders and should verify that such information is current and complete.

TI's published terms of sale for semiconductor products (http://www.ti.com/sc/docs/stdterms.htm) apply to the sale of packaged integrated circuit products that TI has qualified and released to market. Additional terms may apply to the use or sale of other types of TI products and services.

Reproduction of significant portions of TI information in TI data sheets is permissible only if reproduction is without alteration and is accompanied by all associated warranties, conditions, limitations, and notices. TI is not responsible or liable for such reproduced documentation. Information of third parties may be subject to additional restrictions. Resale of TI products or services with statements different from or beyond the parameters stated by TI for that product or service voids all express and any implied warranties for the associated TI product or service and is an unfair and deceptive business practice. TI is not responsible or liable for any such statements.

Buyers and others who are developing systems that incorporate TI products (collectively, "Designers") understand and agree that Designers remain responsible for using their independent analysis, evaluation and judgment in designing their applications and that Designers have full and exclusive responsibility to assure the safety of Designers' applications and compliance of their applications (and of all TI products used in or for Designers' applications) with all applicable regulations, laws and other applicable requirements. Designer represents that, with respect to their applications, Designer has all the necessary expertise to create and implement safeguards that (1) anticipate dangerous consequences of failures, (2) monitor failures and their consequences, and (3) lessen the likelihood of failures that might cause harm and take appropriate actions. Designer agrees that prior to using or distributing any applications that include TI products, Designer will thoroughly test such applications and the functionality of such TI products as used in such applications.

TI's provision of technical, application or other design advice, quality characterization, reliability data or other services or information, including, but not limited to, reference designs and materials relating to evaluation modules, (collectively, "TI Resources") are intended to assist designers who are developing applications that incorporate TI products; by downloading, accessing or using TI Resources in any way, Designer (individually or, if Designer is acting on behalf of a company, Designer's company) agrees to use any particular TI Resource solely for this purpose and subject to the terms of this Notice.

TI's provision of TI Resources does not expand or otherwise alter TI's applicable published warranties or warranty disclaimers for TI products, and no additional obligations or liabilities arise from TI providing such TI Resources. TI reserves the right to make corrections, enhancements, improvements and other changes to its TI Resources. TI has not conducted any testing other than that specifically described in the published documentation for a particular TI Resource.

Designer is authorized to use, copy and modify any individual TI Resource only in connection with the development of applications that include the TI product(s) identified in such TI Resource. NO OTHER LICENSE, EXPRESS OR IMPLIED, BY ESTOPPEL OR OTHERWISE TO ANY OTHER TI INTELLECTUAL PROPERTY RIGHT, AND NO LICENSE TO ANY TECHNOLOGY OR INTELLECTUAL PROPERTY RIGHT OF TI OR ANY THIRD PARTY IS GRANTED HEREIN, including but not limited to any patent right, copyright, mask work right, or other intellectual property right relating to any combination, machine, or process in which TI products or services are used. Information regarding or referencing third-party products or services does not constitute a license to use such products or services, or a warranty or endorsement thereof. Use of TI Resources may require a license from a third party under the patents or other intellectual property of the third party, or a license from TI under the patents or other intellectual property of TI.

TI RESOURCES ARE PROVIDED "AS IS" AND WITH ALL FAULTS. TI DISCLAIMS ALL OTHER WARRANTIES OR REPRESENTATIONS, EXPRESS OR IMPLIED, REGARDING RESOURCES OR USE THEREOF, INCLUDING BUT NOT LIMITED TO ACCURACY OR COMPLETENESS, TITLE, ANY EPIDEMIC FAILURE WARRANTY AND ANY IMPLIED WARRANTIES OF MERCHANTABILITY, FITNESS FOR A PARTICULAR PURPOSE, AND NON-INFRINGEMENT OF ANY THIRD PARTY INTELLECTUAL PROPERTY RIGHTS. TI SHALL NOT BE LIABLE FOR AND SHALL NOT DEFEND OR INDEMNIFY DESIGNER AGAINST ANY CLAIM, INCLUDING BUT NOT LIMITED TO ANY INFRINGEMENT CLAIM THAT RELATES TO OR IS BASED ON ANY COMBINATION OF PRODUCTS EVEN IF DESCRIBED IN TI RESOURCES OR OTHERWISE. IN NO EVENT SHALL TI BE LIABLE FOR ANY ACTUAL, DIRECT, SPECIAL, COLLATERAL, INDIRECT, PUNITIVE, INCIDENTAL, CONSEQUENTIAL OR EXEMPLARY DAMAGES IN CONNECTION WITH OR ARISING OUT OF TI RESOURCES OR USE THEREOF, AND REGARDLESS OF WHETHER TI HAS BEEN ADVISED OF THE POSSIBILITY OF SUCH DAMAGES.

Unless TI has explicitly designated an individual product as meeting the requirements of a particular industry standard (e.g., ISO/TS 16949 and ISO 26262), TI is not responsible for any failure to meet such industry standard requirements.

Where TI specifically promotes products as facilitating functional safety or as compliant with industry functional safety standards, such products are intended to help enable customers to design and create their own applications that meet applicable functional safety standards and requirements. Using products in an application does not by itself establish any safety features in the application. Designers must ensure compliance with safety-related requirements and standards applicable to their applications. Designer may not use any TI products in life-critical medical equipment unless authorized officers of the parties have executed a special contract specifically governing such use. Life-critical medical equipment is medical equipment where failure of such equipment would cause serious bodily injury or death (e.g., life support, pacemakers, defibrillators, heart pumps, neurostimulators, and implantables). Such equipment includes, without limitation, all medical devices identified by the U.S. Food and Drug Administration as Class III devices and equivalent classifications outside the U.S.

TI may expressly designate certain products as completing a particular qualification (e.g., Q100, Military Grade, or Enhanced Product). Designers agree that it has the necessary expertise to select the product with the appropriate qualification designation for their applications and that proper product selection is at Designers' own risk. Designers are solely responsible for compliance with all legal and regulatory requirements in connection with such selection.

Designer will fully indemnify TI and its representatives against any damages, costs, losses, and/or liabilities arising out of Designer's non-compliance with the terms and provisions of this Notice.

Mailing Address: Texas Instruments, Post Office Box 655303, Dallas, Texas 75265
Copyright © 2017, Texas Instruments Incorporated