ETA-USA

The Power Professionals

DAC-10 — 10W AC/DC

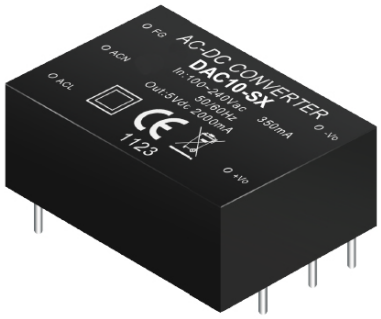

Features

- Available in Wide range of output VDC
- Isolated output 3000VAC
- Up to 82% Efficiency
- Encapsulated compact size 2" X1
- CE recognized
- ITE & AC Motor Applications
- **3 year warranty**

CE RoHS

	MODEL/CHANNEL	Unit	DAC10-3.3	DAC10-05	DAC10-12	DAC10-15
OUTPUT	Nominal Voltage	V	3.3	5	12	15
	Current	A	3	2	1	0.8
	Efficiency	%	74	76	80	80
	Voltage Accuracy	%	+/-3		+/-2%	
	Ripple & Noise(max.) (*1)	mV	150			

	MODEL/CHANNEL	Unit	DAC10-24	DAC10-48
	Nominal Voltage	V	24	48
	Current	A	0.5	0.25
	Efficiency	%	80	82
	Ripple & Noise(max.) (*1)	mV	240	
	Load Regulations	mV	+/-2%	
	Line Regulations	mV	+/-1%	
	Voltage Accuracy	%	+/-2%	
	Over Load Protection	-	Auto Recovery Above 110% rated output power	
	Short Circuit Protection	-	CONT. Auto Recovery	
	Transient Recovery Time	-	Vi nom, Io nom = 0.5 Io nom Typ. 1000us	
INPUT	Voltage, Frequency	V	Universal Input voltage AC 90V~264V (DC 120~370VDC); 47~63Hz	
	Min Load	-	0%	
	Inrush Current Typ.	A	115V 12A (Ta=25°C, Io=100% at cold start); 230V 20A (Ta=25°C, Io=100% at cold start)	
	Operating Frequency	KHz	65	
Electrical Isolation	Isolation Voltage	-	Input/Output 3KVac/ 5mA/5Secs	
	Isolation Resistance	-	Input/Output, @500 Vdc 100MΩ	
	Operating Temp. & Hum.	-	-20~ +70°C	
	Storage Temp. & Hum.	-	-40~+85°C Humidity 95% 5RH%	
	Derating	-	Vi nom, Io nom +51 to 71°C 2%/°C	
Dimension	Size(LxWxH) / Weight	mm/g	L63.5 x W44.45 x H19.05mm L2.5x W1.75 x H0.75 inches	
	Safety	-	CE EN60950-1, EMI C ompliance to EN55022; EMS Immunity Compliance to EN55024	

ETA-USA 16170 Vineyard Blvd. Suite 180 Morgan Hill, CA 95037 http://www.eta-usa.com
Toll-free (US only): 800-ETA-POWR (800-382-7697) Telephone: 408 778-2793 FAX: 408-779-2753

Derating Curve & Mounting Diagram

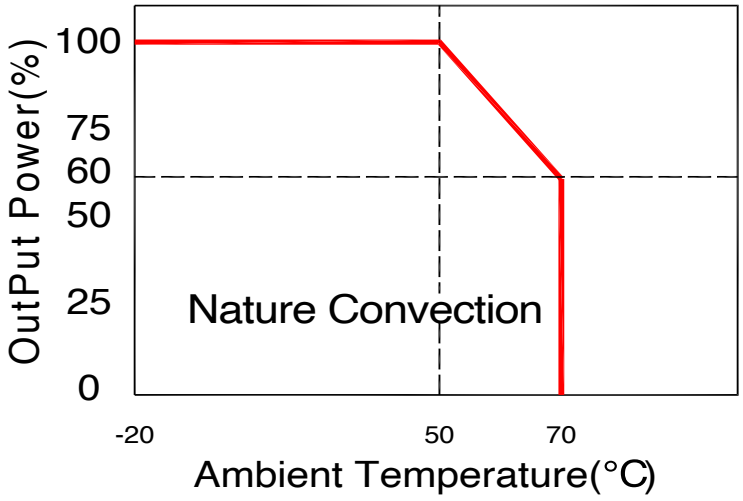

Dimension Diagram (mm)

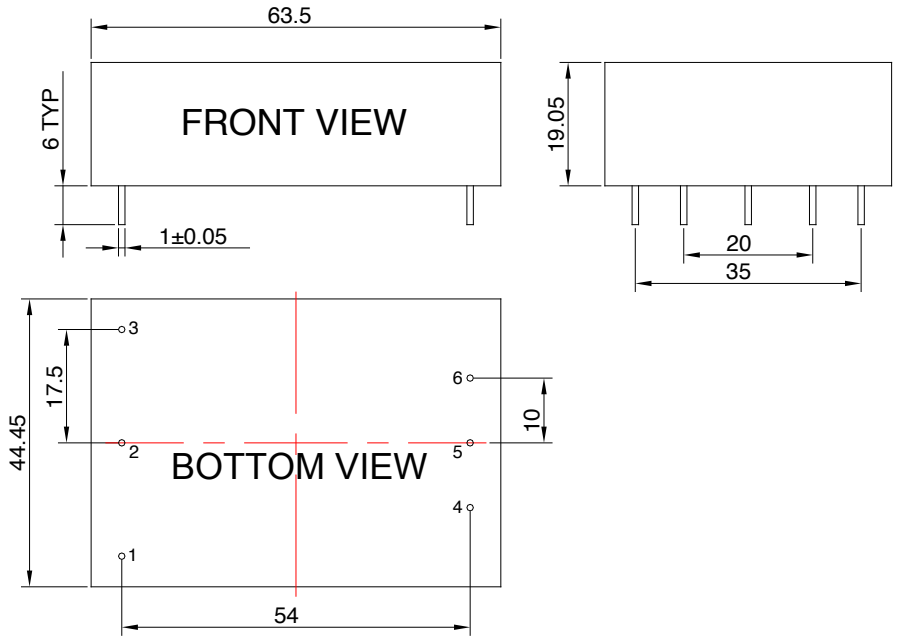

Unit: mm Unless otherwise specified, all tolerances are ±0.5

Block Diagram

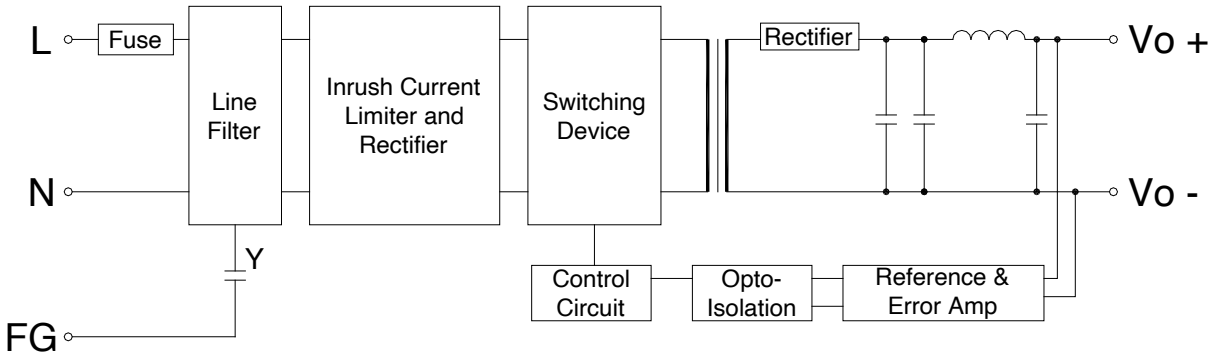

Terminal Output

	Model		
PIN	Single	Dual	Dual
1	FG	FG	FG
2	ACN	ACN	ACN
3	ACL	ACL	ACL
4	-Vo	-Vo	+Vo2
5	NO PIN	COM	COM
6	+Vo	+Vo	+Vo1