Ruggedized 5.0" Display Head Assembly with Backlight (320 x 234)

OVERVIEW

White Electronic Designs' 5.0" sunlight readable display head assembly with backlight is ruggedized for harsh environments. Off-the-shelf AMLCD technology combined with proven ruggedization techniques provides a cost-effective, multifunctional display assembly for commercial, industrial, and military applications. Our unique patented SBLR™ (Super Bright Low Reflectance) technology provides optimal readability even in bright sunlight.

- 5.0" TFT Color Active Matrix LCD
- Landscape Mode
- 4:3 Aspect Ratio
- ±55°(H); +35°/-55°(V) Viewing Angle @ 5:1 C/R
- 1/4 VGA 320 x 234 Resolution
- Accepts 2 Channels RGB Analog Input
- Accepts NTSC Composite Video
- Accepts S-Video (Y/C)
- Anti-reflective SBLR™ Technology
- High Bright/Long Life Backlight
- 1000:1 Wide Dimming Range Over Temperature

Note: This data sheet is subject to change or cancellation without notice.

LCD PANEL SPECIFICATIONS

Parameter	Specification	Units
Panel Dimensions	111.6(H) x 85.3(V)	mm
Screen Size	127 mm (5.0" diag.)	mm
Active Viewing Area	102.7(H) x 74.9(V)	mm
Display Format	320 x RGB x 234	pixels
Viewing Orientation	6 O'clock	
Dot Pitch	0.107(H) x 0.320(V)	mm
Pixel Configuration	RGB Vertical Stripe	
Display Mode	Normally White	



ENVIRONMENTAL CHARACTERISTICS

- Temperature:
  - Operating: -40°C to +85°C
  - Non Operational: -40°C to +85°C

INTERFACE CHARACTERISTICS

Driver Signal Compatibility

Accepts RGB Analog using NTSC or PAL timing

Accepts External Dot Clock

Accepts Discrete and Composite Sync Signals

White Electronic Designs Corp. reserves the right to change products or specifications without notice.

FIG. 1 DISPLAY HEAD ASSEMBLY BLOCK DIAGRAM

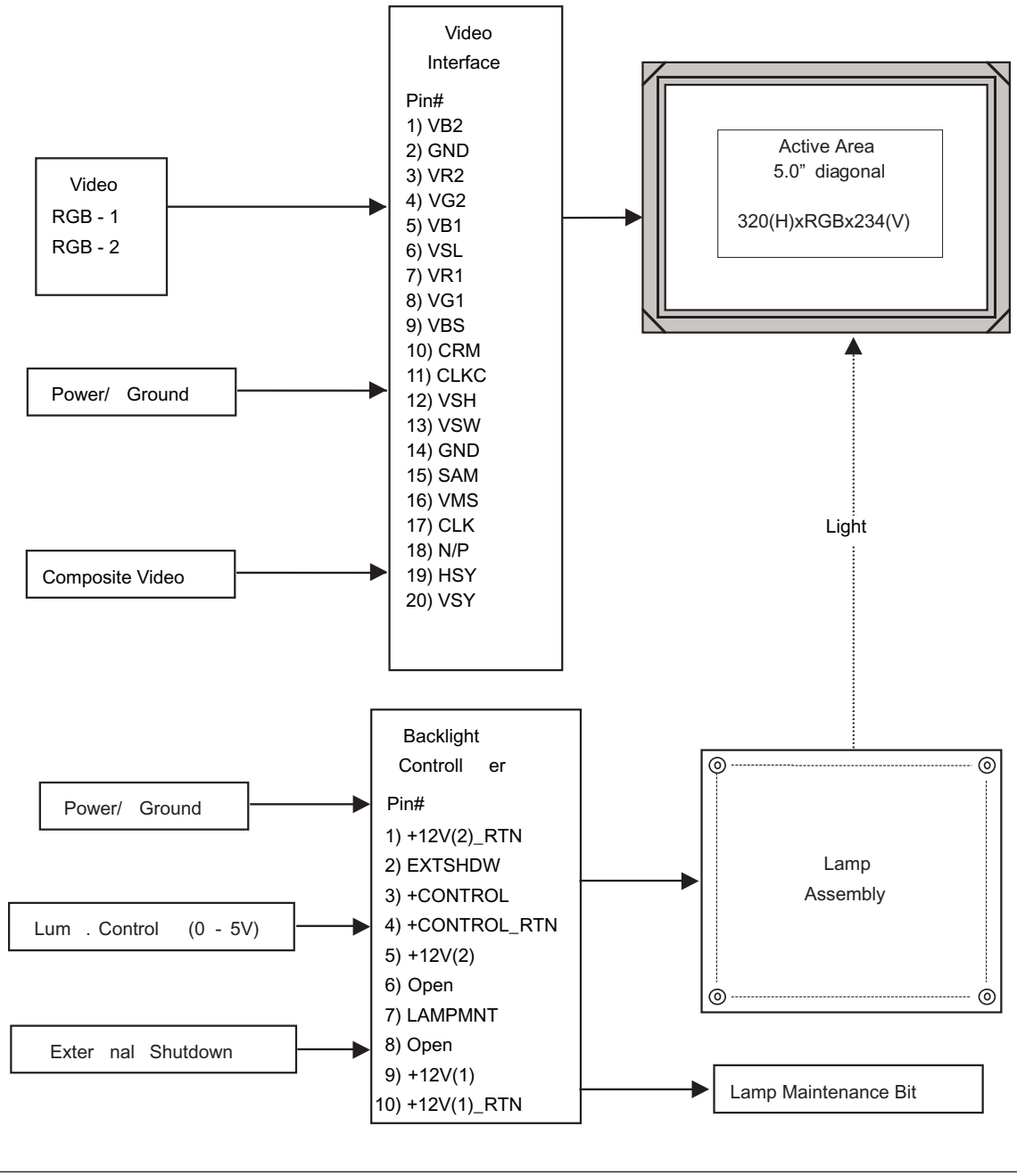

White Electronic Designs Corp. reserves the right to change products or specifications without notice.

FIG. 2 MECHANICAL OUTLINE DIMENSIONS

FRONT VIEW

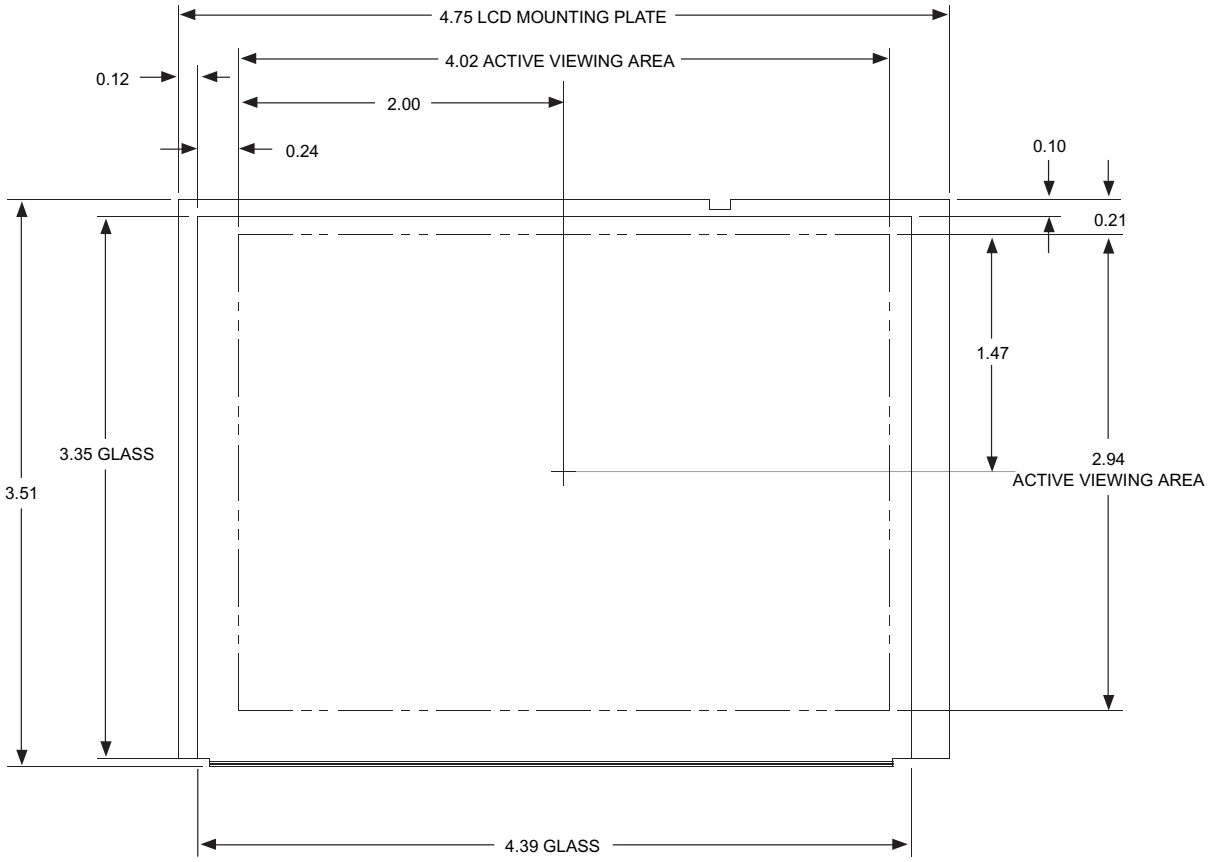

ALL DIMENSIONS ARE IN INCHES.

SIDE VIEW

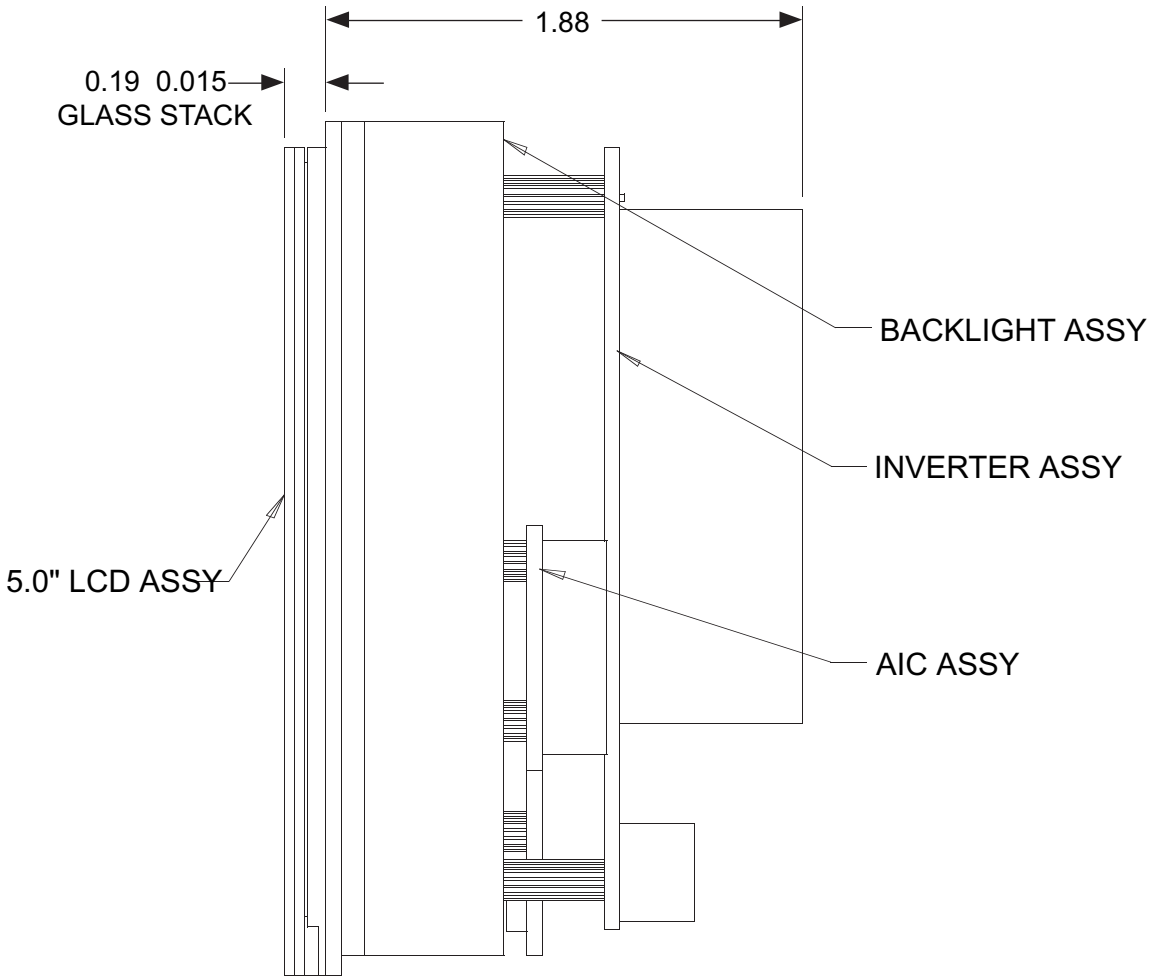
1.88
0.19 0.015
GLASS STACK
BACKLIGHT ASSY
INVERTER ASSY
5.0" LCD ASSY
AIC ASSY

SPECIFICATION

This is the specification for the high performance Backlight System that is used to illuminate a 5.0-inch AMLCD display head.

The backlight is a closed loop luminance sensed system. A sensor monitors the bulb's luminance output and compares it with the control voltage to regulate output. The luminance is maintained over time and temperature variations.

Our multi-bulb system offers built-in redundancy for continued lighting in the event of single bulb failure. A built-in lamp heater assembly maintains bulb temperature at its optimum level. External shutdown of the heater and lamp power are controlled via an external input. When lamp replacement is required, an output pin signals low.

External voltage input is a differential input that provides common mode rejection of common mode noise. The luminance output versus input voltage response is non-linear to provide easy adjustments at low luminance.

SIGNAL DEFINITION

Pin	Signal Acronym	Input/ Output	Description
1	+12V(2)_RTN	Input	Backlight heater return
2	EXTSHDW	Input	Input signal used to shutdown the lamp and heater power, the control circuitry will still be powered.
3	+CONTROL	Input	Positive side of the differential voltage control for the backlight.
4	+CONTROL_RTN	Input	Negative side of the differential voltage control for the backlight. (Normally Grounded)
5	+12V(2)	Input	This is the power for the internal backlight heater.
6	Not Used		
7	LAMPMNT	Output	Output signal to indicate the lamps need replacement.
8	Not Used	Input	Shield of the control voltage cable.
9	+12V(1)	Input	+12 volt power used for the backlight circuitry.
10	+12V(1)_RTN	Input	+12 volt return

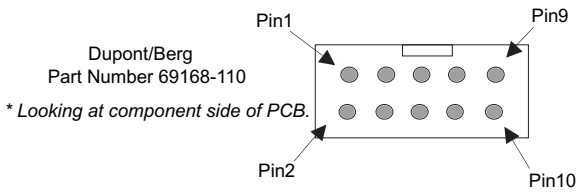

INPUT SIGNALS

+12V(1), +12V(1)_RTN : Power and Return for lamp and control circuitry

Tolerance:	± 5%
Noise & Ripple:	150mVp-p
Current Cap:	1.4 Amps max
Recommended Cabling:	#24 AWG Twisted

+12V(2), +12V(2)_RTN : Power and Return for heater

Tolerance:	±5%
Noise & Ripple:	150 mVp-p
Current Cap:	1.0 Amp max
Recommended Cabling:	#24 AWG Twisted

+CONTROL, -CONTROL_RTN : 0 to 5V Input for luminance control voltage

Control Voltage:	0 to +5 V
Noise & Ripple:	< 10mVp-p
Current Cap:	1mA
Recommended Cabling:	#24 AWG Twisted

LUMINANCE

Luminance Range: Low: 0.1 fl max.
High: 100fl min.

Control Voltage: 0.000 to 5.000 Volts

(The adjustment range is monotonic with 8 BIT resolution.)

Uniformity: 30% measured at 5 spots

Note: All measurements at 25^{0}C

VIDEO INTERFACE SPECIFICATIONS

FEATURES

- Dual Mode NTSC (M) and PAL F Timing for RGB Video and NTSC Timing for Composite Video
- Supports Two Sets of Analog RGB Video Signals
- NTSC Composite or S-Video Signals
- Display Resolution 320 x 234 (NTSC) and 320 x 273 (PAL)
- External Clock Mode

White Electronic Designs Corp. reserves the right to change products or specifications without notice.

ABSOLUTE MAXIMUM RATINGS

Supply Voltage (VSH to GND)	+15V
Supply Voltage (VSL to GND)	-15V
Analog Input (VA)	-0.3 to + 2.0V
Digital Input (VD)	-0.3 to VS to +0.3V
Power Consumption (w/panel)	+12 @ 0.160 mA (max) -12 @ 0.050 mA (max)
Power Dissipation	3.0 Watts (max)

POWER INPUT SPECIFICATIONS

Parameter	Symbol	Min	Typ	Max	Units
Positive Input Voltage	VS	10.5	12.0	13.0	VDC
Negative Input Voltage	VSL	-8.0	-12.0	-13.0	VDC
Analog Input Voltage	VAH	0.7	0.74	1.0	Vp-p
Digital Input Voltage (High)	VDH	3.7	--	5.1	VDC
Digital Input Voltage (Low)	VDL	0	--	1.0	VDC

PHYSICAL SPECIFICATIONS

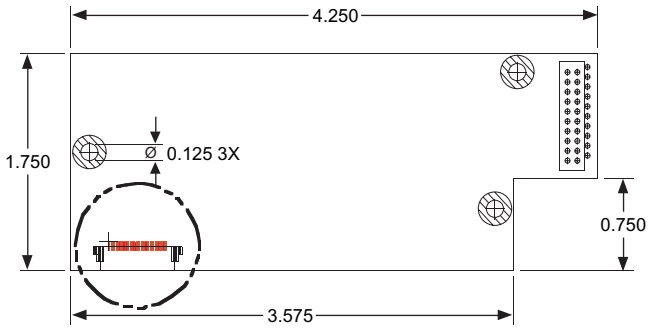

TIMING WAVEFORM

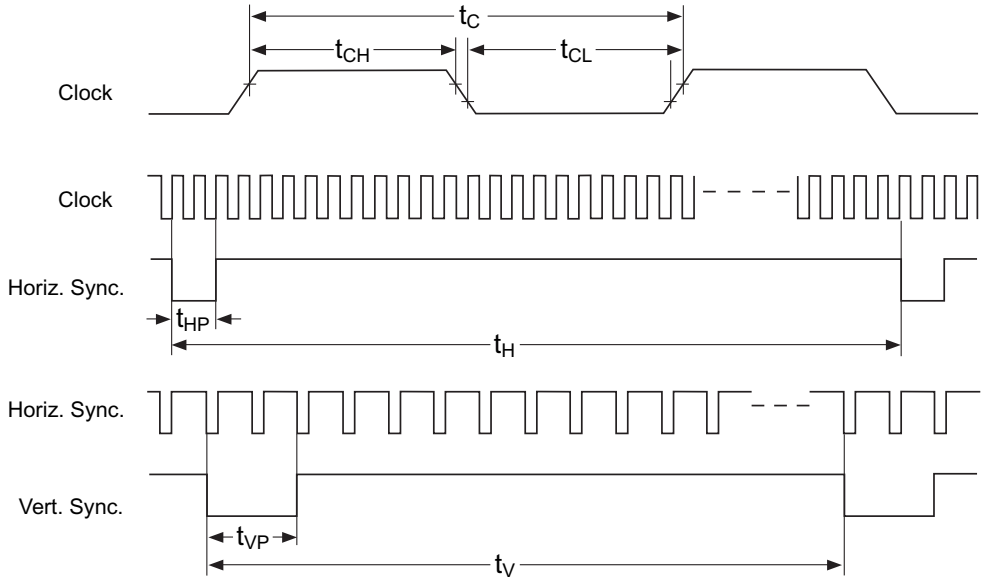

SIGNAL PARAMETERS

Parameter		Symbol	Min	Typ	Max	Units
Horizontal Sync Input CLKC = HI	frequency NTSC	fh(N)	15.13	15.73	16.33	kHz
	frequency PAL	fh(P)	15.03	15.63	16.23	kHz
	pulse width NTSC	tv(N)	4.2	4.7	5.2	µs
	pulse width PAL	tv(P)	4.2	4.7	5.2	µs
	rise time	trv1			0.5	µs
	fall time	tfv1			0.5	µs
Vertical Sync Input CLKC = HI	frequency NTSC	fh(N)	fh/284	fh/262	fh/258	Hz
	frequency PAL	fh(P)	fh/344	fh/312	fh/304	Hz
	pulse width NTSC	tv(N)		3h		µs
	pulse width PAL	tv(P)		2.5h		µs
	rise time	trv1			0.5	µs
	fall time	tfv1			0.5	µs
SAM=LO SAM=HI Clock Input Input CLKC = LO	frequency fc	fcli	6.0	6.8	7.6	MHz
	frequency fc	fcli	18.2	18.9	20	MHz
	HI width	twh	20.0			ns
	LO width	twl	20.0			ns
	rise time	trcl1			5.0	ns
	fall time	tfcl1			5.0	ns
SAM=HI SAM=LO Horizontal Sync Input CLKC = LO	frequency	fhi	fcli/1230	15.73	16.33	MHz
	frequency	fhi	fcli/465			MHz
	pulse width	thi	1.0	4.7	5.2	µs
	rise time	trhi			0.05	µs
	fall time	tfhi			0.05	µs
Vertical Sync Input CLKC = LO	frequency	VSY	fh/284	fh/262	fh/258	Hz
	pulse width		1h	3h	5h	µs
	rise time				0.5	µs
	fall time				0.5	µs
Data set up time Data hold time	CLK ↑		25			ns
	note 1		25			ns
Data set up time Data hold time	CLK ↑		1			µs
	note 2		1			µs

NOTES:

1. In the case where CLKC = HI, this shows the phase difference from HSY to CLK. In that case HSY will be taken at the rise timing of CLK
2. In the case where CLKC = HI, this shows the phase difference from VSY to HSY. In that case VSY will be taken at the rise timing of HSY

SIGNAL DEFINITION

Pin	Symbol	Input/ Output	Description
1	VB2	Input	Video Signal - Blue
2	GND	Input	Ground
3	VR2	Input	Video Signal - Red
4	VG2	Input	Video Signal - Green
5	VB1	Input	Video Signal - Blue
6	VSL	Input	Negative Power Supply Voltage (-12V)
7	VR1	Input	Video Signal - Red
8	VG1	Input	Video Signal - Green
9	VBS	Input	NTSC Video/Composite Sync (RS170 timing)
10	CRM	Input	Chrominance Signal for Y/C video Chrominance Input when VSW = L and Composite Video when H
11	CLKC	Input	Clock Selection
12	VSH	Input	Positive Power Supply (+12V)
13	VSW	Input	Video Input Mode Select (See Chart) High = RGB1; Low = RGB2
14	GND	Input	Ground
15	SAM	Input	Sampling Order for RGB Low = Simultaneous, High = Independent
16	VMS	Input	Video Input Mode Select (See Chart) Low = Composite or Y/C Video; High = RGB Video
17	CLK	Input	Dot Clock
18	N/P	Input	RGB Display Modes (NTSC or PAL)
19	HSY	I/O	Horizontal Sync. Low TTL
20	VSY	I/O	Vertical Sync. Low TTL

CONNECTOR TYPE

The replacement interface for the LQ6FW315 glass uses a 2mm 20 pin Molex right angle connector for the video, power, and clock inputs. This interface supports both NTSC Composite, S Video, and RGB depending on how the video select channels are biased (see chart).

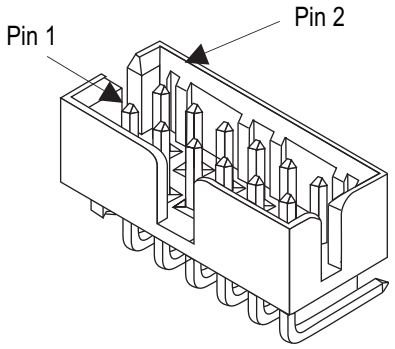

20 pin shrouded right angle Molex connector with 30µ" gold: P/N 87333-2021. Arrow denotes pin 1 *(Note picture is not actual connector, for pin reference only*).

VIDEO SELECT

Video Select	Terminal	
	VSW	VSM
RGB-1	High	High
RGB-2	Low	High
NTSC	High	Low
S-video	Low	Low

CLOCK SELECT

Terminal	CLKC=H		CLKC=L	
	SAM=H	SAM=L	SAM=H	SAM=L
HSY	Output	Output	Input	Input
VSY	Output	Output	Input	Input
CLK	Output Low	Output Dot Clock	Input Pixel Clock	Input Dot Clock

White Electronic Designs Corp. reserves the right to change products or specifications without notice.

OPTICAL SPECIFICATIONS

VIEWING ANGLE

With SBLR™ technology, our wide viewing angle 5.0" ruggedized unit can further improve the viewing area for applications where sunlight readability at extreme angles is critical.

The contrast at the following angles shall maintain a ratio of 5:1 in dark ambient conditions.

Left/Right: 55°/ 55°

Top/Bottom: +35°/ -55°

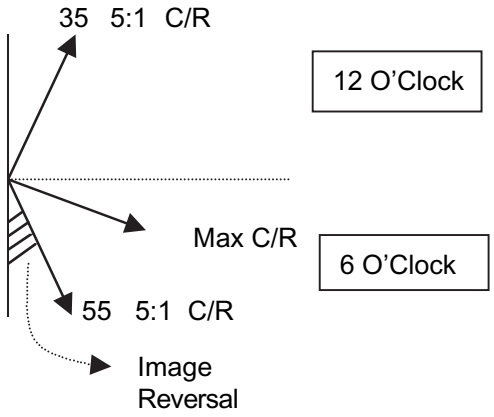

VIEWING ANGLE

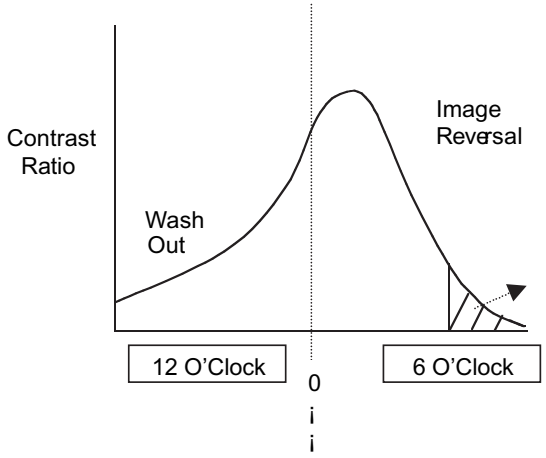

ISO - CONTRAST

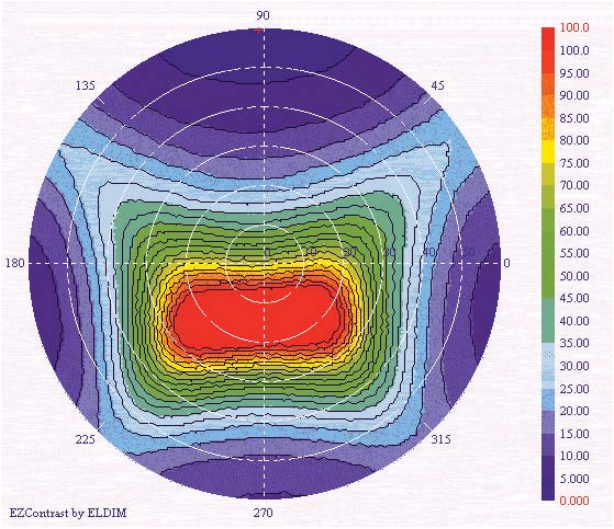

White Electronic Designs Corp. reserves the right to change products or specifications without notice.

OPTICAL CHARACTERISTICS AT 25°C

Parameter		Condition	Typ	Max	Units
Response Time	Rise	Electrically On	30	60	ms
	Decay	Electrically Off	50	100	ms
Transmission		On White	5.5	—	%
Specular Reflectance		0 to 30 degrees	1.5	2	%
Diffuse Reflectance		+/-45 degrees @ 8000 FC	0.15	0.2	%
Dot Pitch	Horizontal		0.107	—	mm
	Vertical		0.320	—	mm
Chromaticity Coordinates(1)					
Red	x		0.612	—	
	y		0.343	—	
Green	x		0.302	—	
	y		0.596	—	
Blue	x		0.156	—	
	y		0.172	—	
White	x		0.337	—	
	y		0.397	—	
Black	x		0.298	—	
	y		0.364	—	

NOTE:
1. Chromaticity measured at center of display and normal B display.

ENVIRONMENTAL SPECIFICATIONS

Operating Temperature:	-40°C to +85°C
Storage Temperature:	-40°C to +85°C
Altitude:	60,000 feet
Shock:	20G, 11ms
Vibration	
(endurance):	0.04 g^2/Hz, 15Hz to 2000Hz, 8.91grms.
(operation):	0.008 g^2/Hz, 15-30Hz, -8db/oct, 30-35Hz
	0.005 g^2/Hz, 35-2000Hz, 3.16grms.
Humidity:	95% RH at 65°C per Mil-STD-81OE, Method 507.3 Procedure III Aggravated