Safety-door Switch

D4BS

Safety-door Switch's Special Operation Key Directly Pulls Apart the Contacts from Each Other and Contributes to the Safety of the Production Site

- Conforms to EN (TÜV) standards corresponding to the CE marking.
- Approved by UL, CSA, BIA, and SUVA standards.
- The switch contact is opened by a direct opening mechanism (NC contacts only) when the protective cover is opened. The EN-approved direct opening mechanism is indicated by ⊖ on the Switch.
- Degree of protection of the switch box: IP67 (EN60947-5-1).
- Series includes models with gold-plated contacts for handling the micro-load range.
- Metric conduit types available.

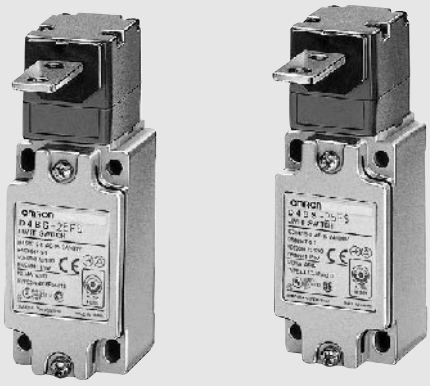

Model Number Structure

Model Number Legend

Switch

D4BS - □ □ □ S
1 2 3

1. Conduit
1: PG13.5 (1 conduit)
2: G1/2 (1 conduit)
3: 1/2-14NPT (1 conduit)
4: M20
5: PG13.5 (3-conduit)
6: G1/2 (3-conduit)
7: 1/2-14NPT (3-conduit)
8: M20 (3-conduit)

2. Built-in Switch
5: 1NC/1NO (slow-action)
6: 1NC/NO (slow-action), gold-plated contacts
A: 2NC (slow-action)
B: 2NC (slow-action), gold-plated contacts

3. Head Mounting Direction
F: Four mounting directions possible (front-side mounting at shipping)

Operation Key

D4BS - K □
1

1. Operation Key Type
1: Horizontal mounting
2: Vertical mounting
3: Adjustable mounting (Horizontal)

Ordering Information

List of Models

Switches

Type	Mounting direction		Conduit size	1NC/1NO (Slow-action)	2NC (Slow-action)
1-conduit	Front-side mounting		Pg13.5	D4BS-15FS	D4BS-1AFS
			G1/2	D4BS-25FS	D4BS-2AFS
			M20	D4BS-45FS	D4BS-4AFS
3-conduit			Pg13.5	D4BS-55FS	D4BS-5AFS
			G1/2	D4BS-65FS	D4BS-6AFS
			M20	D4BS-85FS	D4BS-8AFS

Operation Keys (Order Separately)

Type	Model
Horizontal mounting 	D4BS-K1
Vertical mounting 	D4BS-K2
Adjustable mounting (Horizontal) 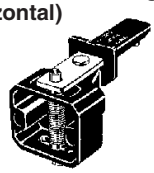	D4BS-K3

Specifications

Approved Standards

Agency	Standard	File No.
TÜV Rheinland	EN60947-5-1	R9351022 (Direct opening: approved)
UL	UL508	E76675
CSA	CSA C22.2 No. 14	LR45746
BIA	GS-ET-15	9303323
SUVA	SUVA	E6187.d

Standards and EC Directives

Conforms to the following EC Directives:
Machinery Directive
Low Voltage Directive
EN50041
EN1088

Approved Standard Ratings

TÜV (EN60947-5-1)

Utilization category	AC-15
Rated operating current (Ie)	2 A
Rated operating voltage (Ue)	400 V

Note: Use a 10-A fuse type a gI or gG that conforms to IEC269 as a short-circuit protection device.

UL/CSA (UL508, CSA C22.2 No. 14)

A600

Rated voltage	Carry current	Current		Volt-amperes	
		Make	Break	Make	Break
120 VAC	10 A	60 A	6 A	7,200 VA	720 VA
240 VAC		30 A	3 A		
480 VAC		15 A	1.5 A		
600 VAC		12 A	1.2 A		

Characteristics

Degree of protection (see note 2)	IP67 (EN60947-5-1)
Durability (see note 3)	Mechanical:1,000,000 operations min. Electrical:500,000 operations min. (10 A at 250 VAC, resistive load)
Operating speed	0.1 m/s to 0.5 m/s
Operating frequency	30 operations/min max.
Rated frequency	50/60 Hz
Contact gap	2 x 2 mm min.
Direct opening force (see note 4)	19.61 N min. (EN60947-5-1)
Direct opening travel (see note 4)	20 mm min. (EN60947-5-1)
Full stroke	23 mm min.
Insulation resistance	100 MΩ min. (at 500 VDC) between terminals of same or different polarity, between each terminal and ground, and between each terminal and non-current-carrying metal part
Contact resistance	25 mΩ max. (initial value)
Rated insulation voltage (U_i)	600 V (EN60947-5-1)
Conventional enclosed thermal current (I_{the})	20 A (EN60947-5-1)
Dielectric strength (Uimp)	Impulse dielectric strength (U_{imp}) 4 kV (EN60947-5-1) between terminals of same or different polarity, between current-carrying metal parts and ground, and between each terminal and non-current-carrying metal part
Switching overvoltage	1,500 V max. (EN60947-5-1)
Conditional short-circuit current	100 A (EN60947-5-1)
Pollution degree (operating environment)	3 (EN60947-5-1)
Insulation class	Class I (with ground terminal)
Vibration resistance	Malfunction: 10 to 500 Hz, 0.65-mm single amplitude
Shock resistance	Destruction:1,000 m/s^2 min. (IEC68-2-27) Malfunction:300 m/s^2 min. (IEC68-2-27)
Ambient temperature	Operating:-40°C to 80°C (with no icing)
Ambient humidity	Operating:95% max.
Weight	Approx. 285 g (in the case of D4BS-15FS)

Note: 1. The above values are initial values.

2. Although the switch box is protected from dust, oil, or water penetration, do not use the D4BS in places where dust, oil, water, or chemicals may penetrate through the key hole on the head, otherwise Switch damage or malfunctioning may occur.

3. The durability is for an ambient temperature of 5°C to 35°C and an ambient humidity of 40% to 70%. Contact your OMRON sales representative for more detailed information on other operating environments.

4. These figures are minimum requirements for safe operation.

Contact Form (Diagrams Show State with Key Inserted)

Model	Contact form		Diagram	Remarks
D4BS-□5□S	1NC/1NO	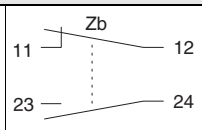	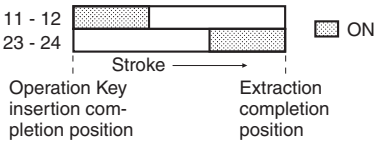	Only NC contact 11-12 has an approved direct opening mechanism. ⊖ Terminals 11-12 and 23-24 can be used as unlike poles.
D4BS-□A□S	2NC	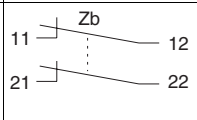	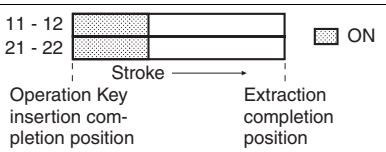	NC contacts 11-12 and 21-22 have an approved direct opening mechanism. ⊖ Terminals 11-12 and 21-22 can be used as unlike poles.

Note: The terminal numbers are in accordance with EN50013, and the contact symbols are in accordance with IEC947-5-1.

Nomenclature

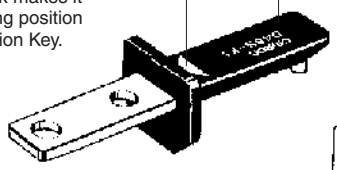

Operation Key
D4BS's exclusive-use Operation Key is provided to assure accurate switching operation.

Set Zone Mark
A triangular Set Zone Mark makes it easy to adjust the operating position when inserting the Operation Key.

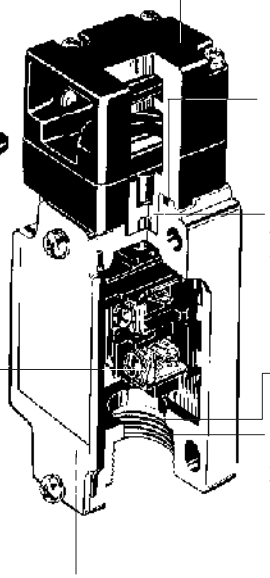

Head
The switch head is coated with easy-to-see red paint. The mounting direction of the switch head can be varied to any of the four directions.

Seal Ring (NBR)

Oil Seal (NBR)
The operation plunger employs an oil seal, with which the switch box meets the requirements of IP67 (the sealing capability of the Operation Key's insertion mouth is IP00).

Built-in Switch
A shearing force contact separating mechanism (NC contact) is employed, which positively pulls apart the contacts from each other by using shearing force if any abnormality such as contact welding should occur in the contact area.

There is a difference in level between the NC and NO terminal, which assures easy wiring.

Seal Packing (NBR)

Conduit Opening
Available in four different types of conduit threads: Pg 13.5, G1/2, or 1/2-14NPT, M20.

Ground Terminal Screw
A ground terminal is provided to improve safety. (Built into the Unit.)

Dimensions

Note: 1. All units are in millimeters unless otherwise indicated.
2. Unless otherwise specified, a tolerance of ±0.4 mm applies to all dimensions.
3. The conduit thread varies with the model as follows:.

Conduit thread	Model
Pg 13.5	D4BS-1□□S, D4BS-5□□S
G1/2	D4BS-2□□S, D4BS-6□□S
M20	D4BS-4□□S, D4BS-8□□S

Switches

1-conduit
D4BS-1□□S
D4BS-2□□S
D4BS-4□□S

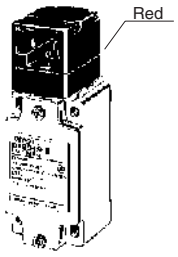

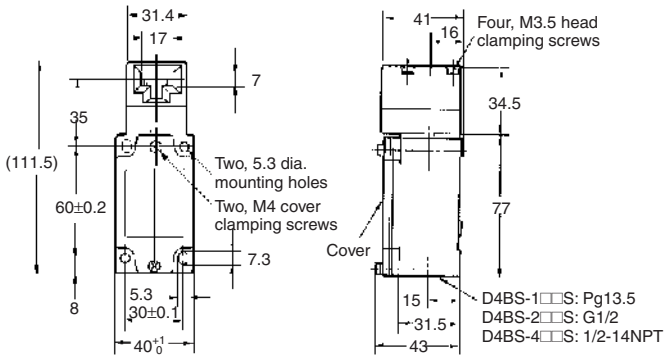

Operating characteristics	D4BS-1□□S D4BS-2□□S D4BS-4□□S
Key insertion force Key extraction force	19.61 N max. 19.61 N max.
Pretravel (PT)	10±5 mm
Direct opening force Direct opening stroke	19.61 N min. 20 mm min.

3-conduit
D4BS-5□□S
D4BS-6□□S
D4BS-8□□S

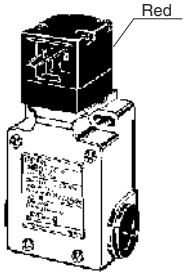

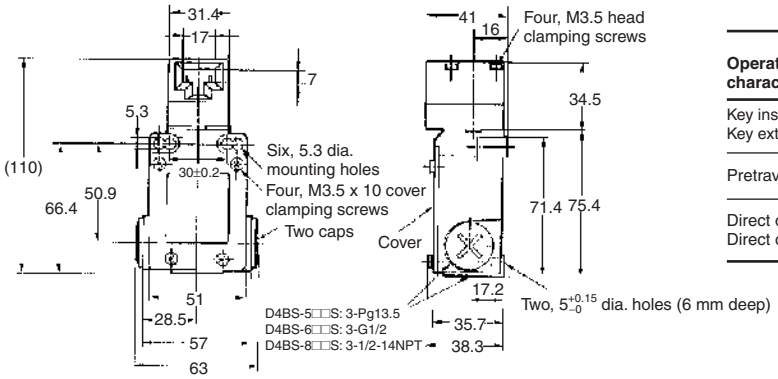

Operating characteristics	D4BS-5□□S D4BS-6□□S D4BS-8□□S
Key insertion force Key extraction force	19.61 N max. 19.61 N max.
Pretravel (PT)	10±5 mm
Direct opening force Direct opening stroke	19.61 N min. 20 mm min.

Operation Keys

D4BS-K1

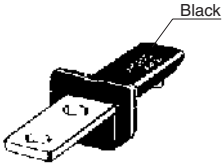

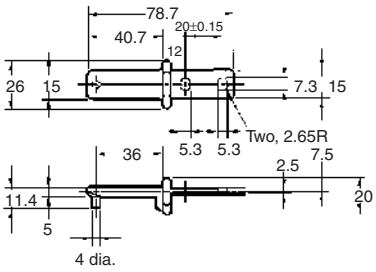

D4BS-K2

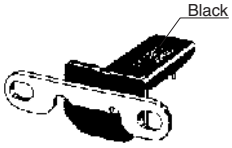

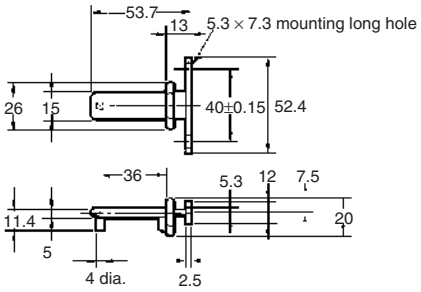

D4BS-K3

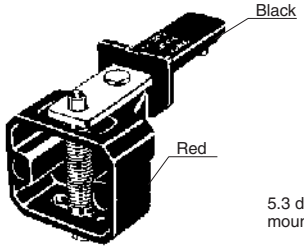

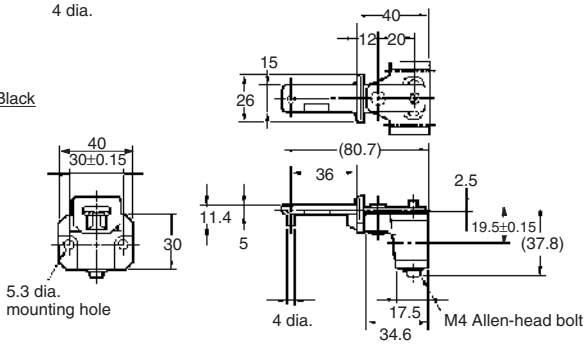

With Operation Key Inserted

Horizontal Mounting

D4BS-1□□S +D4BS-K1
D4BS-2□□S +D4BS-K1
D4BS-4□□S +D4BS-K1

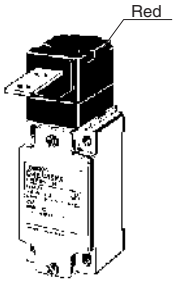

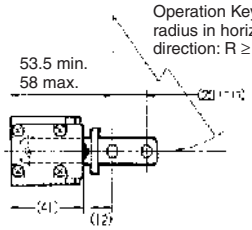

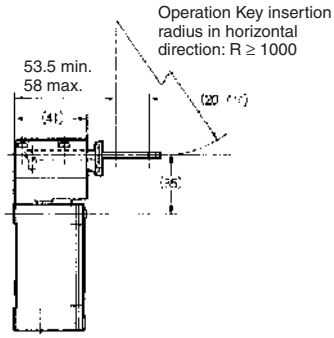

Vertical Mounting

D4BS-1□□S +D4BS-K2
D4BS-2□□S +D4BS-K2
D4BS-4□□S +D4BS-K2

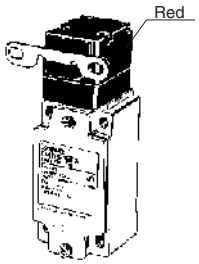

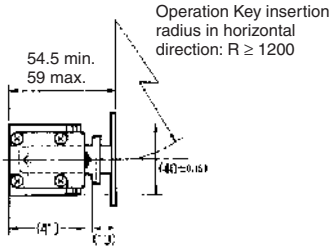

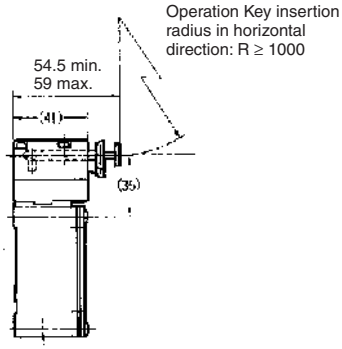

Adjustable Mounting (Horizontal)

D4BS-1□□S +D4BS-K3
D4BS-2□□S +D4BS-K3
D4BS-4□□S +D4BS-K3

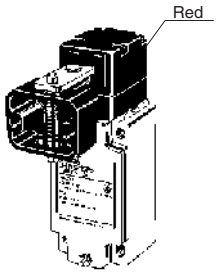

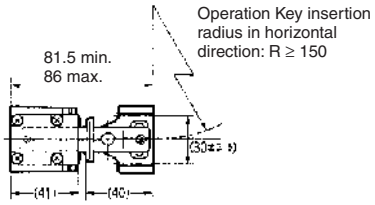

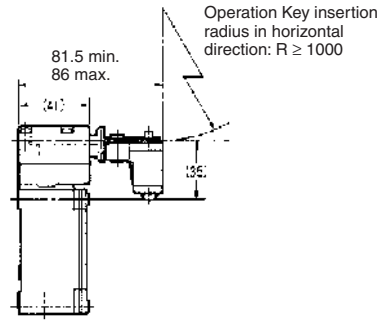

Note: "R" is the Operation Key insertion radius.

Note: Unless otherwise specified, a tolerance of ±0.4 mm applies to all dimensions.

Precautions

⚠ Caution

Do not dismount the Operation Key from the door intentionally and insert it to the Switch with the door open. Machine may start operating and injury or death may be caused.

Mount the Operation Key at a location where it will not come in contact with users when the door is opened or closed.

When operating the D4BS as a part of a safety category circuit to prevent injury, operate the NC contacts that have a direct opening mechanism in direct opening mode. For safety purposes, tighten the switch body and Operation Key with one-way screws or equivalents or install a switch protection cover and warning label for safety purposes to prevent easy removal of the D4BS.

Connect the fuse to the D4BS in series to prevent it from short-circuit damage. The value of the breaking current of the fuse must be calculated by multiplying rated current by 150% to 200%. When using the D4BS with EN ratings, use 10-A fuse Type gI or gG that complies with IEC60269.

Correct Use

Operating Environment

Make sure in advance that the environment is suitable, with no oil, water, or chemicals, as these may cause the seal to deteriorate, resulting in faulty contact, faulty isolation, current leakage, or burning.

Do not use the D4BS in the following locations:

- Locations subject to severe temperature changes
- Locations subject to high temperatures or condensation
- Locations subject to severe vibration
- Locations where the product may come into direct contact with processing waste or dust

Operation Key

Be sure to use a special Operation Key only. Do not operate the D4BS with anything other than the special Operation Key, otherwise the D4BS may break or the safety of the system may not be maintained.

Do not impose excessive force on the Operation Key inserted into the D4BS or drop the D4BS with the Operation Key inserted, otherwise the Operation Key may deform or break.

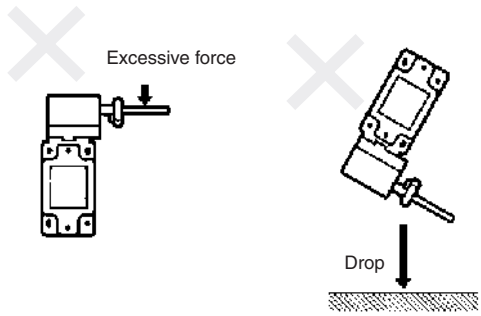

Secure the Operation Key with a one-way screw, or an equivalent, so that the Operation Key cannot be easily removed.

Securing the Door

If the Operation Key on the closed door is pulled outside the set zone by a force caused by vibration, the door's weight, or the door cushion rubber, the switch contact may be opened (causing the machinery to stop) or the D4BS may be damaged. Secure the door with hooks so that it will remain within the set zone.

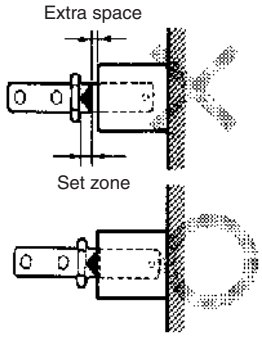

Mounting

Do not use the Switch as a stopper. Be sure to install a stopper as shown in the following illustration when mounting the Switch. The range of space "a" must be determined according to the available set zone of the Operation Key.

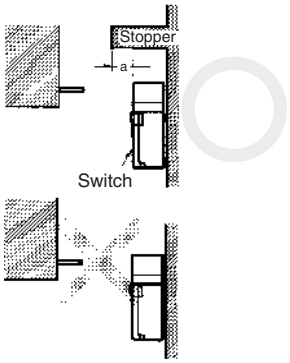

Refer to *Dimensions* for the mounting dimension of the Operation Key and mount the Operation Key correctly. The Operation Key will soon become damaged or worn out if it is not mounted correctly.

Make sure that the Operation Key can be inserted properly with a tolerance of ±0.5 mm in the upward, downward, left, or right direction, otherwise the D4BS may soon become damaged.

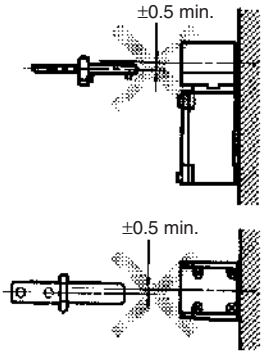

Other

Make sure that the D4BS is located outside the safety door and that no metal dust, oil, or chemical will be sprayed onto the D4BS. Otherwise, the D4BS may soon fail to operate due to the penetration of metal dust, oil, or chemical.

Tightening Torque

Be sure to tighten each screw of the D4BS properly, otherwise the D4BS may malfunction.

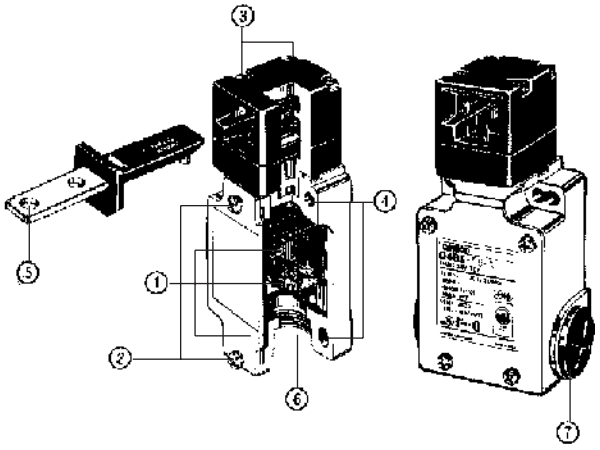

No.	Type	Torque
1	M3.5 terminal screw (including ground terminal screw)	0.59 to 0.78 N·m
2	Cover mounting screw (see note 1)	1.18 to 1.37 N·m
3	Head mounting screw	0.78 to 0.98 N·m
4	M5 body mounting screw (see note 2)	4.90 to 5.88 N·m
5	Operation Key mounting screw	2.35 to 2.75 N·m
6	Connector	1.77 to 2.16 N·m
7	Cap screw	1.27 to 1.67 N·m

Note: 1. Apply a torque of 0.78 o 0.88 N·m if the D4BS is a three-conduit model.

2. Apply a torque of 4.90 to 5.88 N·m in the case of an Allen-head bolt. If it is a pan head screw, apply a torque of 2.35 to 2.75 N·m.

Mounting Dimensions (M5)

Standard Model **Three-conduit Model**

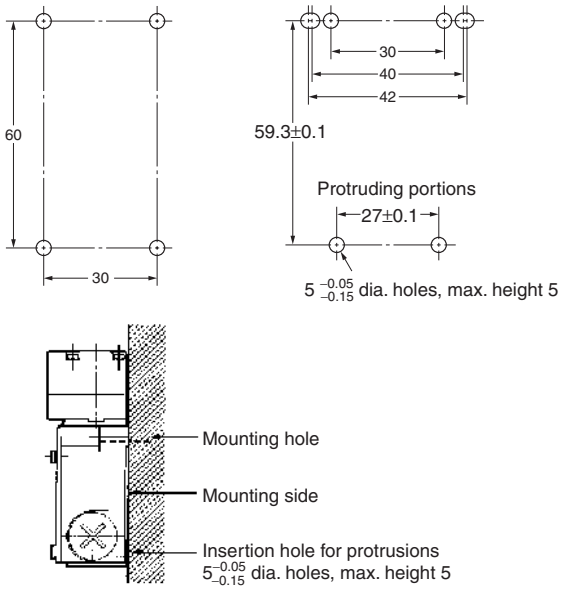

The D4BS can be mounted more securely by adding two protruding portions, each of which is 5 mm maximum in height and 5 $^{-0.05}/_{-0.15}$ mm in diameter as shown below.

Operating Key Mounting Dimensions

Horizontal Mounting

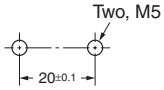

Vertical Mounting

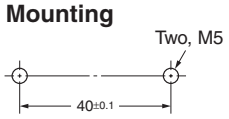

Adjustable Mounting (Horizontal)

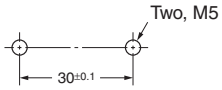

Changes in Head Mounting Direction

By removing the screws on the four corners of the head, the head can be reset in any of four directions. The head direction can be changed with or without the Operation Key inserted in the head. Make sure that no foreign materials penetrate through the head and that the head is tightened securely within the proper torque range.

Wiring

Do not connect the lead wires directly to the terminals. Connect the lead wires through insulation tubes and M3.5 crimp terminals. Tighten each terminal screw within the proper torque range.

The proper lead wire is AWG20 to AWG14 (0.5 to 2.5 mm^2) in size.

dz dia.: 3.7
D dia.: 4.5
B: 7.0
L: 20.2
F: 7.7
I: 9.0 (mm)

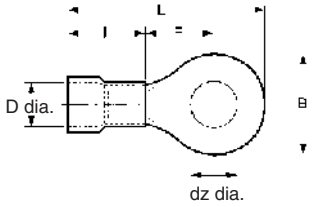

Make sure that all crimp terminals are correctly connected and located within the casing or cover as shown below.

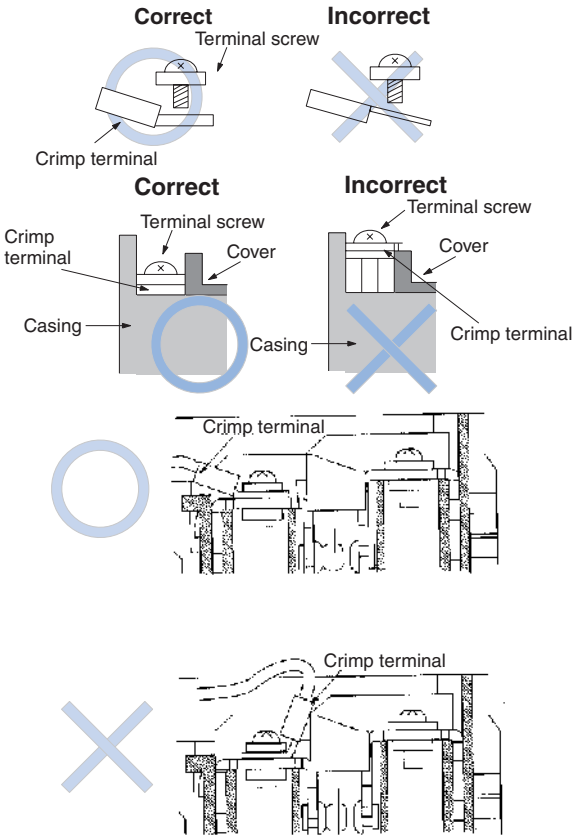

Connector

Tighten the connector to a suitable torque. Excessive tightening torque may damage the casing.

When using a 1/2-14NPT conduit, apply sealing tape between connector and conduit opening so that the enclosure will confirm to IP67. If using a Pg13.5 conduit, use an ABS-08 Pg13.5 connector or an ABS-12 Pg13.5 connector (manufactured by Nippon Flex).

Use a connector (SC Series, sold separately) suitable for the outer diameter of the cable.

When wiring a 3-conduit model, securely tighten the cap screw provided for unused conduit openings.

Maintenance and Repairs

The user must not maintain or repair equipment incorporating any D4BS model. Contact the manufacturer of the equipment for any maintenance or repairs required.