D38999/21
Box Mount Hermetic Receptacle
MIL-DTL-38999 Series III

How To Order: *MS*

Basic Specification	Connector Material / Finish	Insert Arrangement	Alternate Key Position
D38999	*N* - CRES, Nickel *Y* - CRES, Passivated	Per MIL-STD-1560; See Pages B2 - B4	*A, B, C, D, E* (*N* = Normal)

D38999	/21	Y	B	35	P	N

Shell Style
/21 - Box Mount

Shell Size

A - 9	*F* - 19
B - 11	*G* - 21
C - 13	*H* - 23
D - 15	*J* - 25
E - 17	

Contact Termination

P - Pin, Solder Cup	*S* - Socket, Solder Cup
X - Pin, Eyelet	*Z* - Socket, Eyelet
C - Pin, PCB Flex Feedthrough	*D* - Socket, PCB Flex Feedthrough

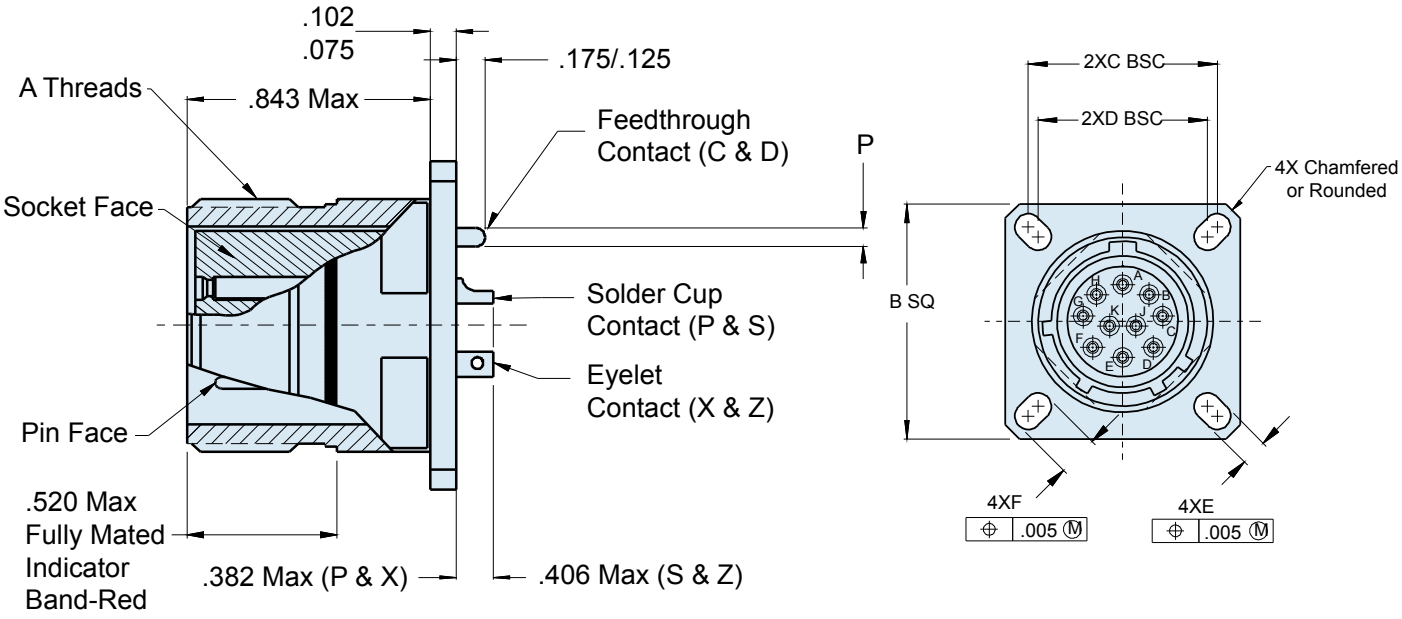

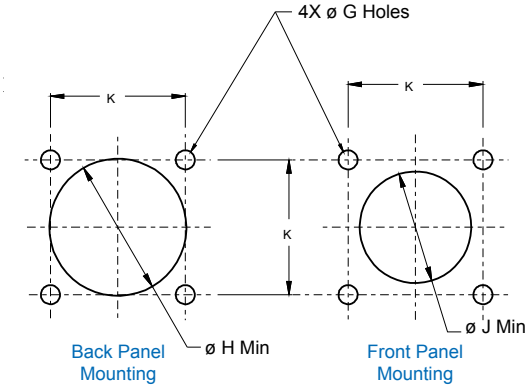

Dimensions in Inches (millimeters) are subject to change without notice.

© 2013 Glenair, Inc.