THIS DRAWING IS A CONTROLLED DOCUMENT.

LOC	DIST
HJ	-

REVISIONS

P	LTR	DESCRIPTION	DATE	DWN	APVD
	A2	Doc change D02239-DOK51 to C-1462033-2	30Jan2006	UKo	HD
	A3	change marking	28Jul2006	UKo	HD
	A4	REVISED PER ECO-11-005150	23MAR2011	RK	HMR
	A5	REVISED PER ECO-13-009556	14JUN2013	UKo	AK

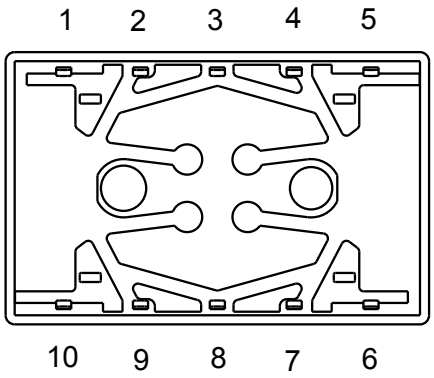

Relay - bottom view

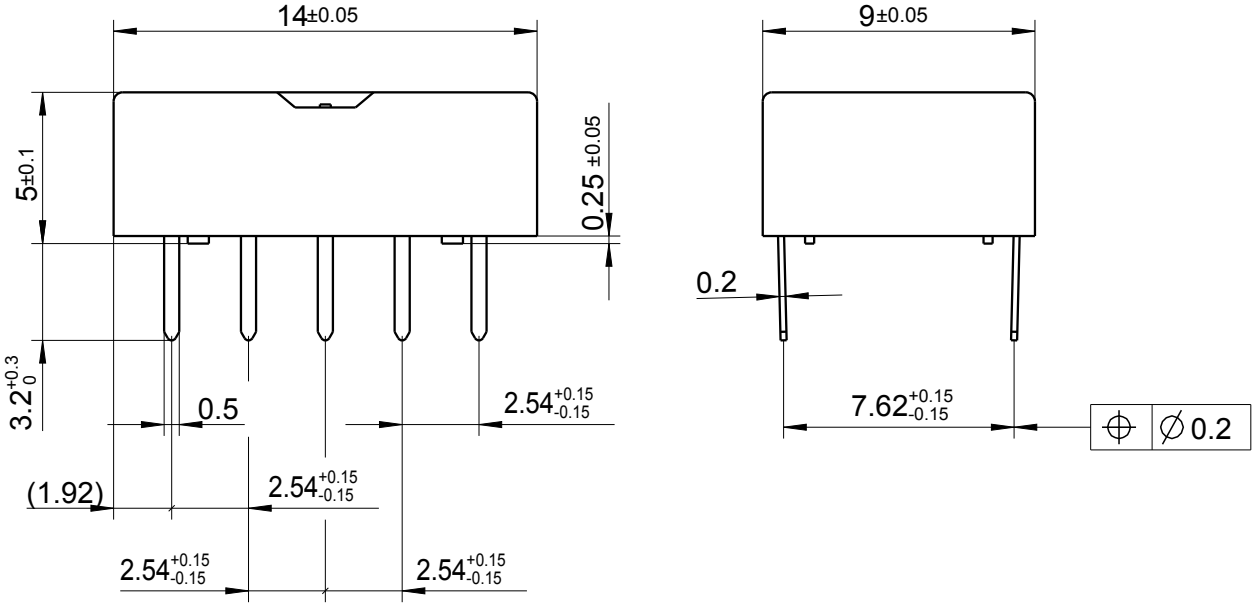



xxxx = Relay type
zz = nominal voltage
YYWW = Date code

THIS DRAWING IS UNPUBLISHED. © COPYRIGHT 2006 ALL RIGHTS RESERVED. RELEASED FOR PUBLICATION 2006

DRAWING ALIAS: D02239-DOK51

DIMENSIONS: mm

TOLERANCES UNLESS OTHERWISE SPECIFIED: DIN 7168-m

0 PLC	±-
1 PLC	±-
2 PLC	±-
3 PLC	±-
4 PLC	±-
ANGLES	±-

DWN	AB 9124	23AUG1995
CHK	HD 9121	23AUG1995
APVD	HD 9121	23AUG1995

PRODUCT SPEC: -

APPLICATION SPEC: -

WEIGHT: -

MATERIAL: -

FINISH: -

TE Connectivity

NAME: FP2-Relay Dimensions

SIZE	CAGE CODE	DRAWING NO	RESTRICTED TO
A4	00779	C-1462033-2	-

CUSTOMER DRAWING

SCALE 4:1 SHEET 1 OF 1 REV A5